1000 GALLON
.09 Fast Tank

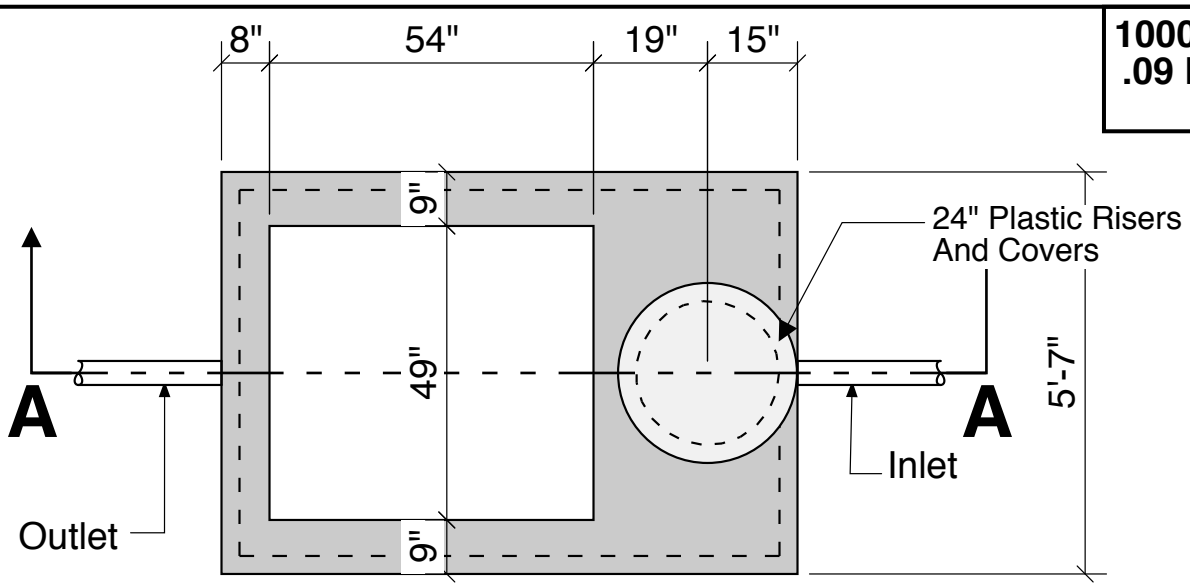

Top View

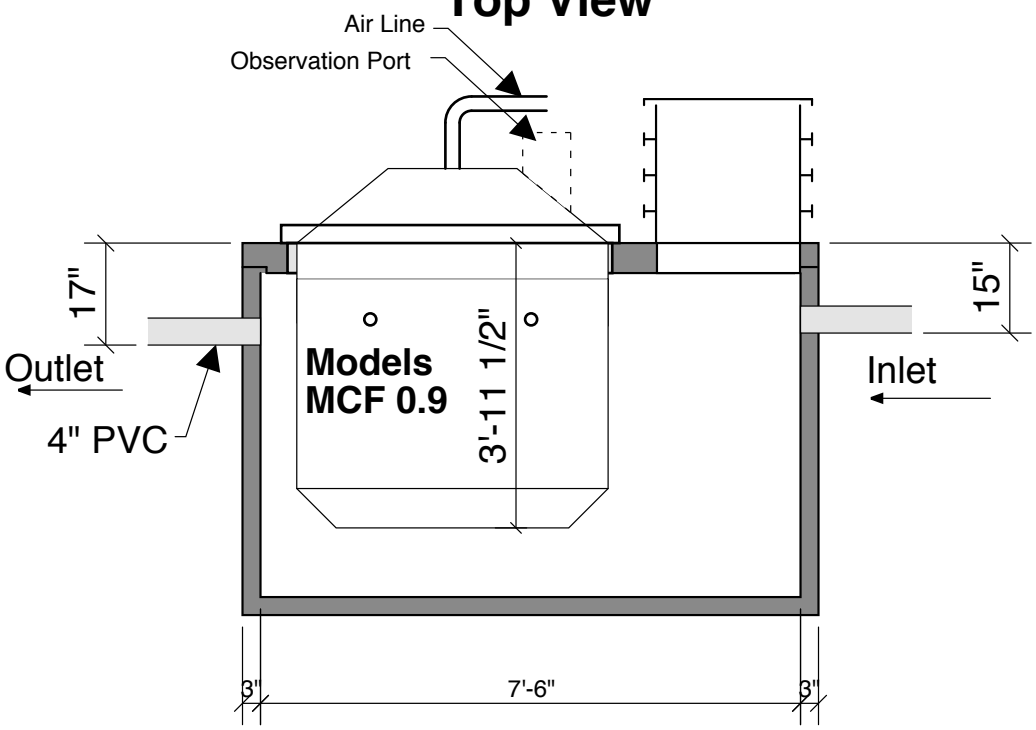

Section A-A

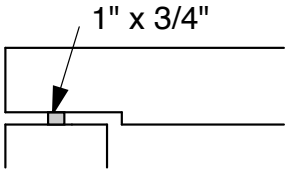

Typical Cover Detail

DESIGN NOTES
° TANK TO ASTM 1227
° W/C RATIO 0.45 OR LESS
° 60" MAX. BURY DEPTH OVER TOP COVER
° RANDOM VACUUM OR WATER TESTING BY CREST

INSTALLATION NOTES:
° PLUMBING CONTRACTOR TO SEAL FAST UNIT TO TANK COVER. PLUMBER OR DEALER TO PROVIDE SEMI-ANNUAL INSPECTIONS OR SERVICE.

EFFLUENT FQUALITY (AVERAGE VALUE)
° LESS THAN 30 MG/L B.O.D.
° LESS THAN 30 MG/L S.S.
° LESS THAN 30 MG/L PHOSHORUS

APPLIED REFERENCE NO.
001, 002, 003, 004, 005, 07B, 008, 009, 012, 014, 017, 018, 019, 020, 021, 022, 022A, 022B, 023

Crest Precast, Inc.
La Crescent, MN & Barneveld, WI
800-658-9045

Scale		Drawn By:	KGT
Date	.	Revision	
Project:	FAST TANK 1000 GALLON MEDIUM		
Contractor:		Drawing Number	MODEL 1000-M .09