F:\ RD \ R14 \ DWG1 \ 2024

Ra | JIS

0.2 | 1.6 | 6.3 | 25

GENERAL TOLERANCE

0.5~5	± 0.1
6~30	± 0.2
31~120	± 0.3
121~320	± 0.5
321~1000	± 0.8

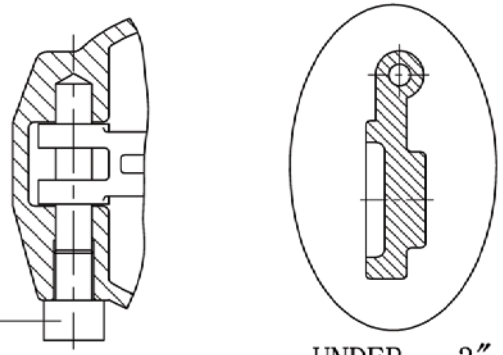

UNDER – 3″

DN	d	L	H	D	C	G	T
15	15	130	65	95	65	45	14
20	20	150	70	105	75	58	16
25	25	160	75	115	85	68	16
40	40	200	107	150	110	88	16
50	50	230	120	165	125	102	18
65	65	290	135	185	145	122	18
80	80	310	147	200	160	138	20
100	100	350	169	220	180	158	20
125	125	400	190	250	210	188	22
150	150	480	213	285	240	212	22
200	200	600	253	340	295	268	24
250	250	730	279	405	355	320	26
300	300	850	312	460	410	378	26

unit:mm

NPS	d	L	H	D	C	G	T
1/2"	0.59	5.12	2.56	3.74	2.56	1.77	0.55
3/4"	0.79	5.91	2.76	4.13	2.95	2.28	0.63
1"	0.98	6.3	2.95	4.53	3.35	2.68	0.63
1-1/2"	1.57	7.87	4.21	5.91	4.33	3.46	0.63
2"	1.97	9.06	4.72	6.5	4.92	4.02	0.71
2-1/2"	2.56	11.42	5.31	7.28	5.71	4.8	0.71
3"	3.15	12.2	5.79	7.87	6.3	5.43	0.79
4"	3.94	13.78	6.65	8.66	7.09	6.22	0.79
5"	4.92	15.75	7.48	9.84	8.27	7.4	0.87
6"	5.91	18.9	8.39	11.22	9.45	8.35	0.87
8"	7.87	23.62	9.96	13.39	11.61	10.55	0.94
10"	9.84	28.74	10.98	15.94	13.98	12.6	1.02
12"	11.81	33.46	12.28	18.11	16.14	14.88	1.02

unit:in

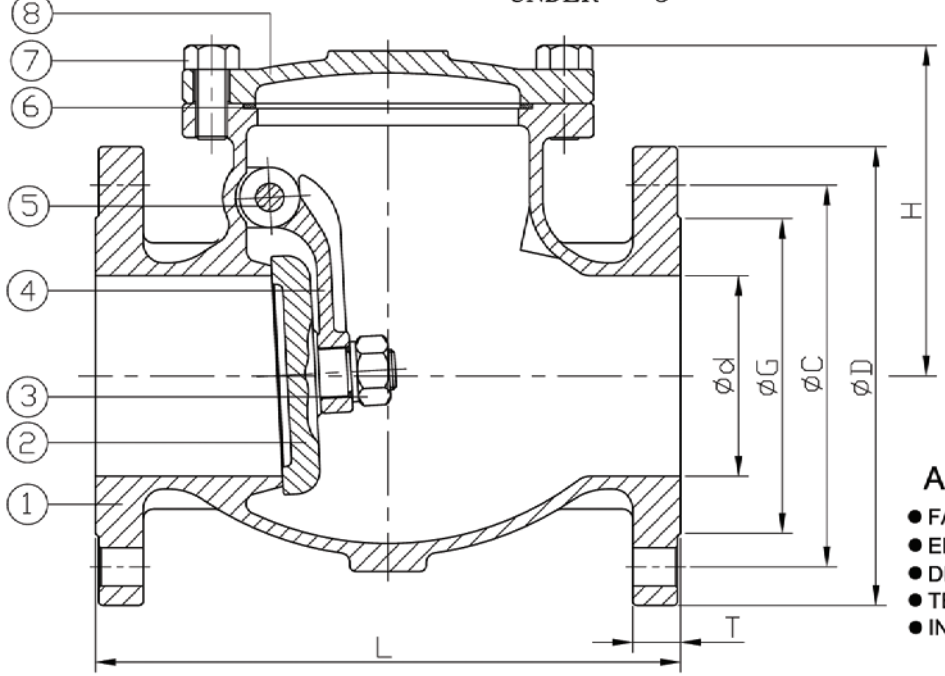

4″UP

ITEM	PARTS	MATERIAL	
1	BODY	1.4408	1.4308
2	DISC		
3	NUT	SS 304	
4	ARM HINGE	1.4408	1.4308
5	HINGE PIN	SS 316	SS 304
6	GASKET	PTFE (OR NO ASBESTOS)	
7	BOLT	ASTM A194-B8 / A194-2H	
8	BONNET	1.4408	1.4308
9	BOLT	SS 304	

APPLICATIONS:

- FACE TO FACE DIMENSIONS:DIN3202 F1
- END FLANGE DIMENSIONS:DIN2633
- DESIGN:ANSI B16.34
- TEST:API 598
- INVESTMENT CASTING BODY

SHELL (BY WATER)		450 PSI
		32 kg/cm^2
SEAT	BY WATER	315 PSI
		22 kg/cm^2
	BY AIR	80 PSI
		6 kg/cm^2

Revise	Description	Date	Approve
3			
2			
1			

CHECK BY	DRAWING BY	DATE	SPECIFICATION	Swing Check Valve PN16
		Nov.09.2005	MATERIAL	1.4408
			PROCESS/Nr.	
			UNIT / SCALE	mm

DRAWING NO. 2024003SL – 05

TECH SHEET 1875