OMNI-DIRECTIONAL SOLUTIONS SINCE 1909

9424 OMNITRACK HIGH CAPACITY BALL TRANSFER UNIT

REVISION # 01

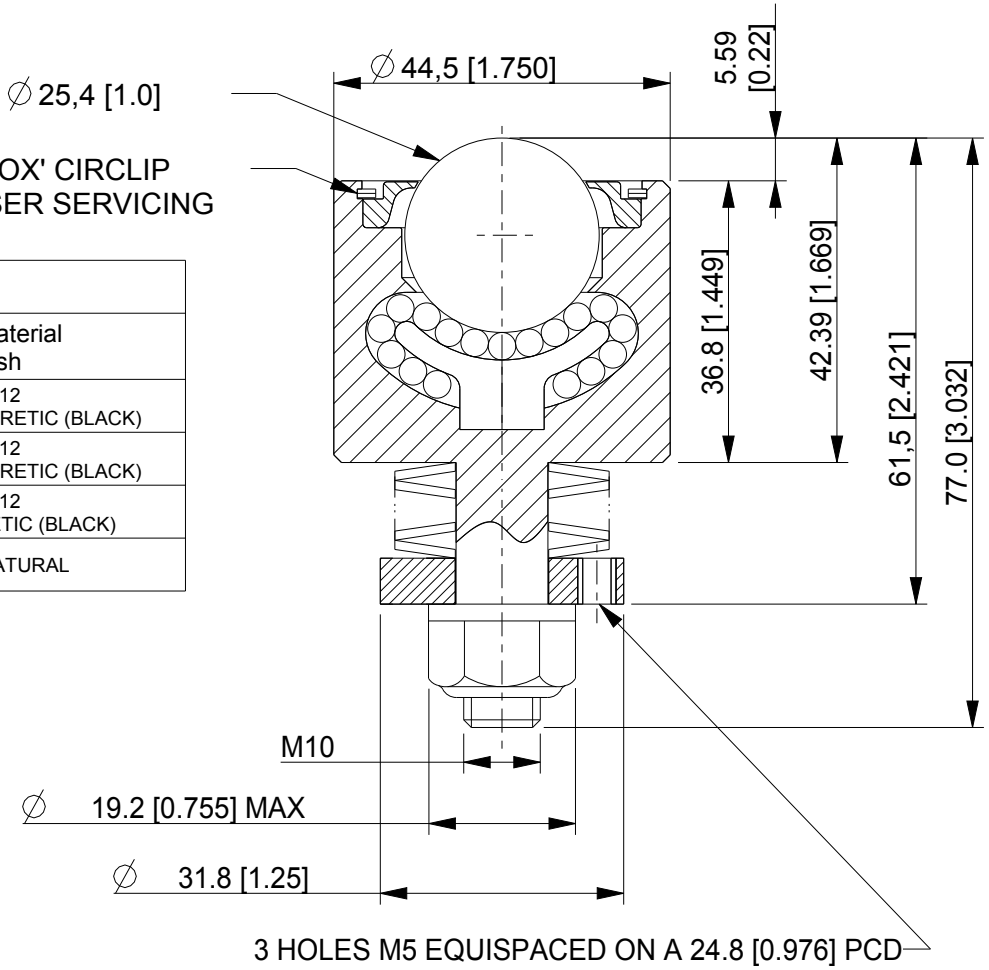

Available Material Options			
Part #	Load Bearing Internal Materials	Ball Material	Casing Material & Finish
9424	AISI 52100	AISI 52100	AISI 1012 ZINC/ELECTROPHORETIC (BLACK)
9424A	AISI 52100	AISI 440	AISI 1012 ZINC/ELECTROPHORETIC (BLACK)
9424Z	AISI 440	AISI 440	AISI 1012 ELECTROPHORETIC (BLACK)
9424SS	AISI 440	AISI 440	AISI 304 - NATURAL

SPRING MATERIAL FOR ALL OPTIONS = LIGHTLY GREASED CARBON STEEL

~ Operating temperature -20° C + 125° C (continuous)

NOTES:
1. SUPPORTS A LOAD OF 89 Kg / 195 Lbs
2. MAXIMUM RECOMMENDED DEFLECTION 2.7mm [0.104"]
3. 204 Kg / 500 Lbs LOAD AT MAXIMUM DEFLECTION

ALL DIMENSIONS IN mm [inch]
IF VIEWED AS PDF, DO NOT SCALE
IF VIEWED AS DWG, SCALE 1 : 1
TOLERANCE ± 0,25
QMF 31 ISSUE 01 : 22/06/2012

OMNITRACK
RODBOROUGH COURT
STROUD, GL5 3LR, ENGLAND

Telephone: +44 (0)1453 873 345
Fax: +44 (0)1453 878 500
info @ omnitrack.com
www.omnitrack.com

THIS DOCUMENT CONTAINS OMNITRACK PROPERTY AND CONFIDENTIAL INFORMATION. IT IS LOANED FOR LIMITED PURPOSES ONLY AND REMAINS THE PROPERTY OF OMNITRACK. IT MAY NOT BE REPRODUCED IN WHOLE OR PART OR DISCLOSED TO THIRD PARTIES WITHOUT THE PRIOR WRITTEN CONSENT OF OMNITRACK. THE DOCUMENT IS TO BE RETURNED TO OMNITRACK UPON REQUEST AND IN ALL EVENTS UPON COMPLETION OF THE USE FOR WHICH IT WAS LOANED