Corrected to MARCH 1962 PARTS LIST No. 5539-1

KODAK MOTORMATIC 35 CAMERA

and

FIELD CASE

This revised parts list supersedes parts list No. 5539

ORDER PARTS FROM APPARATUS PARTS SERVICE
EASTMAN KODAK COMPANY, ROCHESTER 4, N.Y.

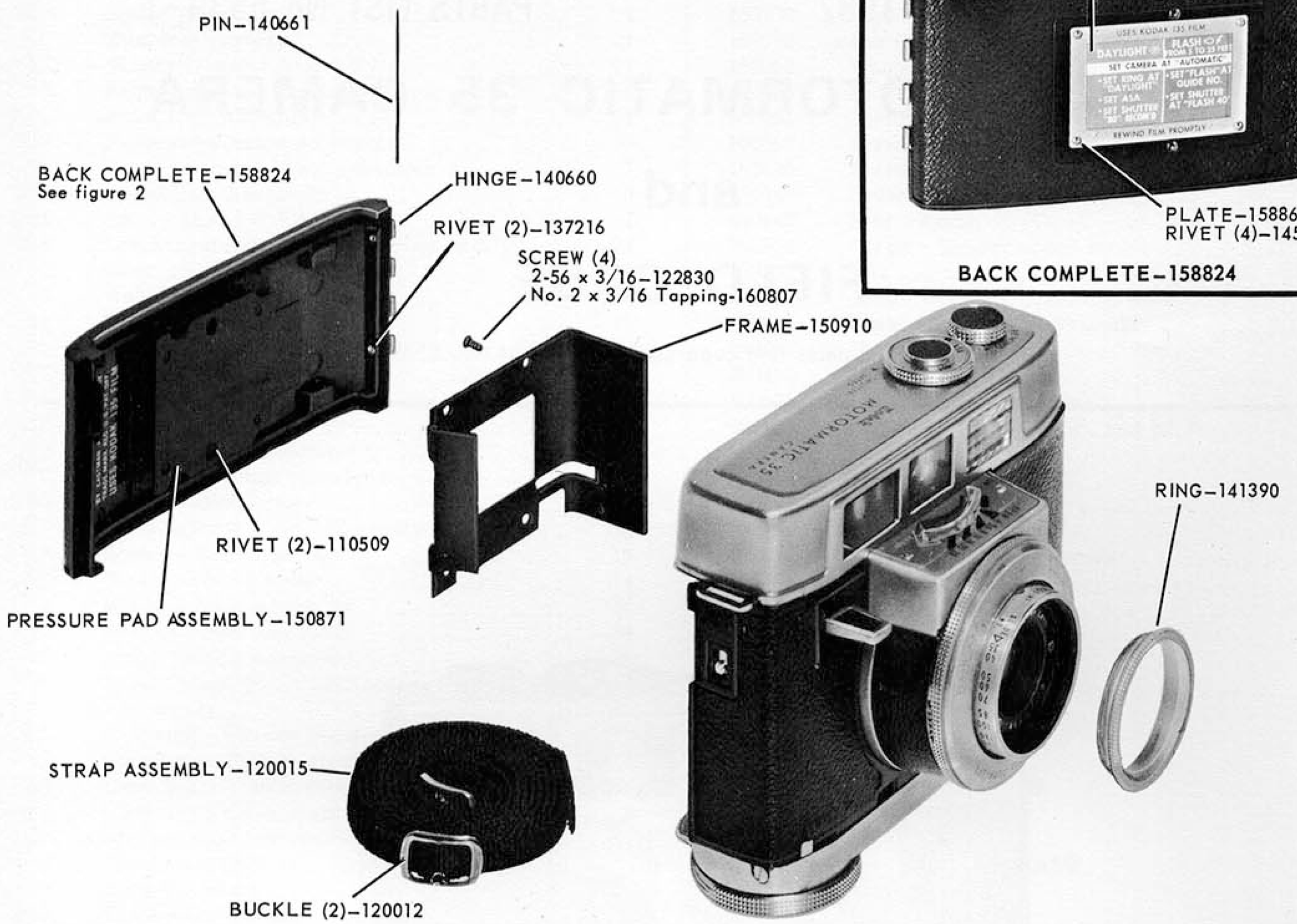
PIN–140661
BACK COMPLETE–158824
See figure 2
HINGE–140660
RIVET (2)–137216
SCREW (4)
2-56 x 3/16–122830
No. 2 x 3/16 Tapping-160807
FRAME–150910
RIVET (2)–110509
PRESSURE PAD ASSEMBLY–150871
RING–141390
STRAP ASSEMBLY–120015
BUCKLE (2)–120012
1

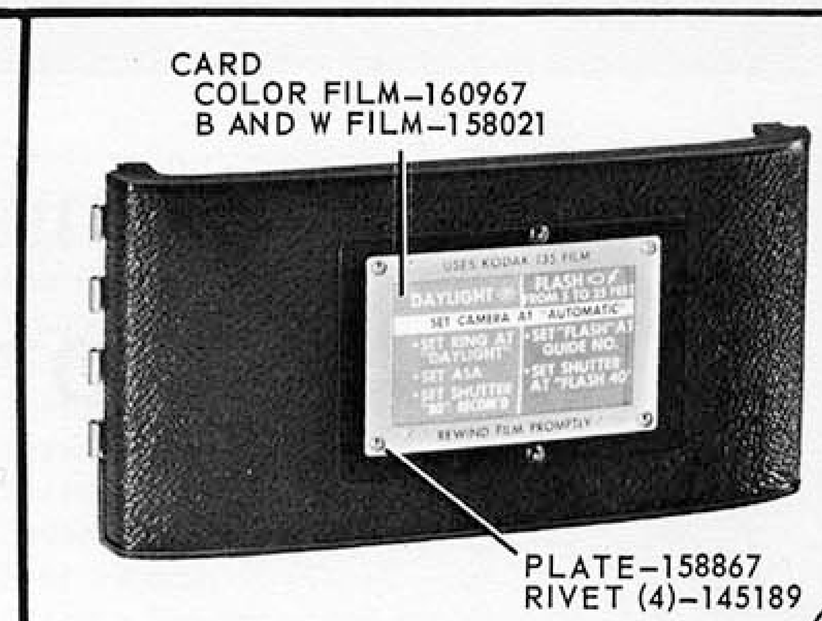
CARD
COLOR FILM–160967
B AND W FILM–158021
PLATE–158867
RIVET (4)–145189
BACK COMPLETE–158824
2

INSERT–151901
REWIND KNOB ASSEMBLY–150873
Includes Insert
HOUSING COMPLETE–157953
See figures 4 through 8
SCREW–130291
SCREW–151604
3

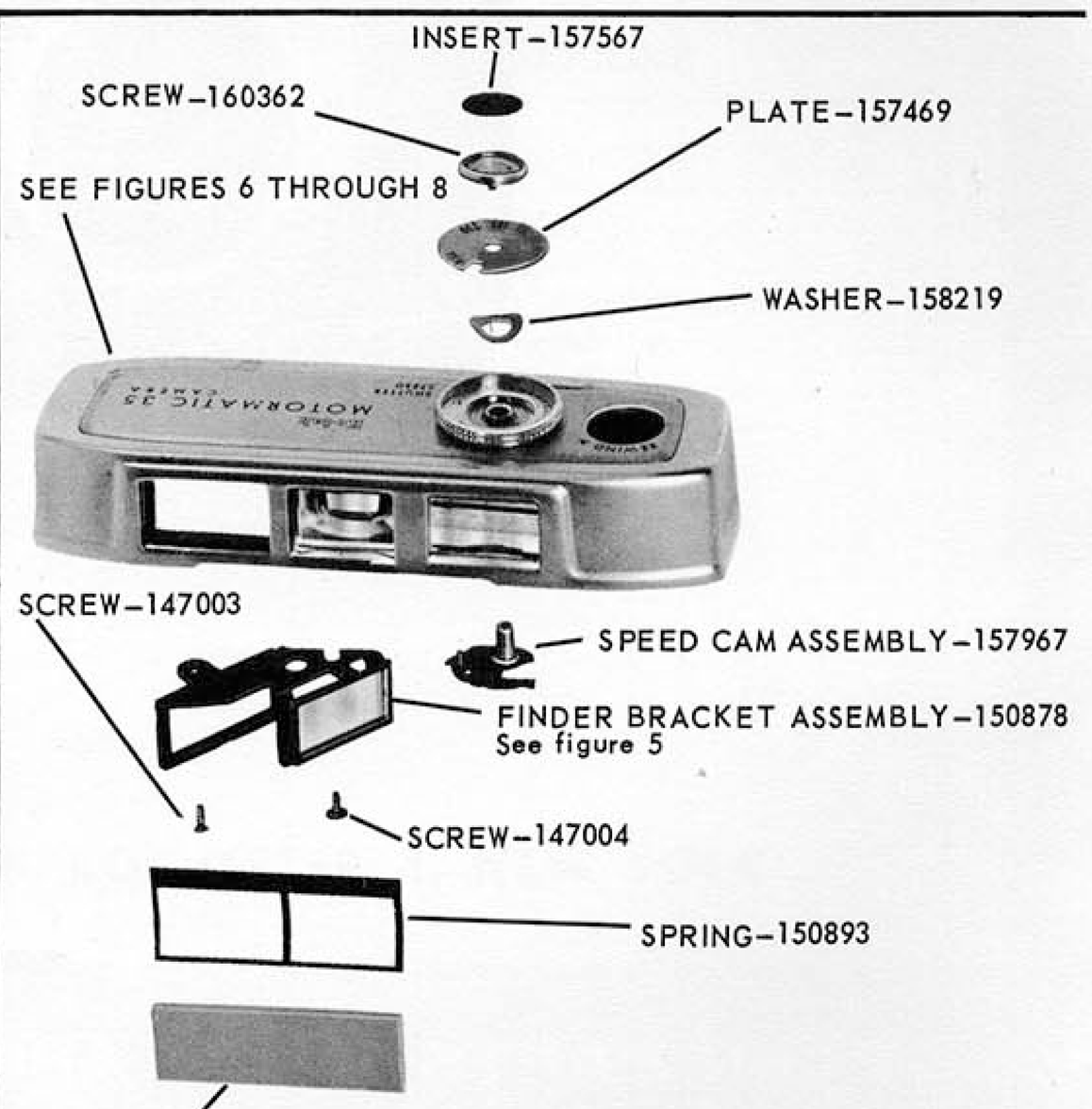
INSERT–157567
SCREW–160362
PLATE–157469
SEE FIGURES 6 THROUGH 8
WASHER–158219
SCREW–147003
SPEED CAM ASSEMBLY–157967
FINDER BRACKET ASSEMBLY–150878
See figure 5
SCREW–147004
SPRING–150893
WINDOW–150894
4

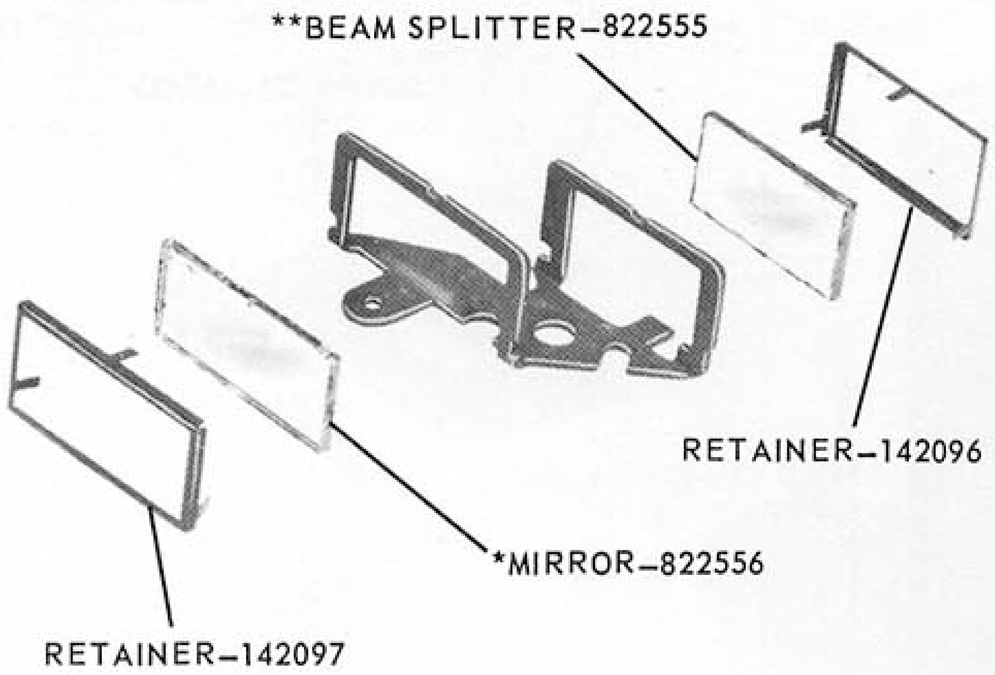

**The surface of the beam splitter upon which the image meets with the pencil point should face toward the rear of the camera.

*The surface of the mirror upon which the image meets with the pencil point should face toward the front of the camera.

FINDER BRACKET ASSEMBLY–150878

5

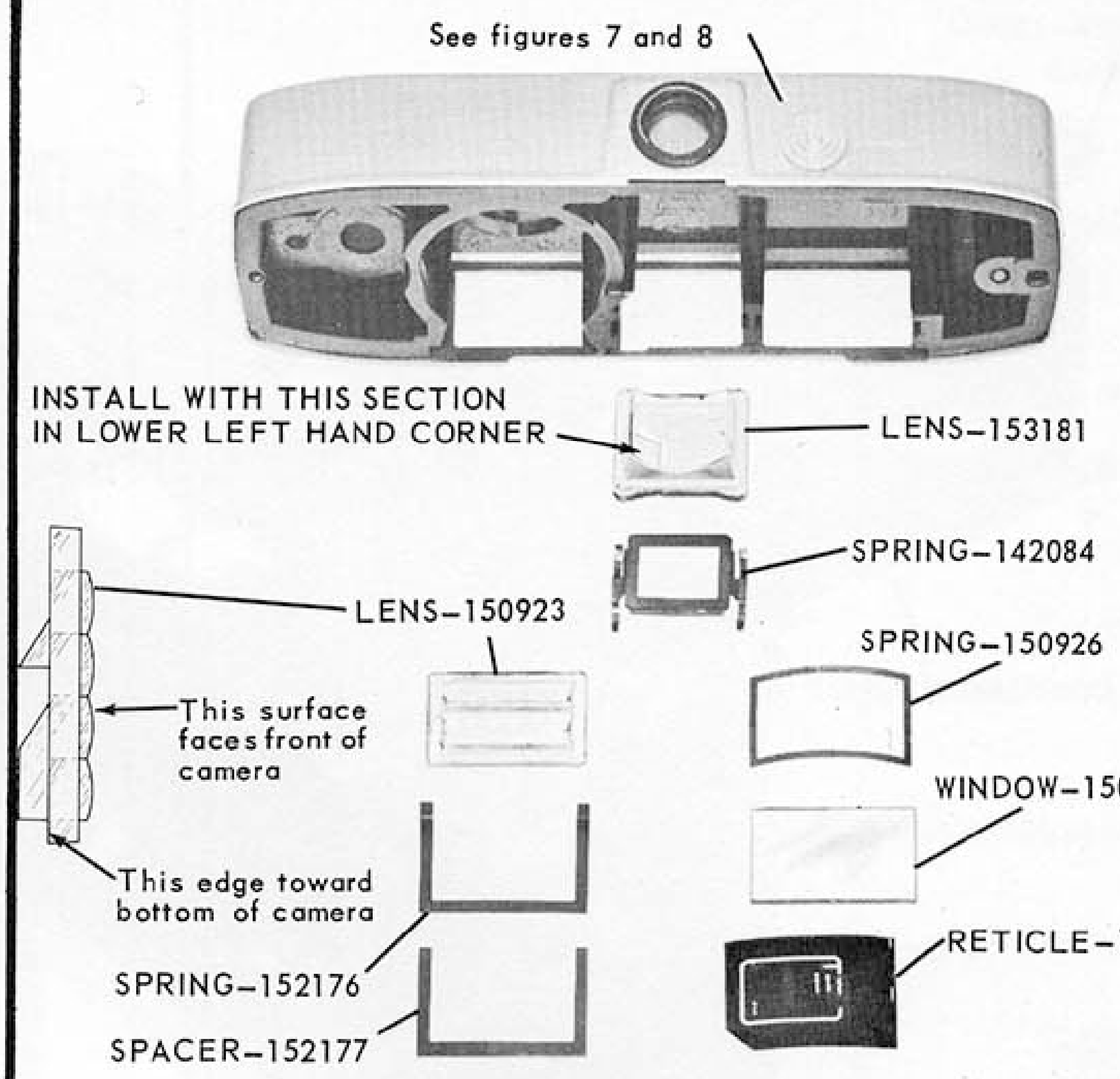

HOUSING COMPLETE–157953

6

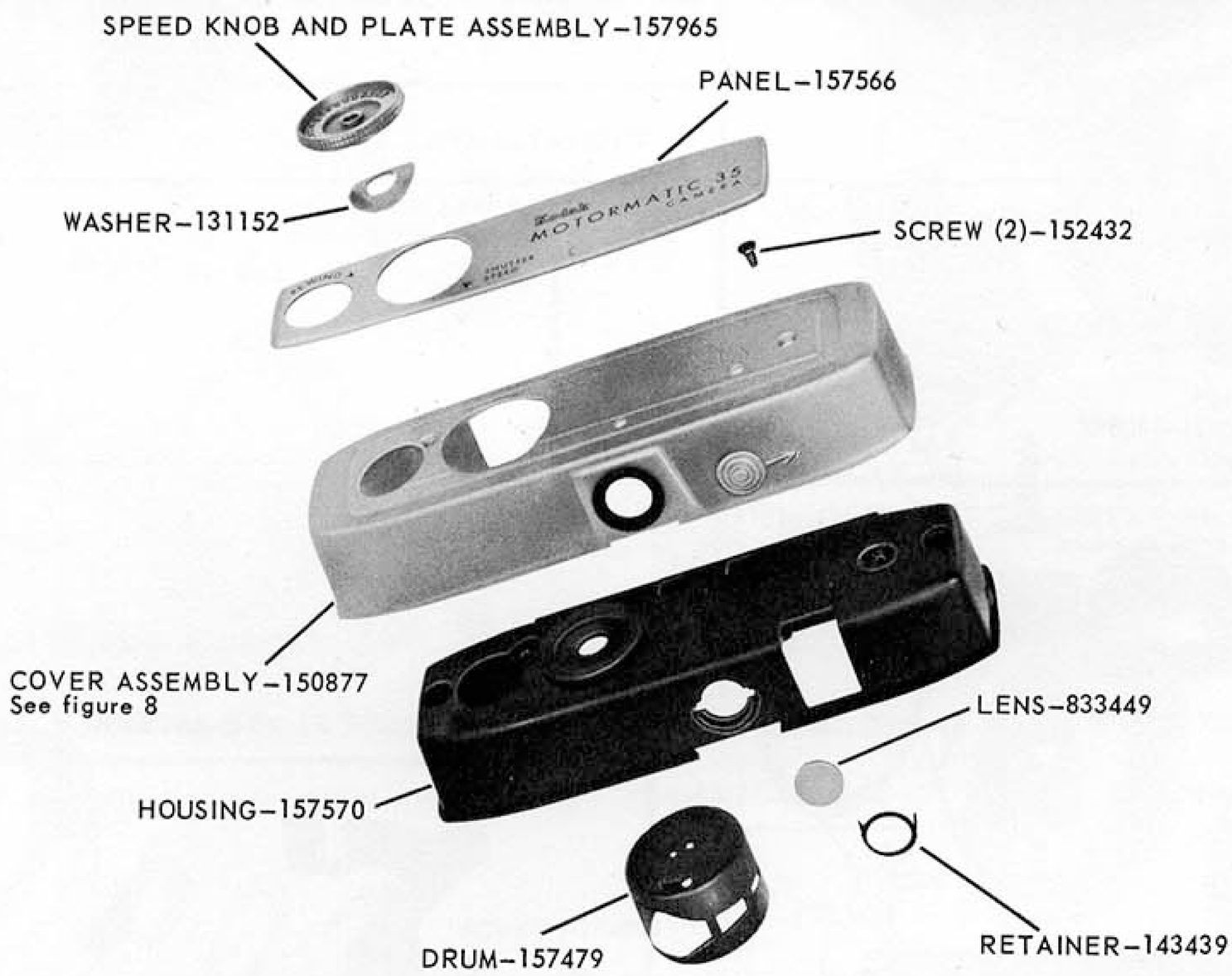

7

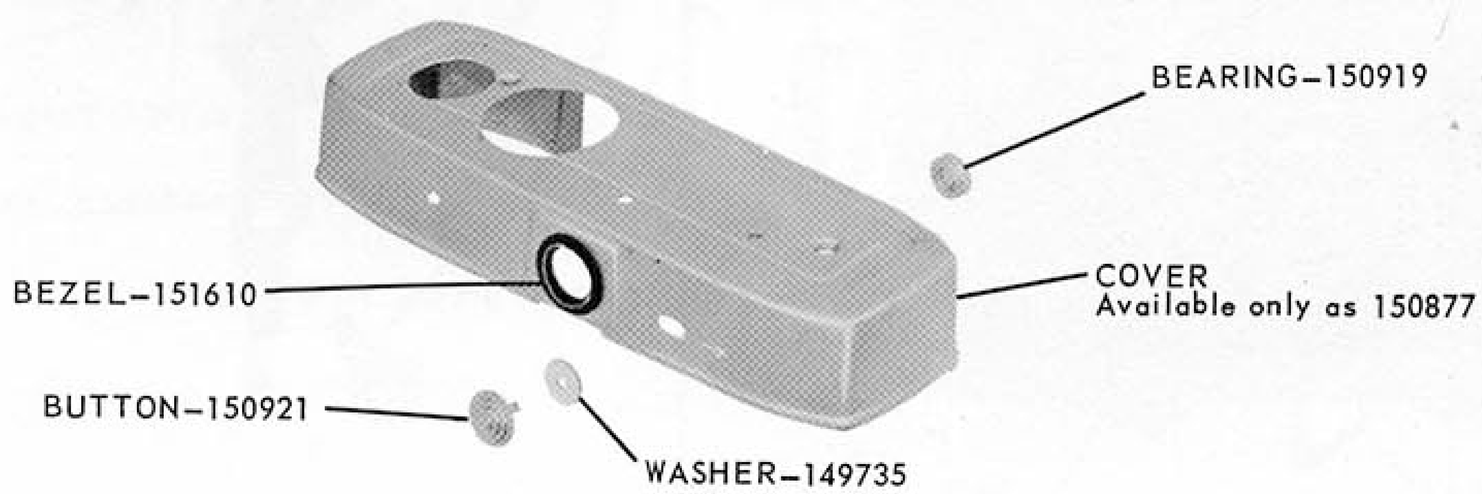

COVER ASSEMBLY–150877

8

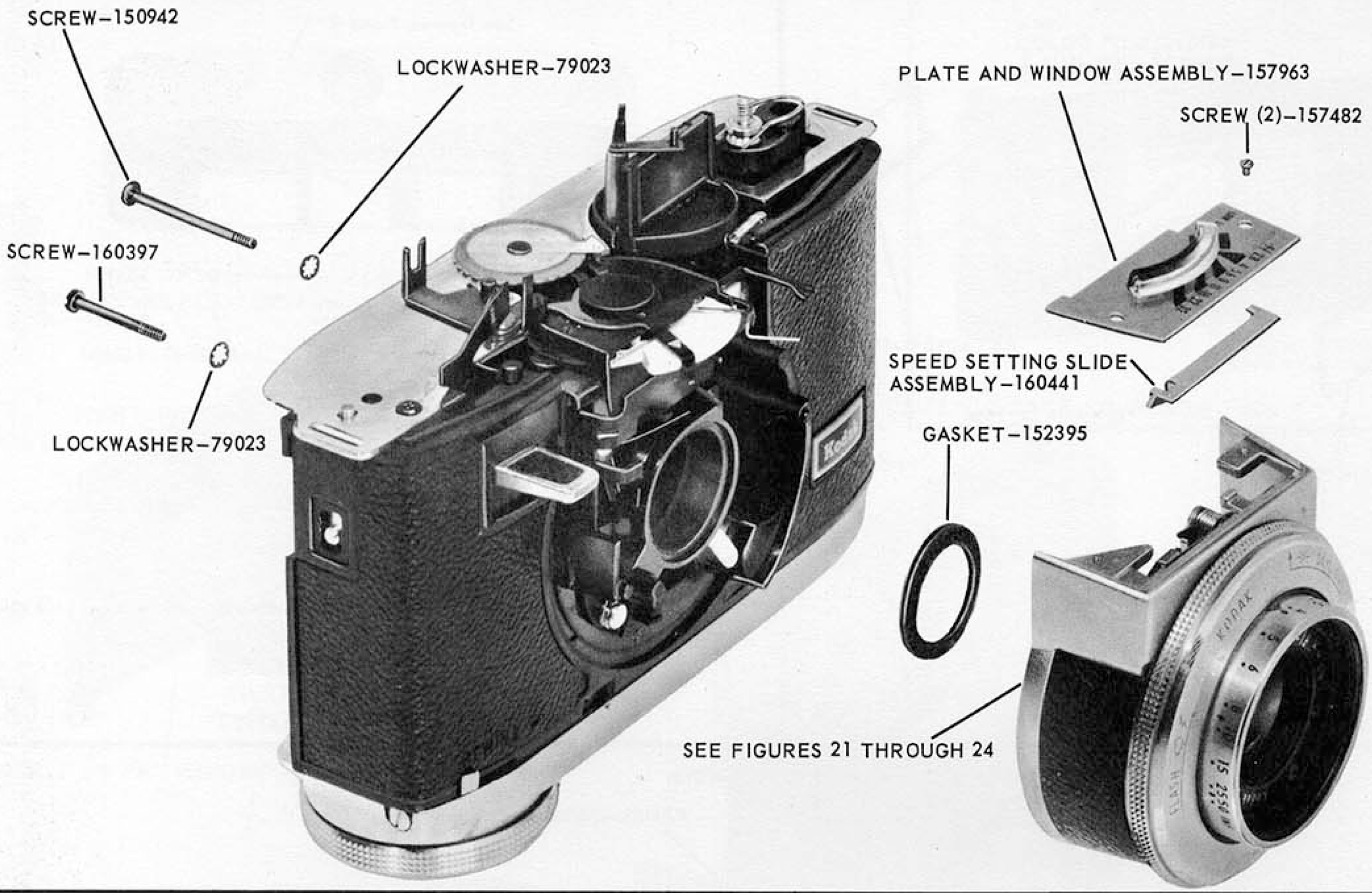

9

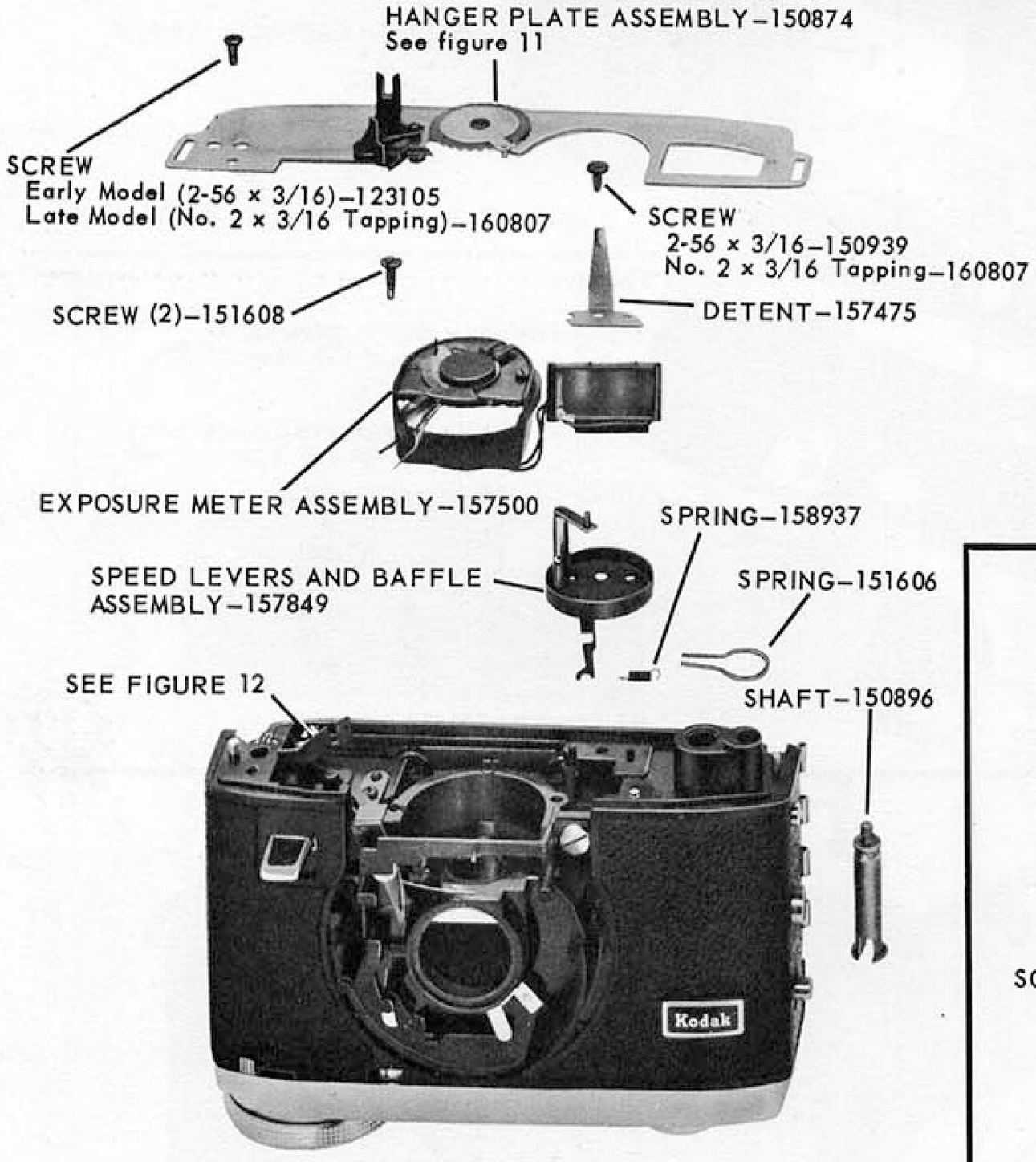

10

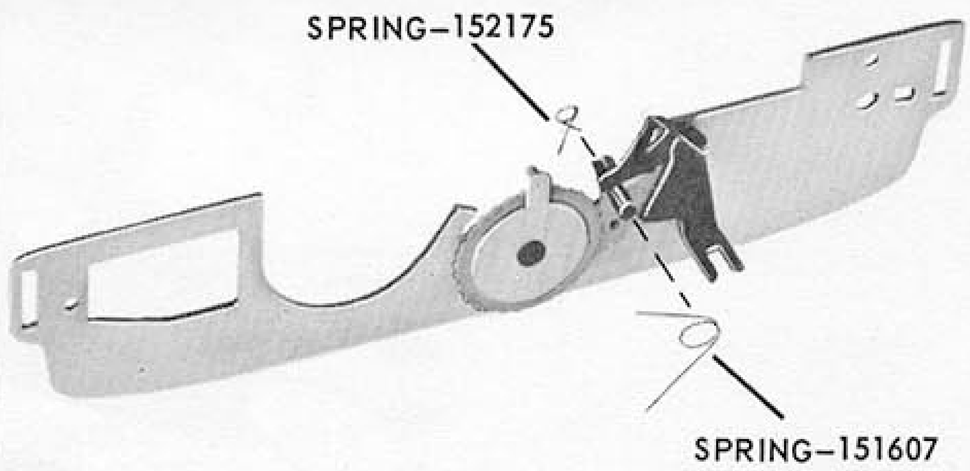

HANGER PLATE ASSEMBLY–150874

11

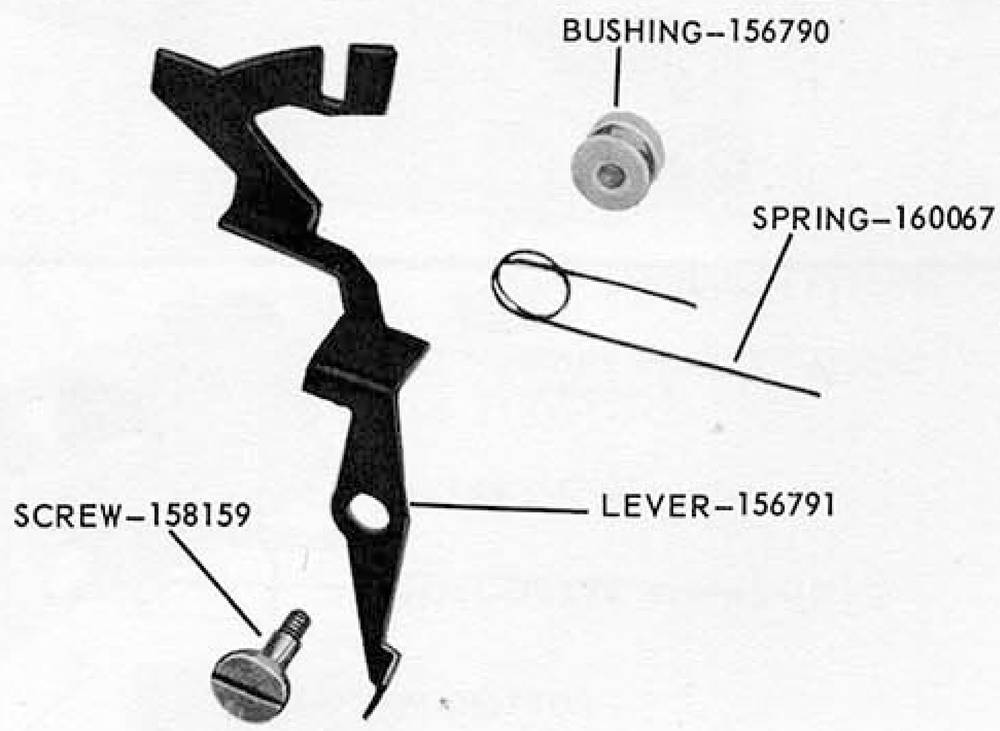

12

Always give PART NUMBER and NAME when ordering parts

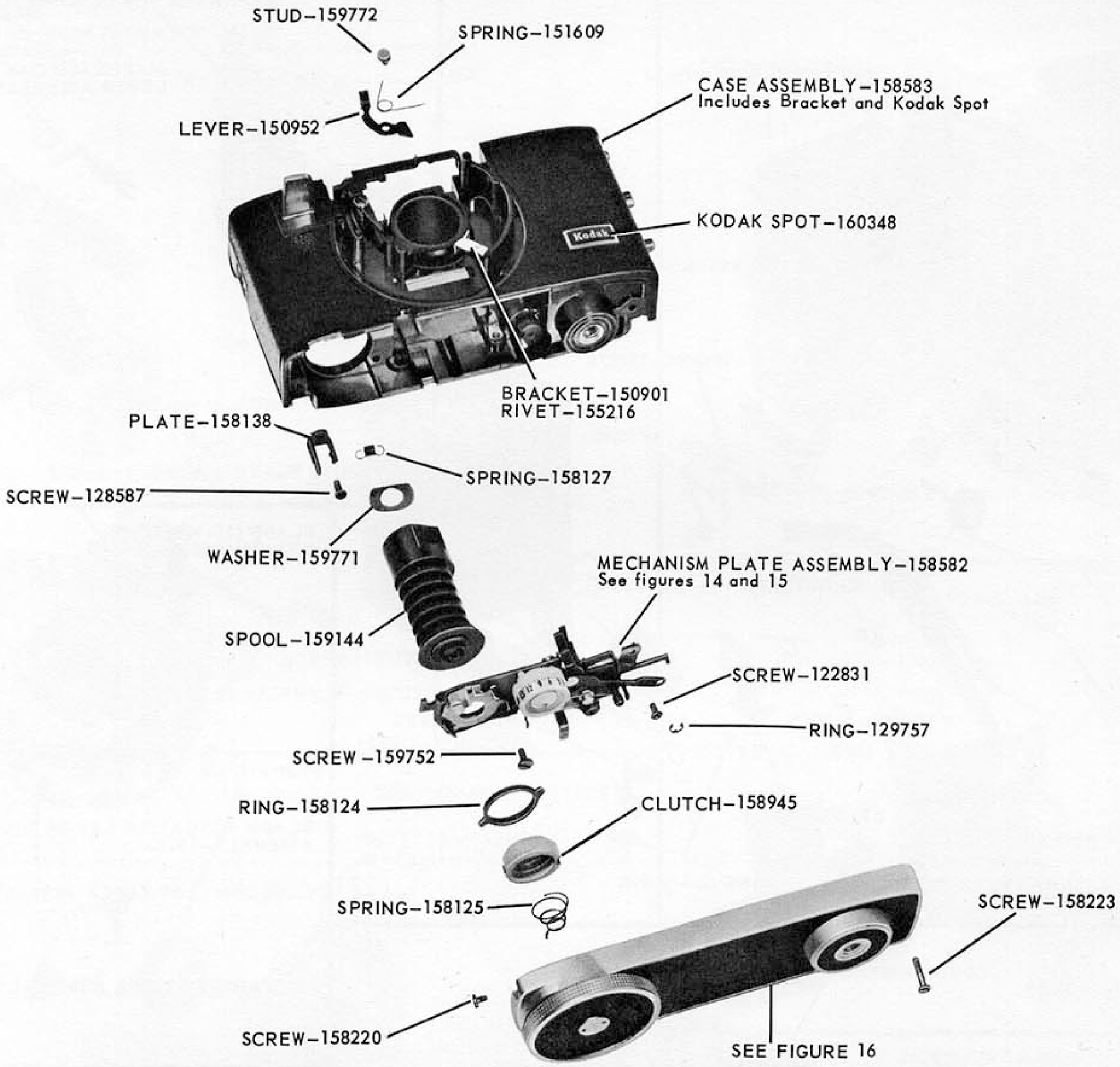

13

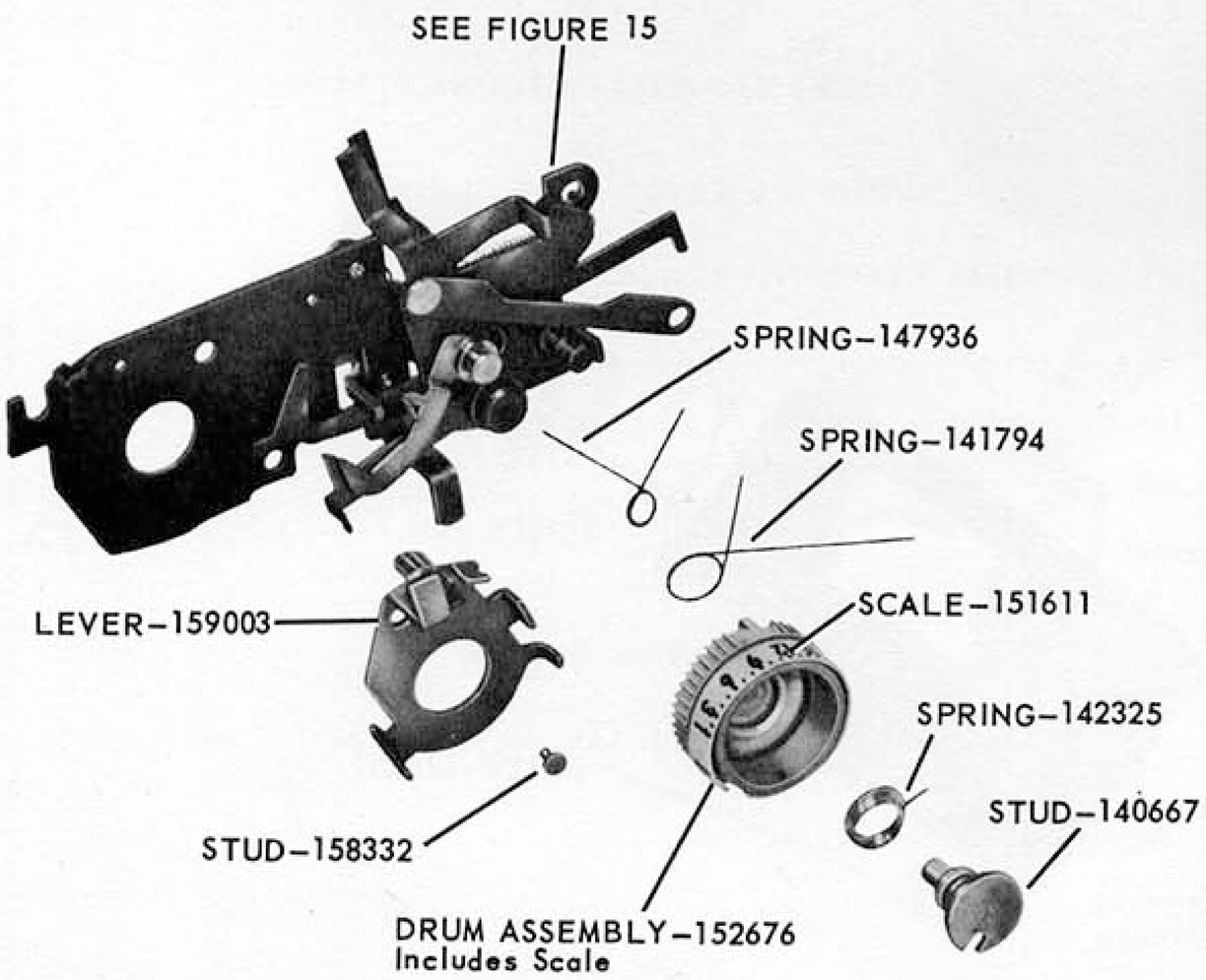

MECHANISM PLATE ASSEMBLY–158582

14

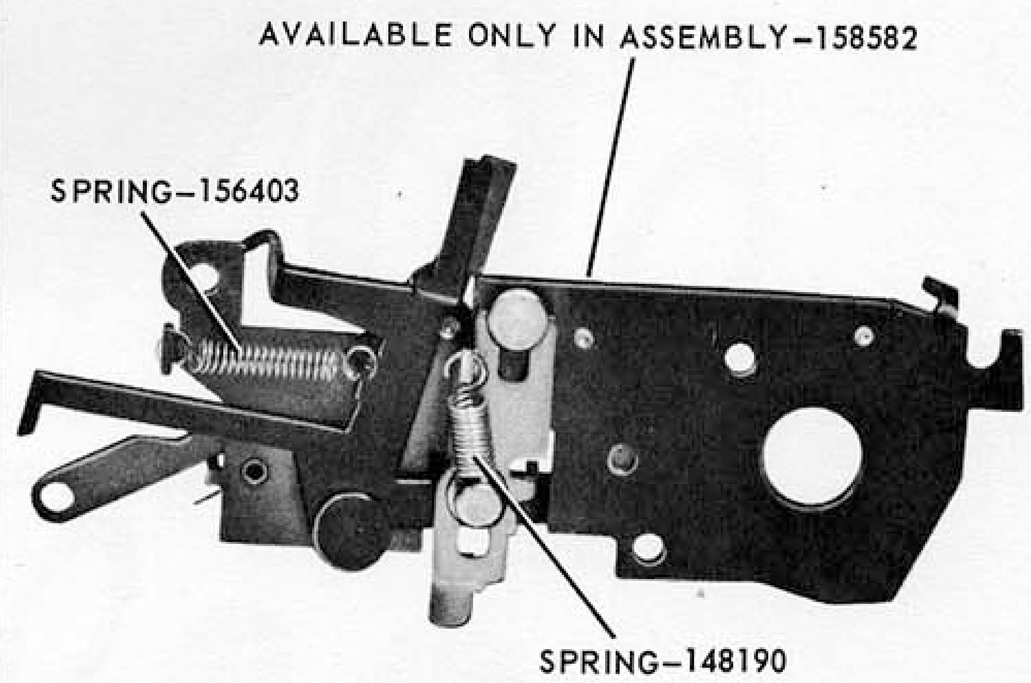

15

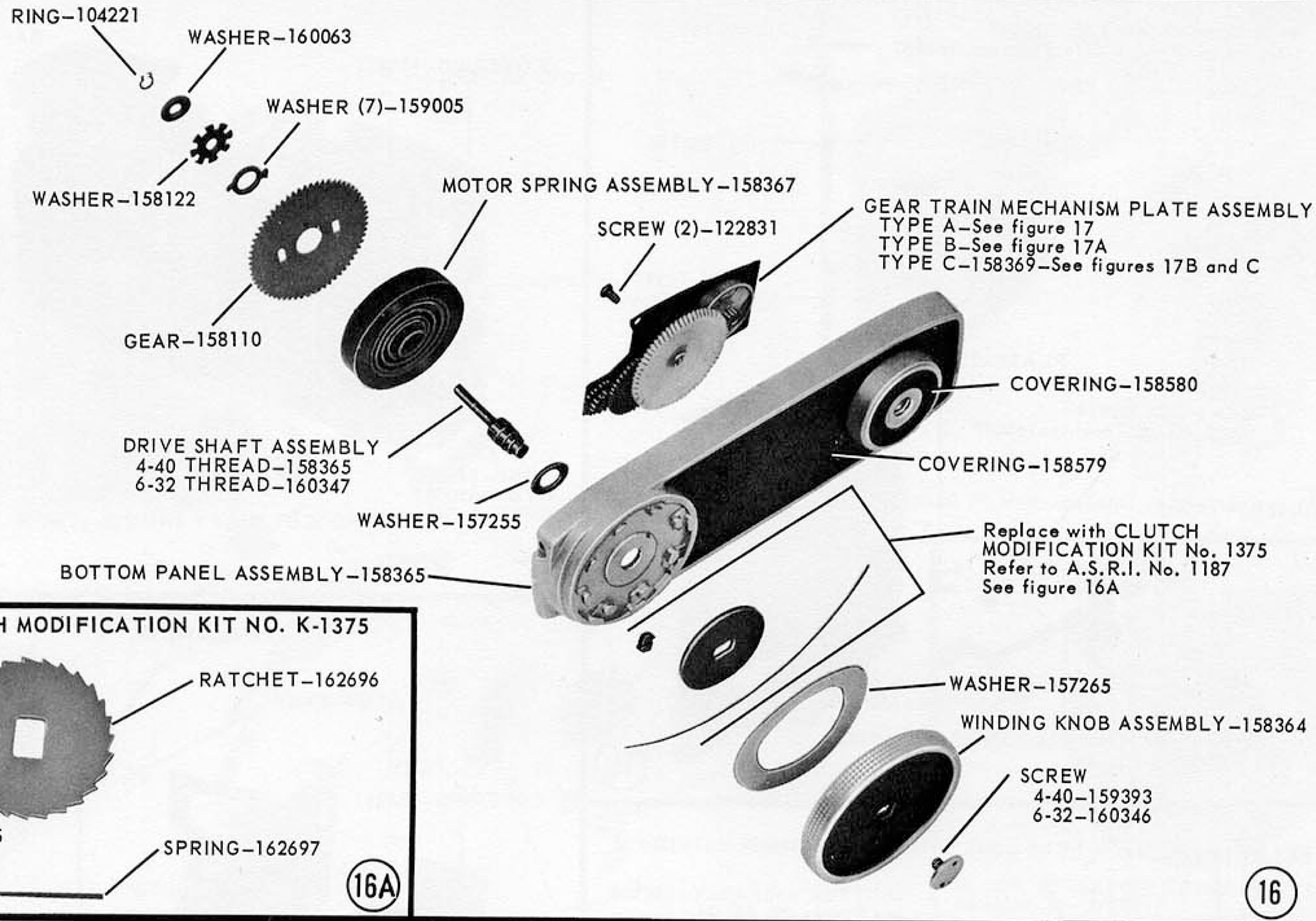

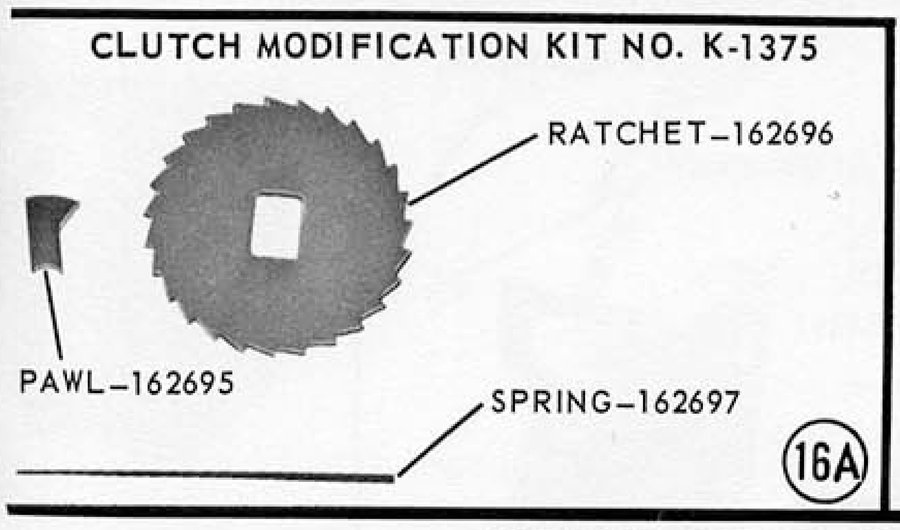

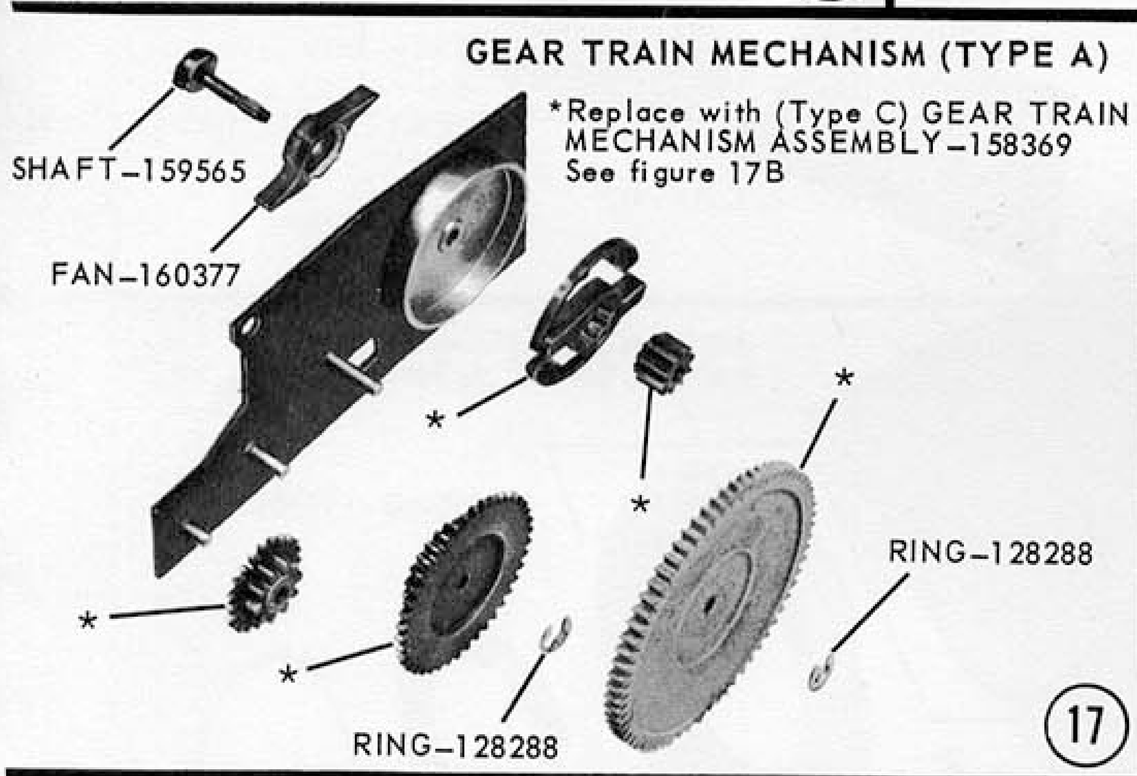

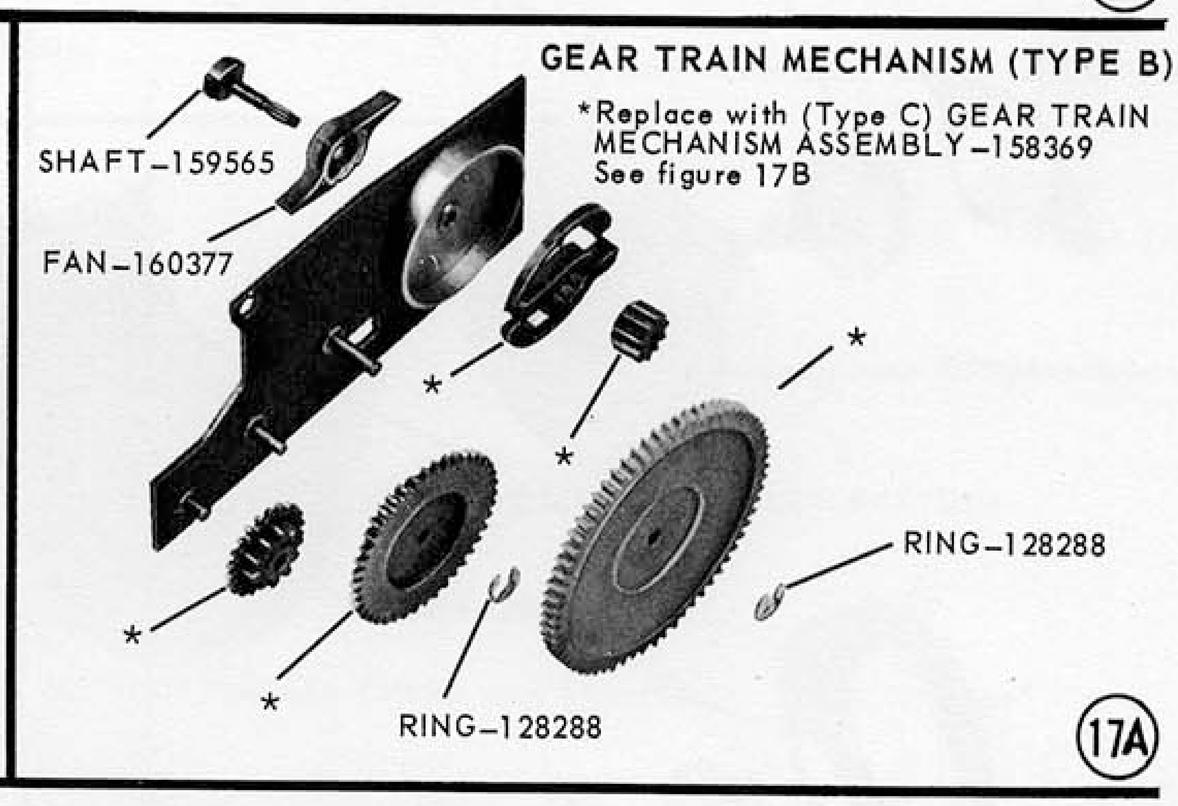

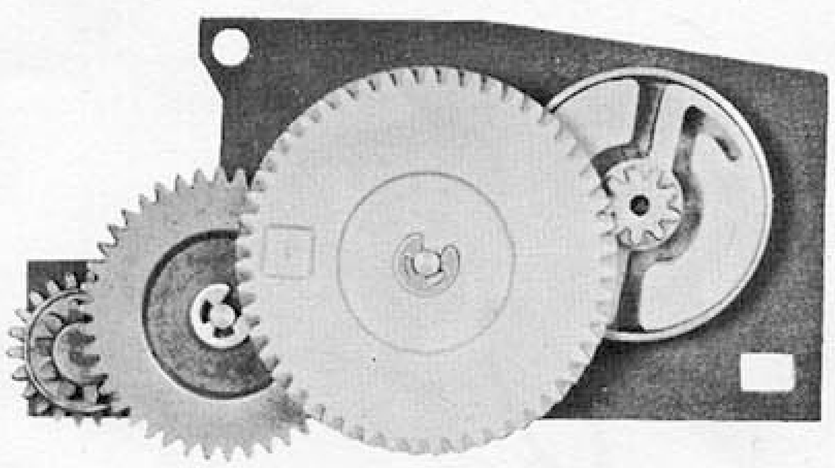

GEAR TRAIN MECHANISM ASSEMBLY
(TYPE C)–158369 See figure 17C

17B

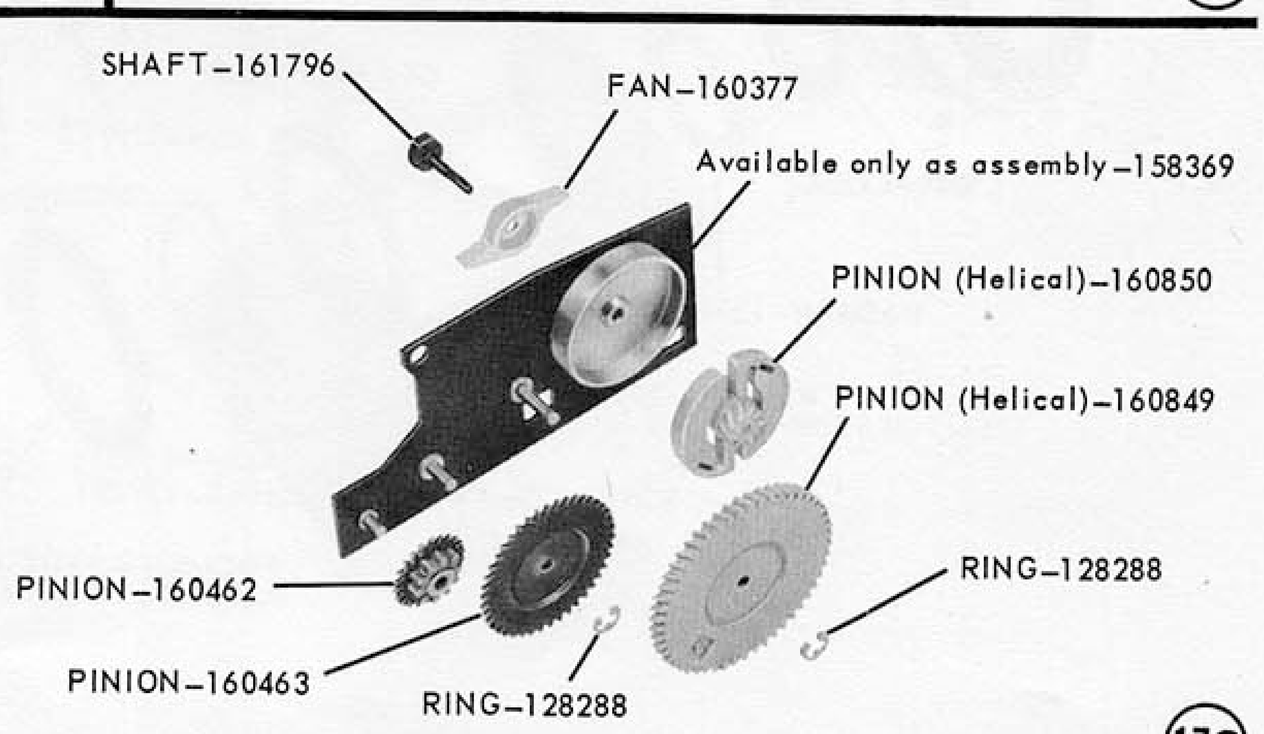

GEAR TRAIN MECHANISM ASSEMBLY (TYPE C)–158369

17C

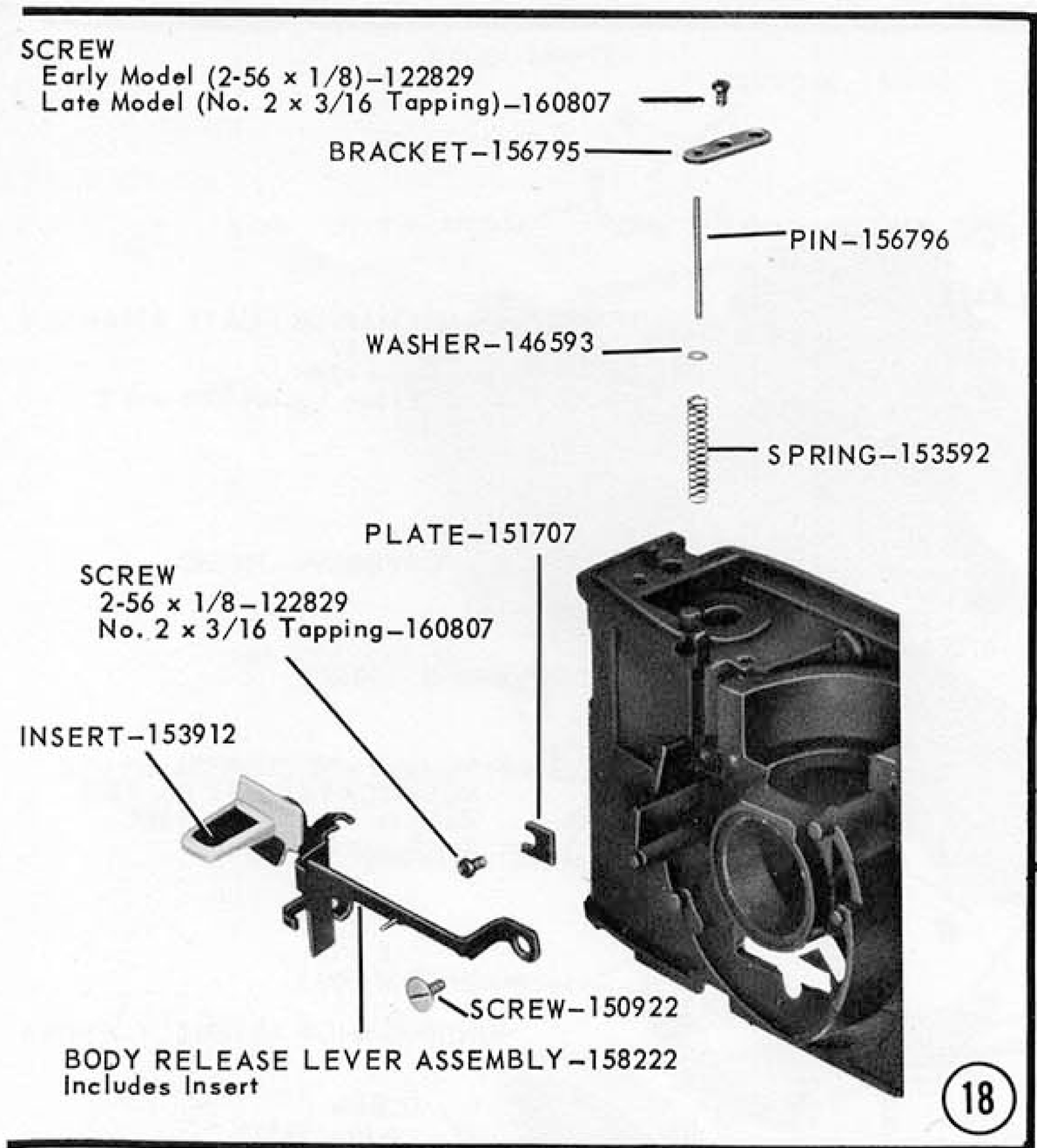
SCREW
Early Model (2-56 x 1/8)–122829
Late Model (No. 2 x 3/16 Tapping)–160807
BRACKET–156795
PIN–156796
WASHER–146593
SPRING–153592
PLATE–151707
SCREW
2-56 x 1/8–122829
No. 2 x 3/16 Tapping–160807
INSERT–153912
SCREW–150922
BODY RELEASE LEVER ASSEMBLY–158222
Includes Insert
18

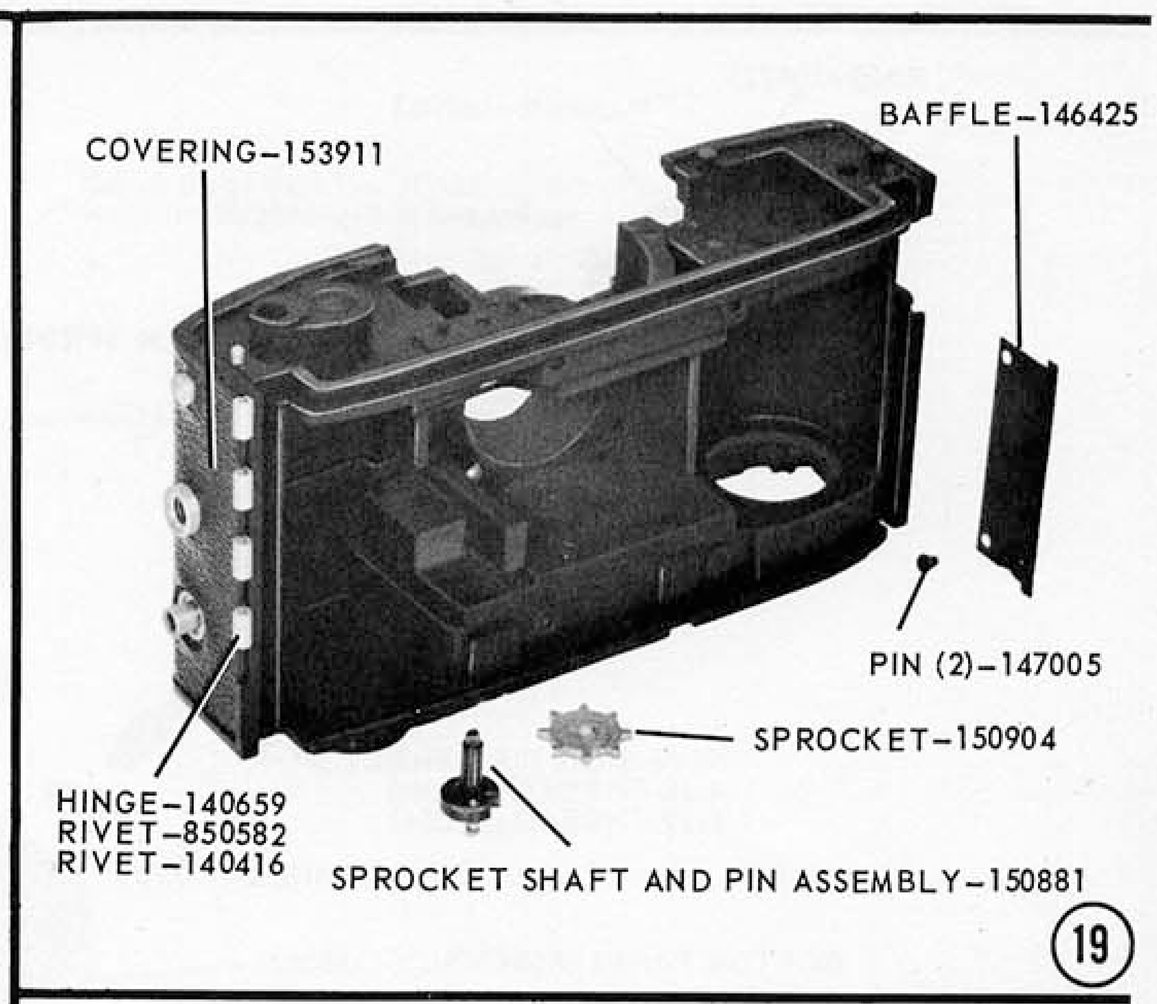
COVERING–153911
BAFFLE–146425
PIN (2)–147005
SPROCKET–150904
HINGE–140659
RIVET–850582
RIVET–140416
SPROCKET SHAFT AND PIN ASSEMBLY–150881
19

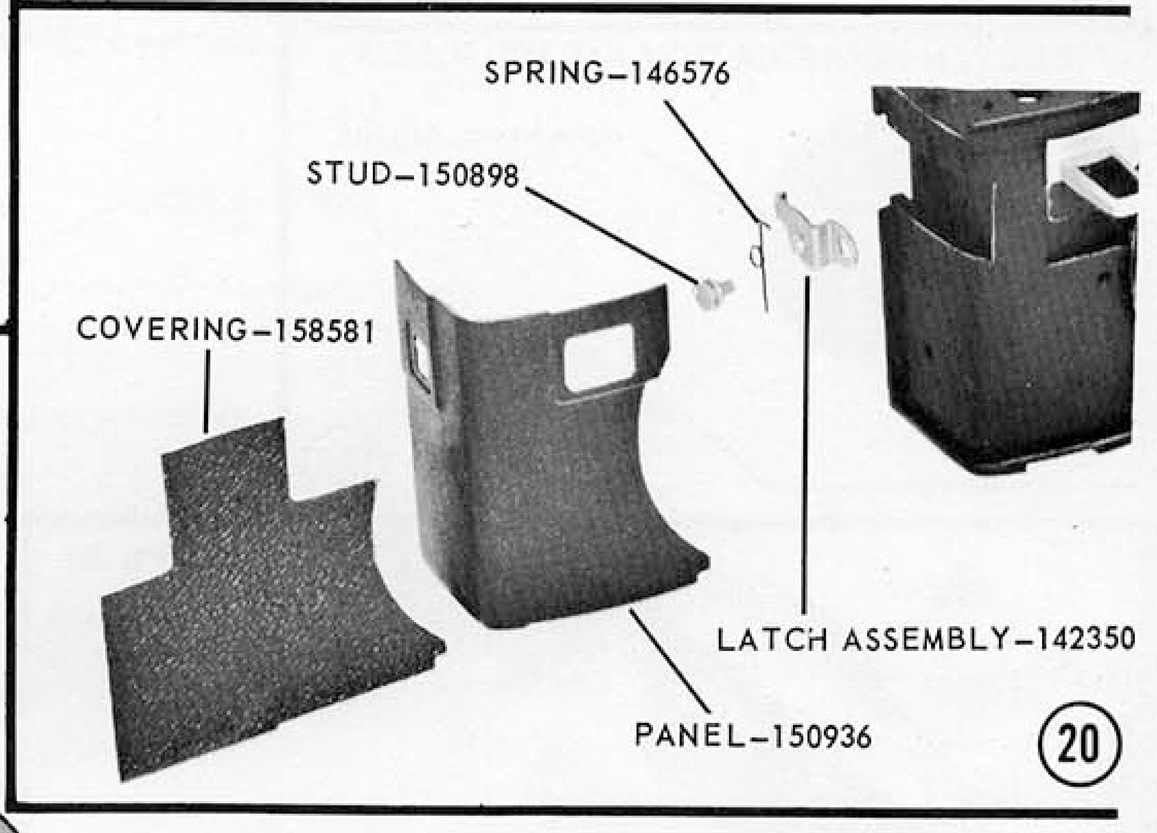
SPRING–146576
STUD–150898
COVERING–158581
LATCH ASSEMBLY–142350
PANEL–150936
20

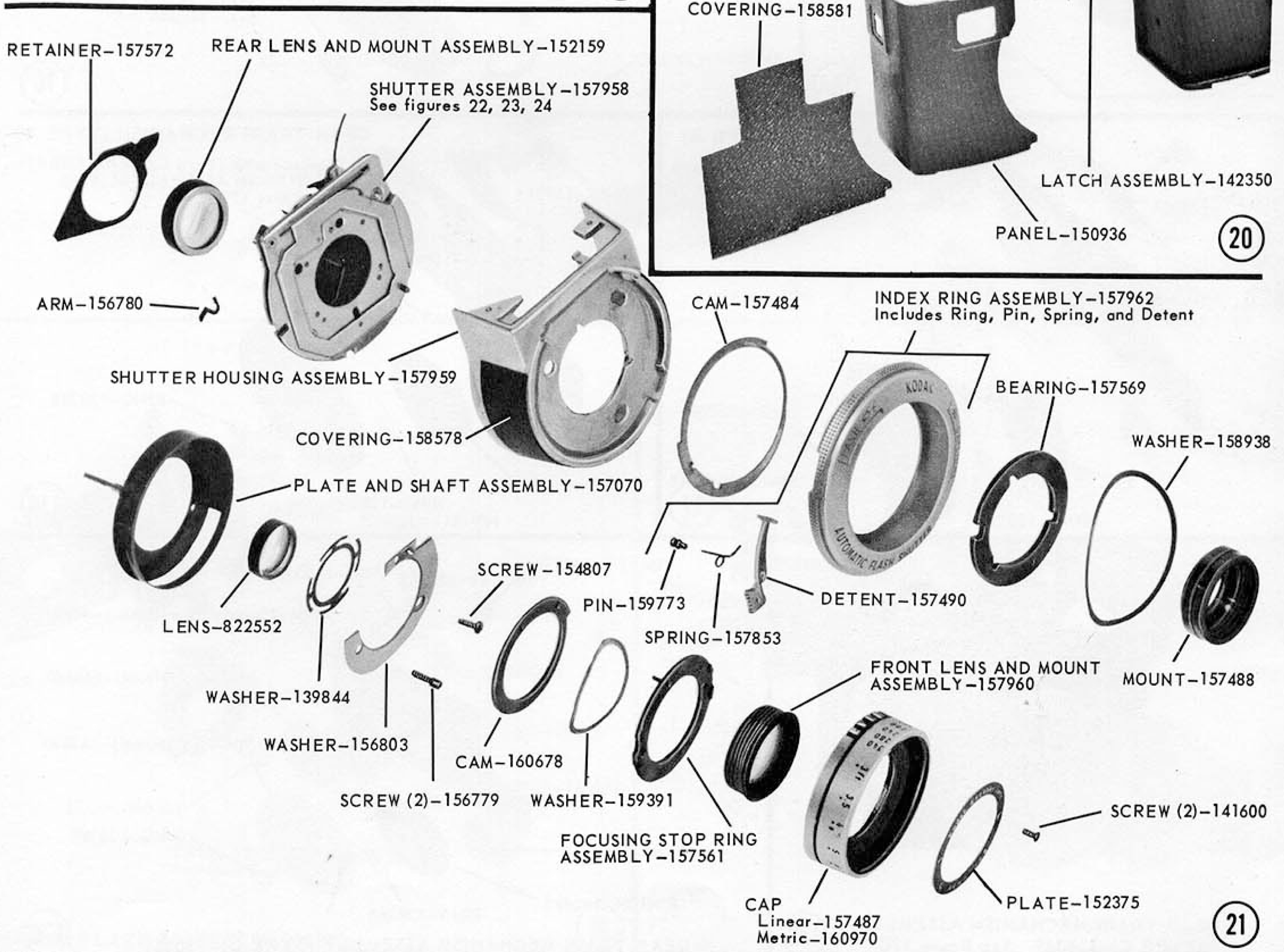
RETAINER–157572
REAR LENS AND MOUNT ASSEMBLY–152159
SHUTTER ASSEMBLY–157958
See figures 22, 23, 24
ARM–156780
SHUTTER HOUSING ASSEMBLY–157959
COVERING–158578
PLATE AND SHAFT ASSEMBLY–157070
CAM–157484
INDEX RING ASSEMBLY–157962
Includes Ring, Pin, Spring, and Detent
BEARING–157569
WASHER–158938
LENS–822552
SCREW–154807
PIN–159773
SPRING–157853
DETENT–157490
WASHER–139844
WASHER–156803
CAM–160678
SCREW (2)–156779
WASHER–159391
FRONT LENS AND MOUNT
ASSEMBLY–157960
MOUNT–157488
FOCUSING STOP RING
ASSEMBLY–157561
SCREW (2)–141600
CAP
Linear–157487
Metric–160970
PLATE–152375
21

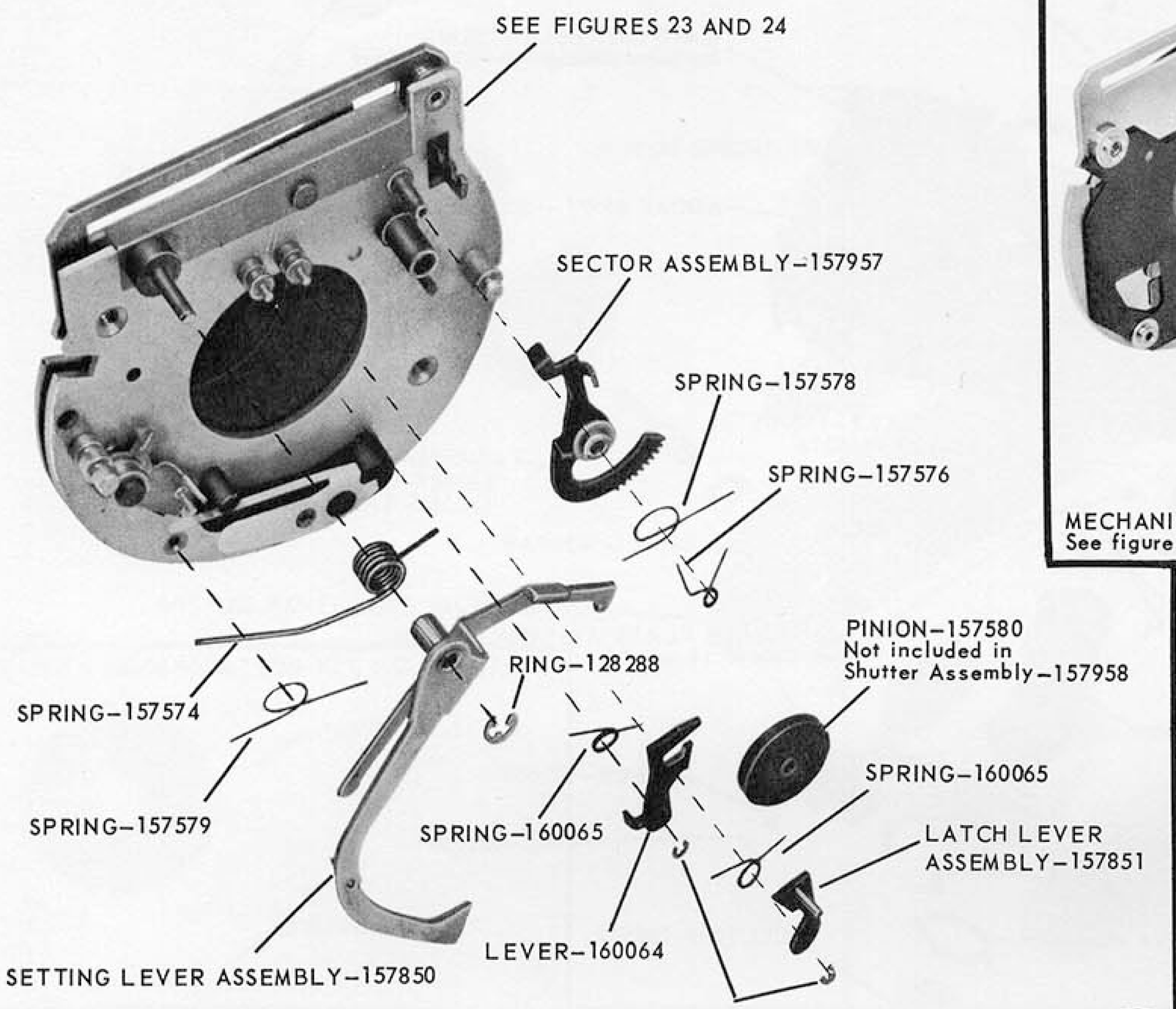

SHUTTER ASSEMBLY–157958
Does not include Pinion–157580

22

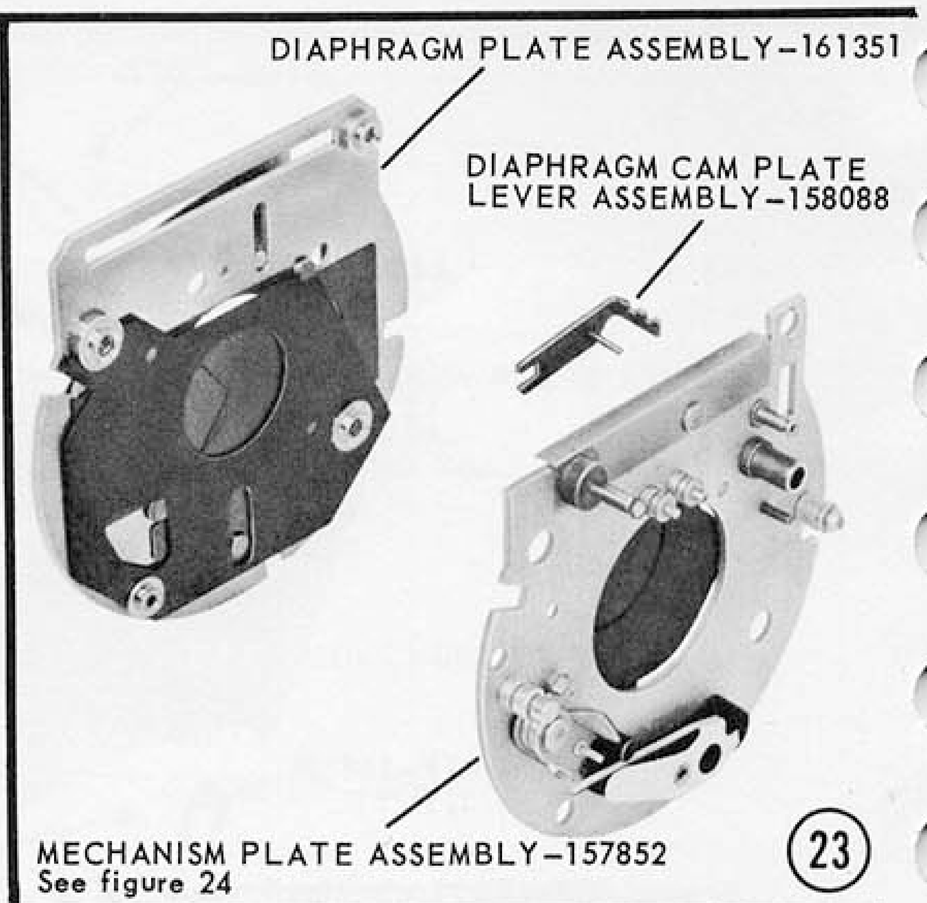

23

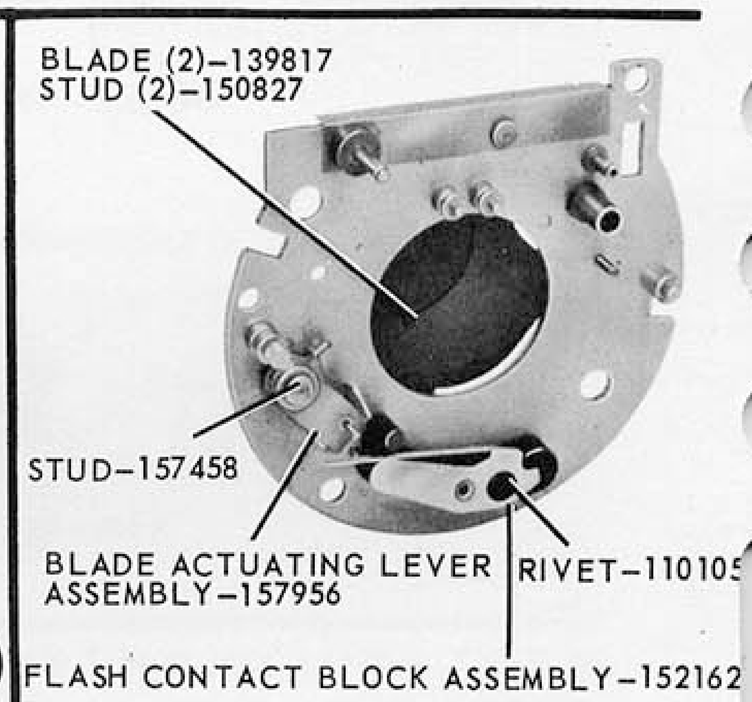

MECHANISM PLATE ASSEMBLY–157852

24

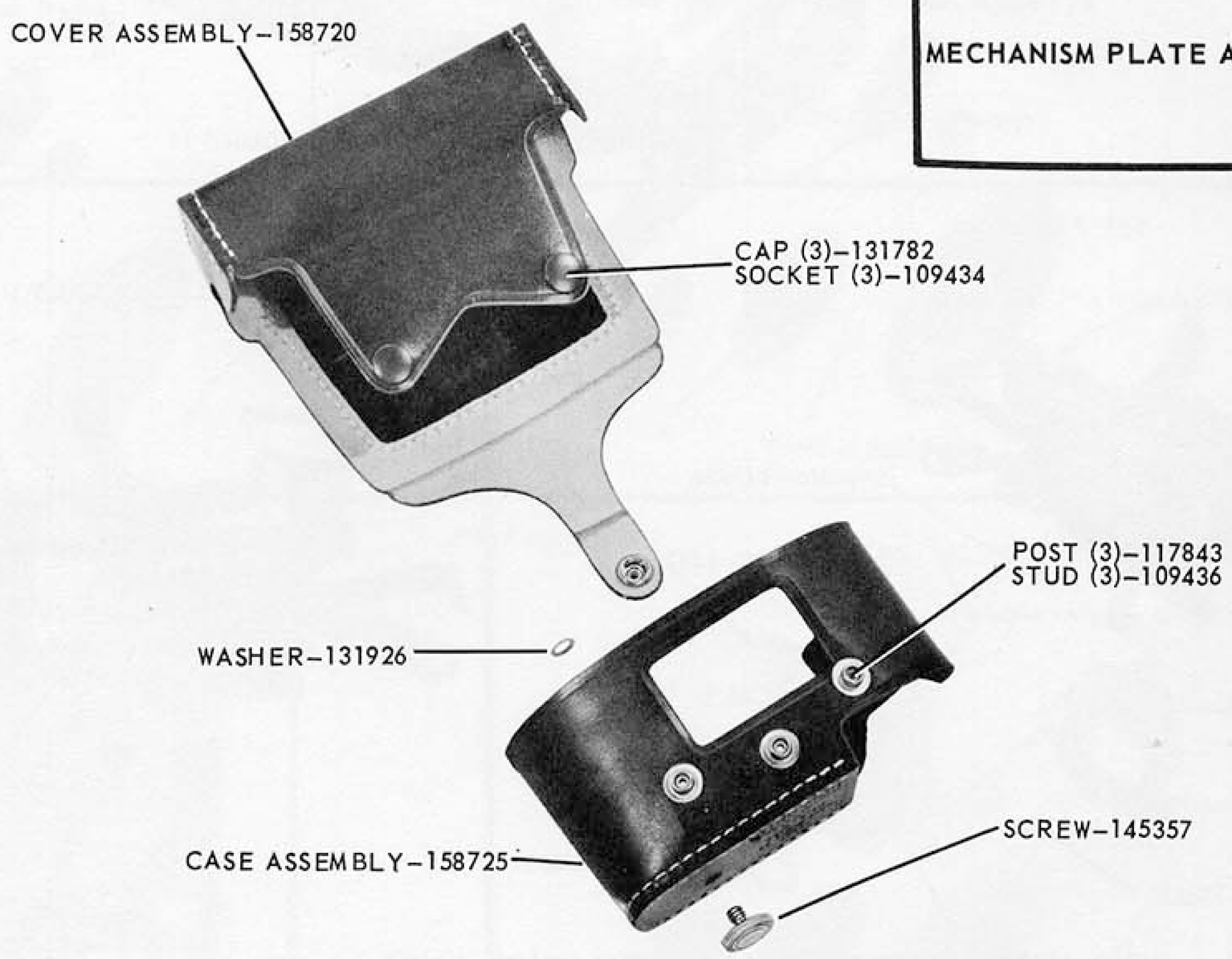

FIELD CASE

25

Always give PART NUMBER and NAME when ordering parts

PART NO.	PART NAME	FIG.
K-1375	Clutch Modification Kit	16A
79023	Lockwasher - Int tooth, No. 2	9
104221	Ring - Retaining, Ext, Beryllium Copper, Truarc No. 5100-12 or equiv.	16
110105	Rivet - Flash contact block	24
110509	Rivet - Pressure pad	1
120012	Buckle - Shoulder strap.	1
120015	Strap Assembly	1
122829	Screw - Mach, min hd, 2-56 x 1/8	18
122830	Screw - Mach, min hd, 2-56 x 3/16	1
122831	Screw - Mach, flat hd, 2-56 x 3/16	13
123105	Screw - Mach, pan hd, 2-56 x 3/16	10
128288	Ring - Retaining, Ext, Truarc No. 5133-6 or equiv	17
128587	Screw - Mach, flat hd, 2-56 x 1/4	13
129757	Ring - Retaining, Ext, Truarc No. 5133-9 or equiv	13
130291	Screw - Mach, min hd, 4-40 x 1/2	3
131152	Washer - Film speed knob	7
137216	Rivet - Hinge.	1
139817	Blade - Shutter	24
139844	Washer - Negative lens retaining	21
140416	Rivet - Hinge.	19
140659	Hinge - Case	19
140660	Hinge - Back	1
140661	Pin - Hinge	1
140667	Stud - Counter	14
141390	Ring - Filter retaining	1
141600	Screw - Mach, min hd, 0-80 x 1/8	21
141794	Spring - Check pawl	14
142084	Spring - Negative lens retainer.	6
142096	Retainer - Beam splitter	5
142097	Retainer - Mirror	5
142325	Spring - Counter drum	14
142350	Latch Assembly	20
143439	Retainer - Eye lens	7
145189	Rivet - Card plate	2
145960	Ring - Retaining, Ext, Truarc No. 5133-4 or equiv	22
146425	Baffle - Light	19
146576	Spring - Latch	20
146593	Washer - Body release spring	18
147003	Screw - Mirror bracket pivot	4
147004	Screw - Mirror bracket adjusting	4
147005	Pin - Baffle.	19
147936	Spring - Counter pawl	14
148190	Spring - Mechanism release slide	15
149735	Washer - Dial release button	8
150827	Stud - Blade pivot.	24
150871	Pressure Pad Assembly	1
150873	Rewind Knob Assembly	3
150874	Hanger Plate Assembly	10
150877	Cover Assembly.	7
150878	Finder Bracket Assembly	4
150881	Sprocket Shaft and Pin Assembly.	19
150893	Spring - Viewfinder window	4
150894	Window - Viewfinder.	4
150896	Shaft - Rewind	10
150898	Stud - Latch	20
150901	Bracket - Contact.	13
150904	Sprocket	19
150910	Frame - Back	1
150919	Bearing - Dial release button	8
150921	Button - Dial release	8
150922	Screw - Body release lever	18
150923	Lens - Photocell	6
150924	Window - Reticle	6

PART NO.	PART NAME	FIG.
150926	Spring - Reticle window.	6
150936	Panel - Front	20
150939	Screw - Photocell bracket	10
150942	Screw - Shutter mounting, long	9
150952	Lever - Interlock	13
151604	Screw - Mach, min hd, 4-40 x 5/8	3
151606	Spring - Rewind shaft	10
151607	Spring - Dial release lever	11
151608	Screw - Meter	10
151609	Spring - Interlock lever.	13
151610	Bezel - Viewfinder eye lens	8
151611	Scale - Counter	14
151707	Plate - Guide pin	18
151901	Insert - Rewind knob.	3
152159	Rear Lens and Mount Assembly	21
152162	Flash Contact Block Assembly	24
152175	Spring - Indicator lever.	11
152176	Spring - Photocell lens	6
152177	Spacer - Photocell lens	6
152375	Plate - Lens mount name.	21
152395	Gasket - Rear lens mount	9
152432	Screw - Tap., Type B, flat hd, No. 2 x 3/16.	7
152676	Drum Assembly	14
153181	Lens - Negative finder	6
153592	Spring - Body release lever	18
153911	Covering - Case, left	19
153912	Insert - Body release	18
154807	Screw - Front mount clamping	21
155216	Rivet - Contact bracket	13
156403	Spring - Metering control lever	15
156779	Screw - Front mount clamping stop	21
156780	Arm - Range indicator grip	21
156790	Bushing - Focus indicator lever	12
156791	Lever - Focus indicator	12
156795	Bracket - Guide pin	18
156796	Pin - Body release guide	18
156803	Washer - Focus cap tension	21
157070	Plate and Shaft Assembly.	21
157255	Washer - Drive shaft	16
157265	Washer - Winding knob	16
157458	Stud - Blade actuating lever	24
157469	Plate - Shutter speed	4
157475	Detent - Speed cam.	10
157479	Drum - Photocell masking	7
157482	Screw - Meter index plate, short.	9
157484	Cam - Flash computer	21
157487	Cap - Focus, linear	21
157488	Mount - Negative lens	21
157490	Detent - Flash computer	21
157500	Exposure Meter Assembly	21
157561	Focusing Stop Ring Assembly	21
157566	Panel - Viewfinder housing cover	7
157567	Insert - Shutter speed knob	4
157569	Bearing - Flash computer cam	21
157570	Housing - Viewfinder	7
157572	Retainer - Rear lens assembly	21
157574	Spring - Main drive	22
157576	Spring - Diaphragm lever	22
157578	Spring - Sector	22
157579	Spring - Blade closing.	22
157580	Pinion - Retard	22
157849	Speed Levers and Baffle Assembly	10
157850	Setting Lever Assembly.	22
157851	Latch Lever Assembly	22
157852	Mechanism Plate Assembly	23
157853	Spring - Detent	21
157953	Housing Complete.	3

PART NO.	PART NAME	FIG.
157956	Blade Actuating Lever Assembly	24
157957	Sector Assembly	22
157958	Shutter Assembly	21
157959	Shutter Housing Assembly	21
157960	Front Lens and Mount Assembly	21
157962	Index Ring Assembly	21
157963	Plate and Window Assembly	9
157965	Speed Knob and Plate Assembly	7
157967	Speed Cam Assembly	4
158021	Card - B and W Film	2
158088	Diaphragm Cam Plate Lever Assembly	23
158110	Gear	16
158122	Washer - Key	16
158124	Ring - Release	13
158125	Spring - Drive clutch	13
158127	Spring - Rewind	13
158138	Plate - End	13
158158	Reticle - Viewfinder	6
158159	Screw - Focus indicator	12
158219	Washer - Shutter speed plate	4
158220	Screw - Bottom panel	13
158222	Body Release Lever Assembly	18
158223	Screw - Bottom panel	13
158332	Stud - Release lever	14
158364	Winding Knob Assembly	16
158365	Bottom Panel Assembly	16
158367	Motor Spring Assembly	16
158369	Type C Gear Train Mechanism Plate Assembly	16
158578	Covering - Shutter housing	21
158579	Covering - Bottom panel	16
158580	Covering - Tripod socket	16
158581	Covering - Case, right	20
158582	Mechanism Plate Assembly	13
158583	Case Assembly	13
158824	Back Complete	1
158867	Plate - Card holder	2
158937	Spring - Speed lever	10
158938	Washer - Spring tension	21
158945	Clutch - Drive	13
158947	Drive Shaft Assembly (4-40)	16
159003	Lever - Rewind	14
159005	Washer - Slip	16
159144	Spool - Take up	13
159391	Washer - Tension	21
159393	Screw - Winding knob (4-40)	16
159565	Shaft	17
159752	Screw - Mechanism plate stop	13

PART NO.	PART NAME	FIG.
159771	Washer - Take up drum, tension	13
159772	Stud - Interlock lever	13
159773	Pin - Flash detent	21
160063	Washer - Spring	16
160064	Lever	22
160065	Spring	22
160067	Spring - Focus indicator lever	12
160346	Screw - Winding knob (6-32)	16
160347	Drive Shaft Assembly (6-32)	16
160348	Spot - Kodak	13
160362	Screw - Shutter speed knob	4
160377	Fan	17
160397	Screw - Shutter mounting, short	9
160441	Speed Setting Slide Assembly	9
160462	Pinion	17C
160463	Pinion	17C
160678	Cam - Range indicator	21
160807	Screw - Tap., Type BF, min hd, No. 2 x 3/16	1
160849	Pinion (Helical)	17C
160850	Pinion (Helical)	17C
160967	Card - Color Film	2
160970	Cap - Focus, metric	21
161351	Diaphragm Plate Assembly	23
161796	Shaft	17C
162695	Pawl	16A
162696	Ratchet	16A
162697	Spring	16A
822552	Lens - Negative	21
822555	Beam Splitter	5
822556	Mirror	5
833449	Lens - Ocular	7
850582	Rivet - Hinge	19

FIELD CASE

PART NO.	PART NAME	FIG.
109434	Socket - Cover	25
109436	Stud - Case	25
117843	Post - Case	25
131782	Cap - Cover	25
131926	Washer - Camera retaining screw	25
145357	Screw - Camera Retaining	25
158720	Cover Assembly	25
158725	Case Assembly	25

EASTMAN KODAK COMPANY • ROCHESTER 4, NEW YORK

75-4-62-SH-B

Printed in the United States of America

Corrected to SEPTEMBER 1962 | Parts List Supplement No. 5539-2

KODAK MOTORMATIC 35 CAMERA

The following correction should be made in Parts List No. 5539-1.

Page 6, Figure 16

Drive Shaft Assembly -- 4-40 Thread -- 158365. . . . .Change part number to 158947

EASTMAN KODAK COMPANY • ROCHESTER 4, NEW YORK

374-10-62-IPS-800

Printed in the United States of America