MAY 1961 NO. 1150

Servicing the

Kodak Motormatic 35 Camera

EASTMAN KODAK COMPANY

Apparatus Service Department

ROCHESTER 4, N.Y.

TABLE OF CONTENTS

	Page
I. FILM TRANSPORT MECHANISM	
SPECIFICATIONS	
DISASSEMBLY WITH REASSEMBLY NOTES	
13. Clutch Assembly - Wind Knob	5
14. Gear Train - Motor Assembly	5
15. Motor Assembly - Spring Drive	6
16. Metering Mechanism	7
IV. HOUSING	
SPECIFICATIONS	
DISASSEMBLY WITH REASSEMBLY NOTES	
29. Top Housing	9
30. Speed and ASA Scale	10
31. Finder	11
32. Range Indicator Mask	11
33. Manual Exposure Control	11
V. SHUTTER	
SPECIFICATIONS	
DISASSEMBLY WITH REASSEMBLY NOTES	
43. Front Lens	13
44. Focusing Instructions	13
45. Shutter Housing Assembly	14
46. Shutter Mechanism	15
VI. EXPOSURE CONTROL	
SPECIFICATIONS	
DISASSEMBLY WITH REASSEMBLY NOTES	
55. Meter	19
56. Diaphragm Opening Adjustments	19
57. Manual Exposure Control (Instruction 33)	19

Service instructions for this camera are separated on a functional basis as listed in REPAIR SCHEDULE, EASTMAN KODAK COMPANY - Apparatus Service Department, Rochester 4, New York. Repair classifications II and III are not included since they do not apply to this camera.

I. FILM TRANSPORT MECHANISM

SPECIFICATIONS

1. Rewind Assembly (w/o film in camera) should:
   a) Rotate freely in both directions.
   b) Have detent action when flush with top housing.
   c) Allow extension post to be withdrawn approximately 3/8" without disengaging lower section from its detent position.

2. After properly loading film in camera, further turning of wind-up knob should function as follows:
   a) First two turns (approximately) should set shutter, advance film counter to #1 and wind-off leader strip. (Motor "whirring" noise will be evident during this operation only).
   b) Next 5 ½ turns (approximately) should wind motor fully and bring knob to a stop without any tendency to back-wind when hand pressure is released.

3. Depressing body release should trip shutter and actuate automatic film advance mechanism through one cycle, as follows:
   a) Advance film one frame and counter to next number (#2).
   b) Set shutter.

4. Additional actuations of the body release must produce a total of at least 7 complete cycles (until film counter reads at least #8) without rewinding the motor.

5. Body release should operate smoothly.

6. Maximum counter dial error with respect to index mark should not exceed ± 1/3 of a division.

7. Rewind release lever should, when held in direction of arrow:
   a) Release spring tension of motor.
   b) Disconnect take-up spool from drive mechanism.
   c) Have spring tension sufficient to return it to end of recess when released.

8. Action of rewinding film through camera should be reasonably smooth.

   NOTE: Rewinding film will also advance counter dial to Figure 36; at this point the counter advance mechanism will skip.

9. Closing and latching back should depress the mechanism release sufficiently to allow counter check pawl to advance counter dial when film is advanced through camera. However, the mechanism slide release should not be depressed to a point where it can block the action of metering lever and prevent further film advance.

10. Opening camera back should allow the mechanism slide release to retract the counter check pawl and counter pawl from the counter dial drum and allow it to return to "E" position by spring action.

11. Pressure pad and film plate should not scratch film detrimentally in picture area.

12. Sequence of action

The following schematic of motor drive, metering mechanism and shutter setting mechanism may be helpful in servicing this camera.

To space pictures on the film accurately, the system utilizes the High Speed Governor (fan) as a stopping device. The Film Metering Sprocket makes one rotation per frame. At the end of each rotation, the Shutter Setting Lever sets the shutter, the Metering Control Lever drops into a notched cam driven by the sprocket causing another arm of the lever to block the rotation of the High Speed Governor. This stops the motor.

To start another film advance, the body release trips the shutter. When the shutter blades are fully closed, the Shutter Operating Lever removes the Metering Control Lever from the notch and at the same time from the path of the High Speed Governor. The spring motor is now free to advance the film, set the shutter and advance the exposure counter.

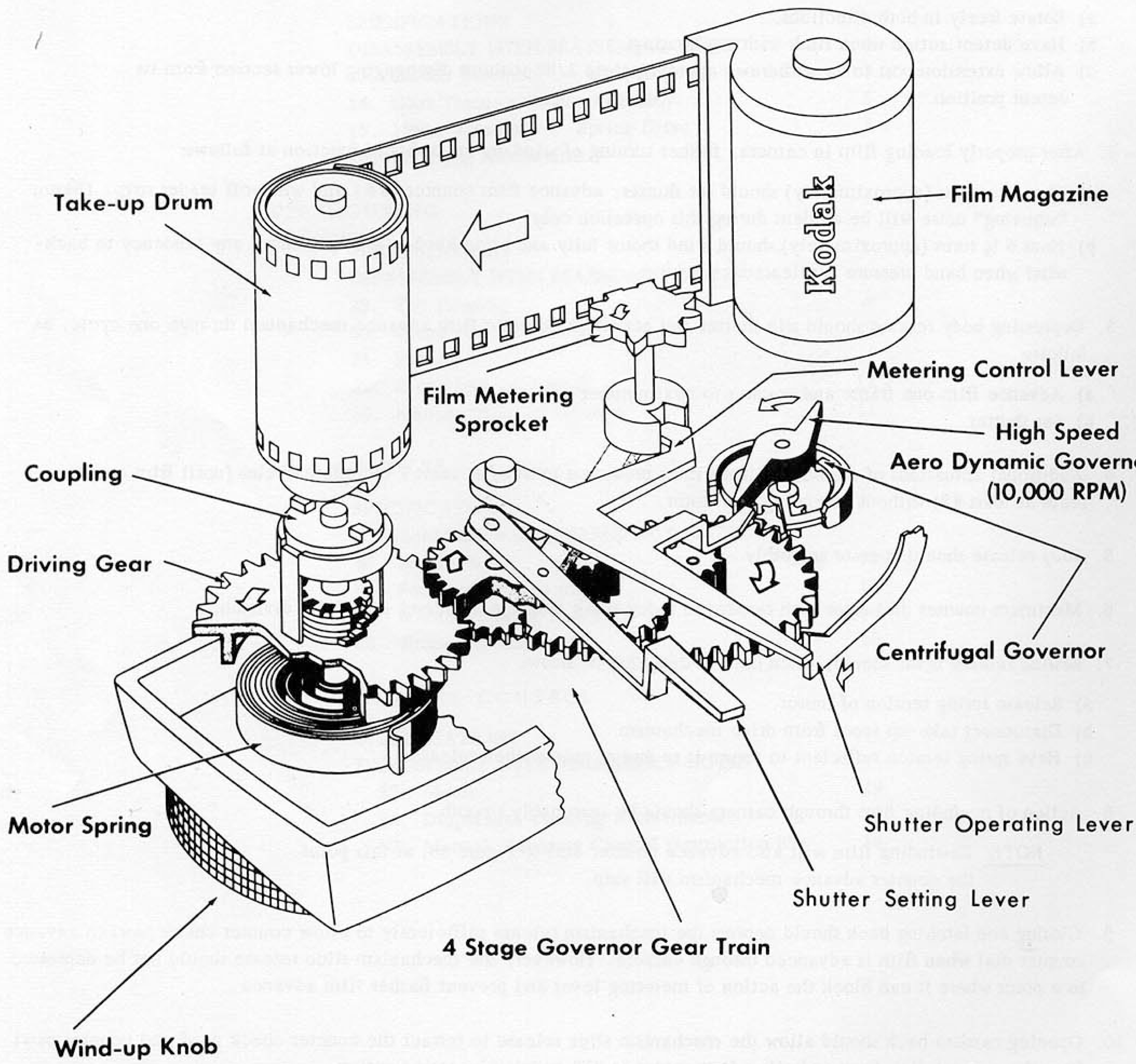

DISASSEMBLY WITH REASSEMBLY NOTES

13. Clutch Assembly - Wind Knob

13.1 Disassembly

CAUTION: Release motor tension with rewind release lever before disassembly. If unable to release tension in normal manner, remove Wind Knob (Tool #897) and tumbler spring, then rotate each tumbler counter-clockwise.

Use Tool #897 and #30 Screwdriver to remove wind knob retainer screw. The balance of parts: knob, spacer spring, tumblers and clutch ring can now be removed.

13.2 Reassembly

a) Clutch ring should be installed with recessed side toward casting.
b) Tumblers are reversible (end for end).
c) No lubrication on components.
d) Straighten spring to increase tension on tumblers (to prevent back-wind)
e) Refer to Instruction 15.2 for initial wind-up of motor spring.

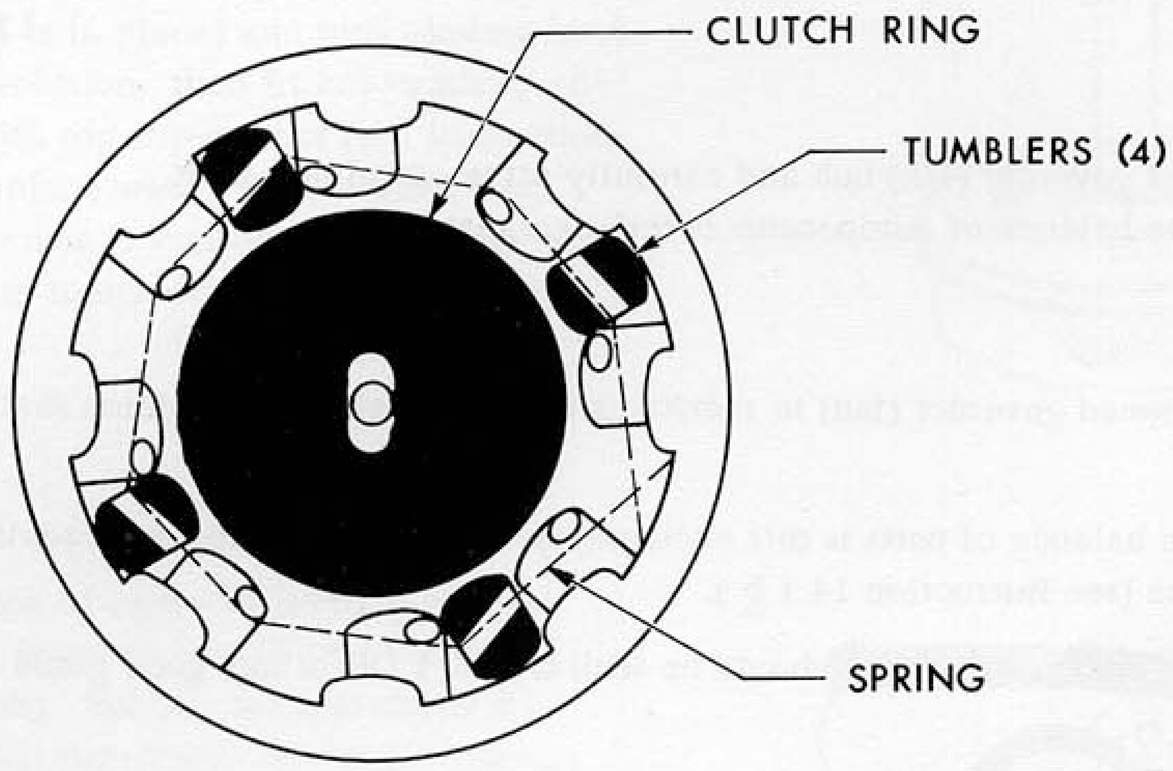

14. Gear Train - Motor Assembly

14.1 Disassembly

CAUTION: Release motor tension with rewind release lever before disassembly. If unable to release tension in normal manner, remove Wind Knob (Tool #897) and tumbler spring, then rotate each tumbler counter-clockwise.

a) Remove motor base assembly from camera (two screws)
b) Remove gear train assembly from motor base assembly (two screws)

NOTE: Two distinct types of gear trains will be found in the motor assembly. Components of the two types are not interchangeable. However, a complete unit of either type can be assembled and installed regardless of the type originally fitted. The two types are identified as follows:

Type A

1. Pinion studs in plate have no shoulders.
2. Pinions #1, #2, and #3 have slight shoulders on plate side.

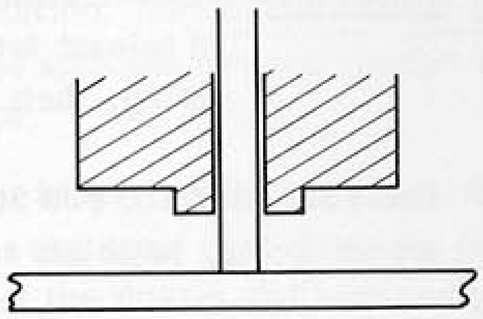

TYPE A

Type B

1. Pinion studs in plate have shoulders.
2 Pinions #1 and #2 have a slight recess on plate side.
3. Pinion #3 has been decreased in over-all thickness.

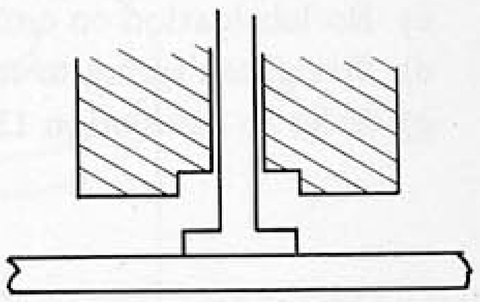

TYPE B

c) Support high speed governor (fan) hub and carefully drive out pinion shaft.
d) Disassembly of the balance of components is self-explanatory.

14.2 Reassembly

a) Reassemble high speed governor (fan) to mechanism plate, making sure pinion shaft has a slight amount of end play.

b) Reassembly of the balance of parts is self explanatory. (Individual component replacement must be made with the same type (see Instruction 14.1 b).

c) Lubrication of the gear train pinions should be with CW7611 Oil or any good grade of light oil applied sparingly.

d) Gear train must be free of binds or rough action.

15. Motor Assembly - Spring Drive

CAUTION: Release motor tension with rewind release lever before disassembly. If unable to release tension in normal manner, remove Wind Knob (Tool #897) and tumbler spring, then rotate each tumbler counter-clockwise.

15.1 Disassembly

Remove motor base assembly (two screws), gear train (two screws), wind knob, clutch assembly, motor assembly, key-washer and slip-washers from motor.

15.2 Reassembly

NOTE: In order to provide sufficient tension and wind-up of the spring motor, it is important that the stacking of the slip-washers and the keying of these to the motor shaft be done as follows:

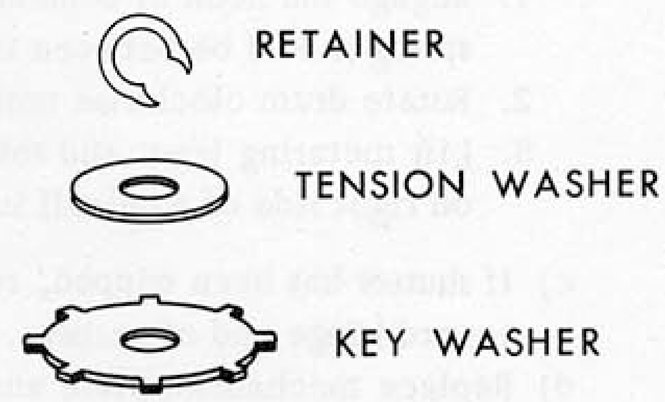

a) Assemble motor, winding clutch and wind knob to bottom casting and place drive gear on motor lugs.

b) Hold slip-washers in place lightly and rotate top washer clockwise until all washers are engaged with each other and no further rotation (without turning motor) is possible.

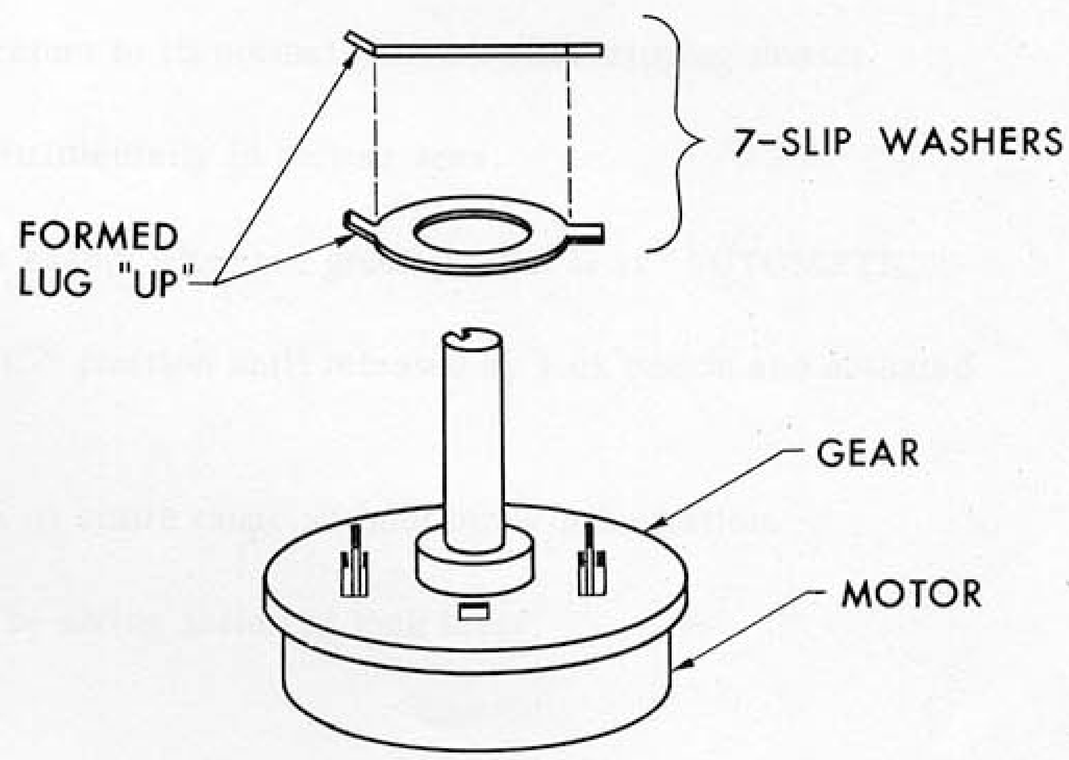

c) An initial 3/4 rotation wind-up of the motor spring must be made before the keying washer is fitted. Hold the drive gear (by holding fan, if gear train is in place) and turn winding knob 3/4 of a revolution, then fit key-washer, engaging it with top slip-washer (see Instruction 15.2 b). Replace washer and retainer ring. Position retainer so that open side is opposite the groove in motor shaft.

d) Check action of motor by holding fan and winding up motor to stop (5 to 6 full rotations of knob). Release fan and check for binds and full run-down. Recheck wind-up, if incorrect disassemble and repeat build-up (see Instruction 15.2 b and c).

e) Position release ring as shown. Add drive clutch, spring (small end toward motor) and replace base assembly.

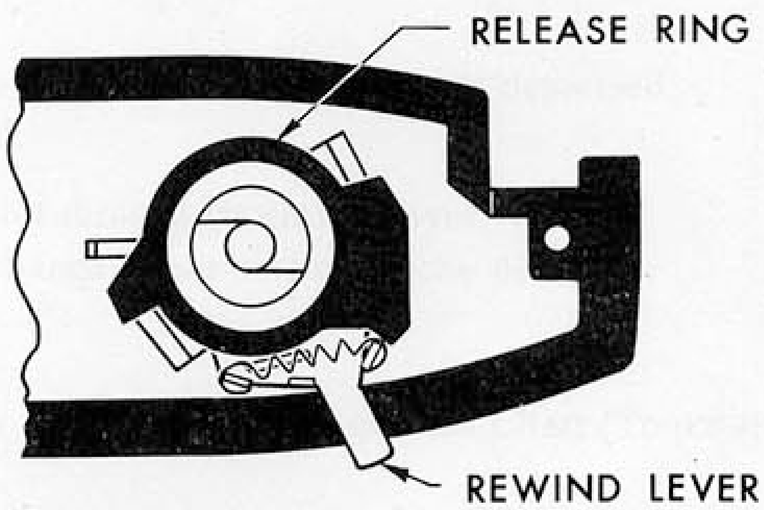

16. Metering Mechanism

NOTE: Because of the similarity of the film metering mechanism of this camera with that of the Automatic 35, repairs will be somewhat identical and these instructions will be brief.

16.1 Disassembly

a) Remove motor assembly. (Refer to Instruction 14.1 a).
b) Set shutter, (rotate sprocket).
c) Remove 3 mechanism plate to case screws and disconnect linkage at sprocket shaft.
d) Lift assembly at rear and remove from case.
e) Remove take-up spool and tension washer.

16.2 Reassembly

a) Replace take-up spool and tension washer (convex side toward take-up spool).
b) If counter drum tension has been lost, reset in following manner:

1. Engage the hook of counter drum return spring in notch of drum retaining stud. (Other end of spring should be between two bosses in drum).
2. Rotate drum clockwise until stop-lug on drum reaches automatic wind-off lug of metering lever.
3. Lift metering lever and rotate drum clockwise one complete revolution until stop-lug of drum is on right side of wind-off lug of metering lever.

c) If shutter has been tripped, reset by reaching through opening in case and pushing shutter set lever toward hinge end of camera.
d) Replace mechanism plate and screws.
e) Replace release ring (Figure 15.2 e), clutch, spring, and base assembly.

IV. HOUSING

SPECIFICATIONS

17. Back Assembly should:

    a) Fit case without severe interference.
    b) Latch securely with a minimum of force.
    c) Be free of excessive looseness when latched.
    d) Open partially under film pad pressure when latch is released.

18. Back Latch should:

    a) Hold back securely latched.
    b) Have sufficient spring tension to prevent accidental release during normal use.

19. Body release should have sufficient spring tension to return to its normal position after tripping shutter.

20. Pressure pad and film plate should not scratch film detrimentally in picture area.

21. Signal "MAN" should be visible in finder at all times except when the green pointer is at "AUTOMATIC".

22. Manual pointer should remain locked in "AUTOMATIC" position until released by lock button and actuated by knurled wheel.

23. Knurled wheel should actuate manual pointer through its entire range without binds or hesitation.

24. Lock button should be free of binds and should return by spring action of lock lever.

25. Speed Dial should:

    a) Have detent action at each speed index mark.
    b) Rotate without undue force through its full travel with ASA settings up to 160.

26. ASA Dial should:

    a) Rotate without undue force through its full travel (ASA 10 to 800) when center button is depressed.
    b) Lock securely at each number when center button is released.

    NOTE: If it is impossible to rotate the speed dial or ASA dial through its entire travel, it is because of the interlocking of the two dials. A change in the setting of one dial will permit the other dial to be rotated.

27. Finder alignment should be within the tolerances as defined by Special Finder Alignment Chart (Tool #984).

28. Focus signal "CLOSE", "GROUP", and "SCENE" should appear in finder clearly and in proper relation to setting of focus scale at the three detent positions.

DISASSEMBLY WITH REASSEMBLY NOTES

29. Top Housing

    29.1 Disassembly

    a) Open back, insert suitable tool in rewind post and rotate rewind knob counter-clockwise.
    b) Rotate take-up spool to position, flat side toward latch end, and remove top right retaining screw (short).
    c) Remove top left screw (long) and lift housing assembly.

29.2 Reassembly

a) Rotate shutter speed dial counter-clockwise to stop, set ASA dial to 10.
b) Replace top housing and insert screws.
c) Rotate shutter speed dial clockwise to reposition dial into detent locations for various speeds.

30. Speed and ASA Scale

30.1 Disassembly

a) Remove top housing (Instruction 29.1).
b) Remove covering and plate of ASA lock button.
c) Rotate speed knob assembly counter-clockwise to the stop, depress and rotate ASA lock button counter-clockwise to the stop (ASA 10). Then use Tool #897 or Expansion Tool #798 with #751 Handle and remove lock button, speed scale, tension washer and speed scale cam.

30.2 Reassembly

a) ASA scale of knob assembly should be located as shown: (scale is cemented in place)

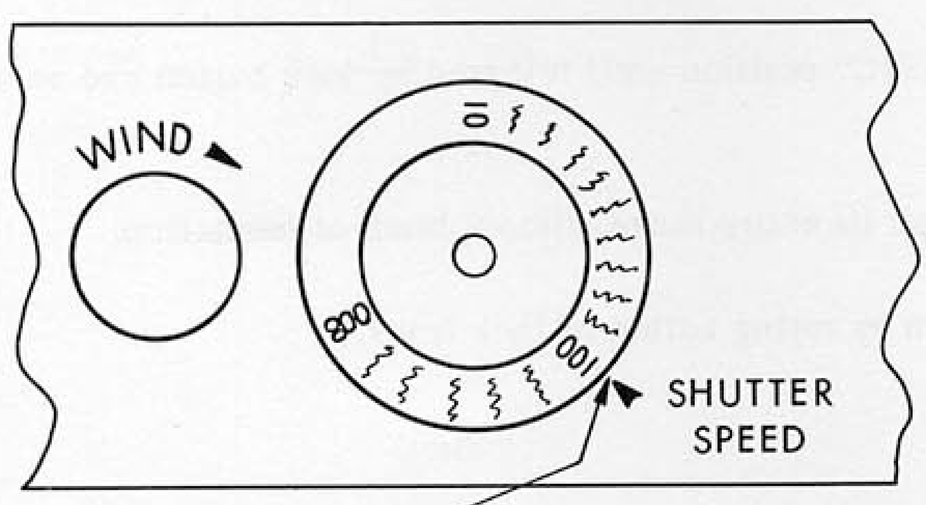

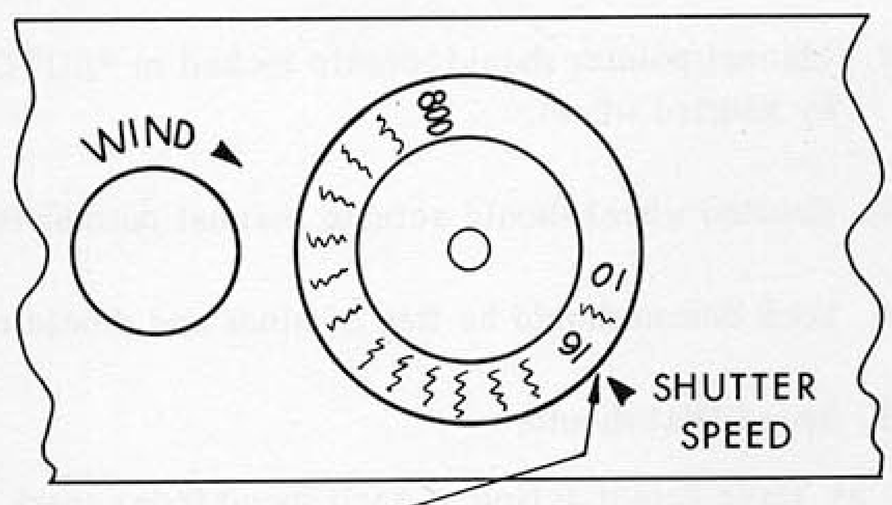

NOTE: If a new knob and scale assembly is fitted to top housing, the scale can be removed, then recemented after the knob has been assembled. This will eliminate a difficult orientation condition since the knob and drum can be staked in any position as long as the drum stop lug is not on the stop boss of the inner plastic housing.

b) Rotate knob and scale assembly clockwise to stop
c) Turn housing over and insert speed scale cam as shown:

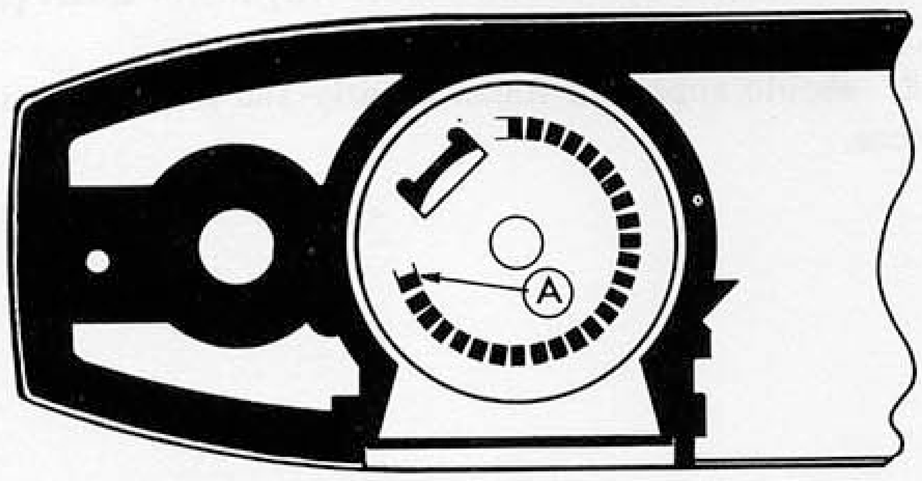

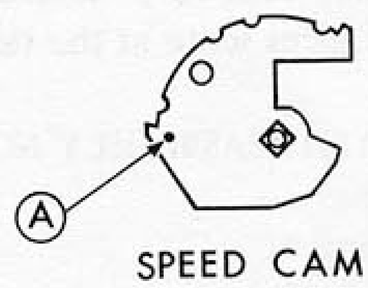

NOTE: Position speed cam so that pin "A" is against the stop and engaged in the hole at "A" of the photocell drum.

d) Hold speed cam in this location and replace tension washer, speed scale and lock button.
e) Check for full travel of ASA opening from 10 to 800 and tighten lock button securely.

31. Finder

The finder assembly is identical with that of the Kodak Automatic 35 and similar to that of the Signet 30 and 50 Cameras. If major parts are replaced, the alignment may be checked using the Chart Tool #984 supplied with the Signet 30 and 50 Service Manual.

32. Range Indicator Mask

Minor correction of misalignment of the mask for "CLOSE", "GROUP" and "SCENES" can be made from top of camera after removing the housing. If no permanent correction can be made in this manner it will be necessary to remove the shutter assembly and correct the linkage at this point. (Instruction 46.6 i).

33. Manual Exposure Control

Form mask to cover "MAN" in finder when control is locked in "AUTOMATIC". Complaints of extreme under-exposure have in a few cases been caused by play or back lash in the manual control. It is generally caused by rotation of the knurled set wheel toward the hinge end and then pushing the control release button. This allows the spring tension on the "MAN" flag lever to kick the manual needle back far enough to block the diaphragm slide as shown:

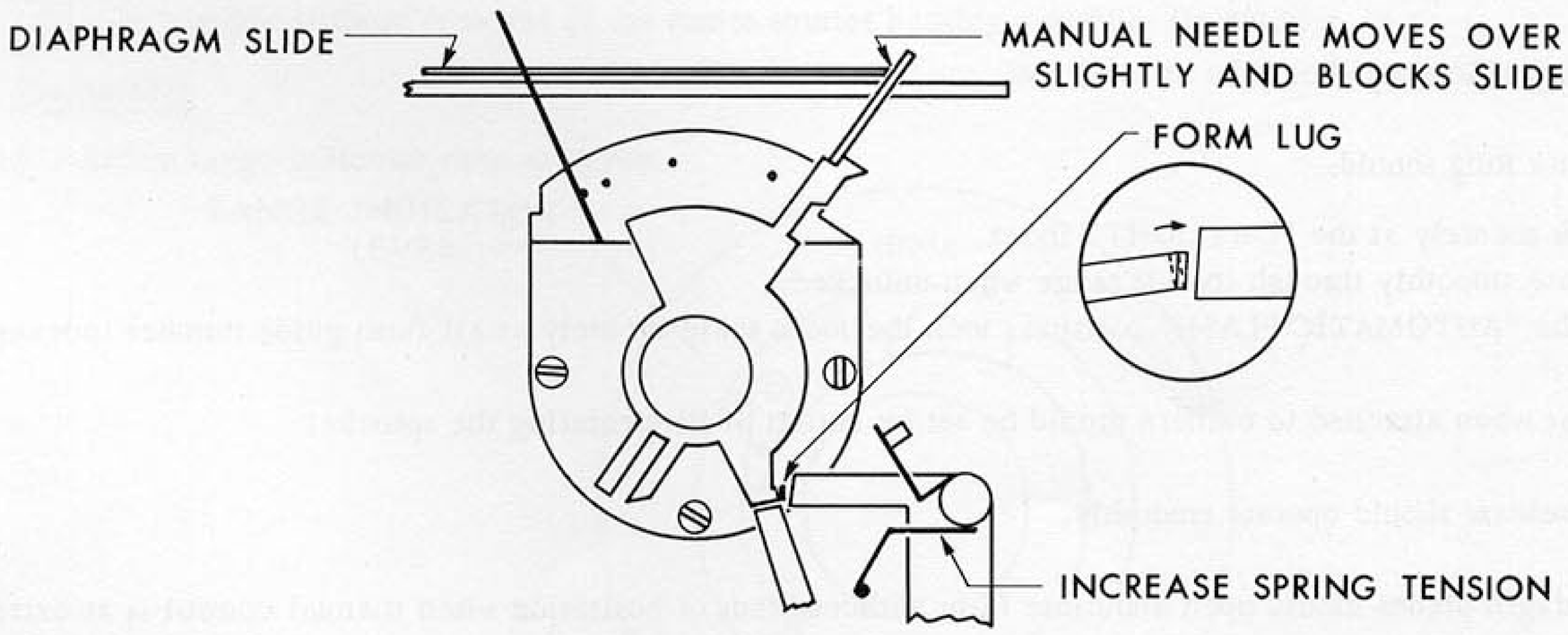

Usually the "MAN" signal in the finder is uncovered to some extent at this time, but it is rarely noticed. Correction for this condition is somewhat limited, however, increasing the lock lever spring tension and a slight adjustment of the lock lug on the manual control lever (as shown above) will help in camming the control lever back to a locked location when the release button is released. Care should be used in that too much spring tension may prevent locking the manual lever in "AUTOMATIC" with the knurled set wheel.

V. SHUTTER

NOTE: The Motormatic shutter in many respects is similar to the Automatic 35. Basic differences are:

1. Four shutter speeds: 1/40, 1/80, 1/125, and 1/250.
2. Automatic flash provision for 5 to 25 feet, which ties the focus ring and diaphragm control together when set at the proper film index number.
3. Synchronization for flash bulbs: AG1, M2, M5, or M25 at 1/40 second only (electronic flash at all speeds).
4. Diaphragm readings in f/numbers.

SPECIFICATIONS

34. Speed (total time):

1/40 second	- 28 to 34 milliseconds	1/125 second	- 9 to 13 milliseconds
1/80 second	- 13 to 18 milliseconds	1/250 second	- 4.5 to 9 milliseconds

35. Flash contact should occur just before shutter blades reach full aperture position (approximately 1/16" of blades showing in aperture).

36. Contact efficiency should be at least 75%.

37. Selector Ring should:

    a) Lock securely at the "DAYLIGHT" index.
    b) Rotate smoothly through its full range when unlocked.
    c) In the "AUTOMATIC FLASH" position, lock the focus scale securely at all flash guide number indexes.

38. Shutter when attached to camera should be set by action of film rotating the sprocket.

39. Body release should operate smoothly.

40. Diaphragm blades should open and close fully without binds or hesitation when manual control is at extreme left (f/2.8) in curved window and body release is depressed and released slowly.

41. Lens should be focused on an object 15-feet from film plane at full aperture. Permissible focus error is 1/3 the depth of focus at full aperture. This is equivalent to approximately 1/16" on either side of stationary index mark.

42. Focus mount should:

    a) Rotate smoothly.
    b) Have detent action at the "CLOSE", "GROUP", and "SCENE" indexes, and actuate the flag in finder to indicate these positions.
    c) Have sufficient spring tension to prevent accidental movement during normal use.

DISASSEMBLY WITH REASSEMBLY NOTES

NOTE: No extensive repairs to the shutter mechanism can be made without complete removal of the shutter mechanism. The components which can be repaired or replaced from the front without removal of the shutter are: lens nameplate, focus ring, front lens and mount, focus stop ring, tension washer, focus range indicator cam, and the center lens and retainer.

43. Front Lens

43.1 Disassembly

a) Set selector ring at daylight range index (green arrows in alignment) and set focus ring at "INF".
b) Remove nameplate screws and lift off focus ring (#1).
c) Remove front lens (#2) rotate counter-clockwise, focus stop ring (#3), tension washer (#4), and range indicator cam (#5).

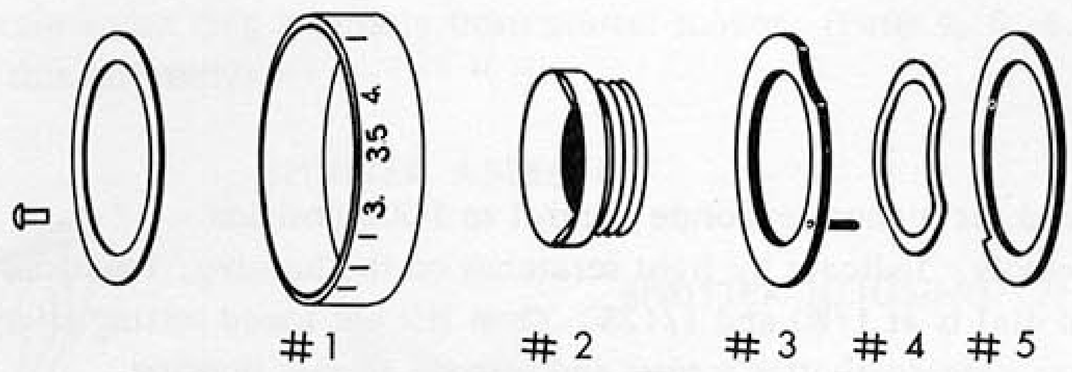

NOTE: The balance of the assembly is retained by the staked range indicator lever and no further disassembly is possible without removal of the entire shutter housing assembly (Instruction 45.1).

43.2 Reassembly

a) Position range indicator cam as shown:

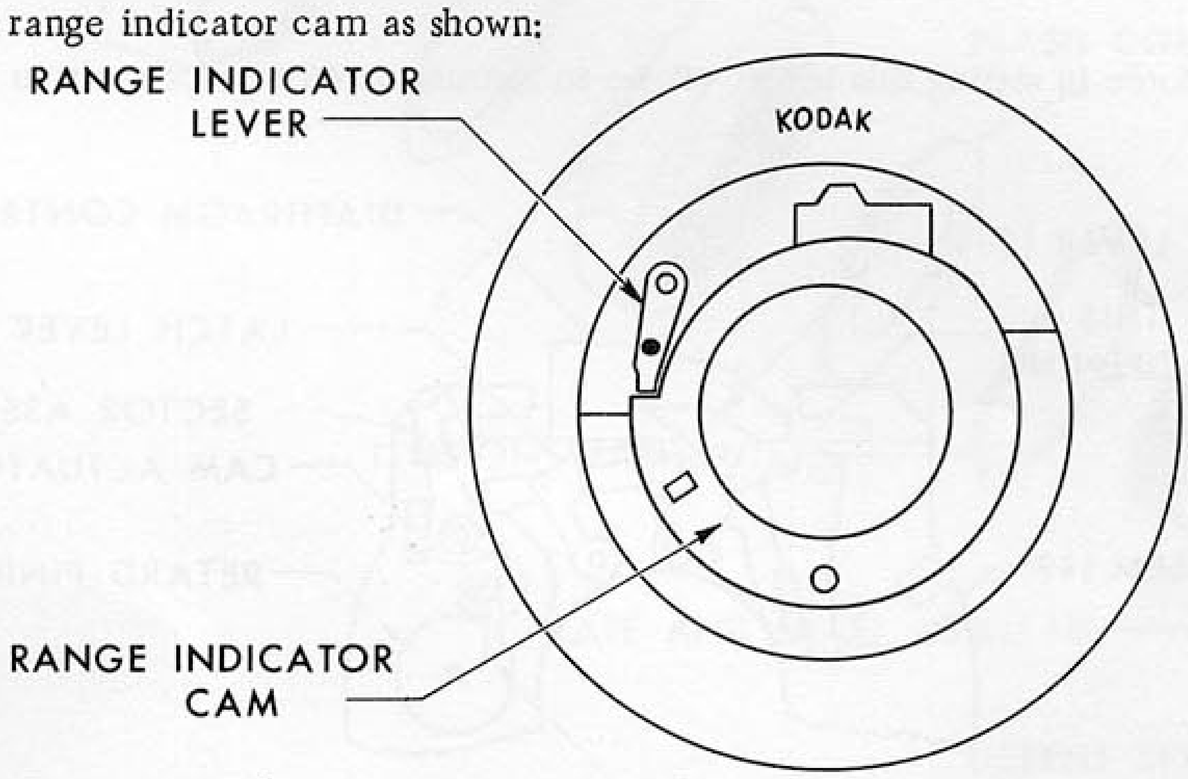

b) Place tension washer (#4) convex side up, (refer to Sketch in Instruction 43.1), and fit focus stop ring (#3) engaging the two pins in the range indicator cam (#5).
c) Hold ring tension washer and cam in position and replace front lens (#2). Be sure that range indicator lever is in contact with outside diameter of range indicator cam and that focus stop ring (when rotated full clockwise) stops with the two holes (for nameplate screws) parallel to bottom of camera.
d) Replace focus ring, nameplate, and screws.
e) Refer to Instruction 44. Focusing Instructions.

44. Focusing Instructions

44.1 Ground Glass Focusing

a) Ground glass focus plane - .007" to .009" back of frame.
b) Subject distance - 15 feet.
c) Manual exposure control - f/2.8.
d) Rotate sprocket one revolution from index mark, depress and hold down body release.
e) Rotate sprocket in either direction (approximately 1/4 turn) until a slight click is heard, then reverse sprocket rotation until blades open. Hold in this location and slip a suitable wedge between case and sprocket.
f) Rotate focus ring to produce best focus on ground glass; loosen nameplate screws and rotate ring (only) to 15 feet index mark, then tighten screws securely.

44.2 Focus Analyzer

a) Focus analyzer - 15 feet.
b) Manual exposure control - f/2.8.
c) Load camera with film, wind mechanism, then trip several times, holding body release down last time.
d) Push rewind release, rewind film until shutter clicks (approximately 1/3 rotation of rewind knob), then advance film with wind knob (approximately 1/4 turn) until shutter blades open.
e) Rotate focus ring to produce best focus, loosen nameplate screws and rotate ring (only) to 15 feet index mark, then tighten screws securely.

45. Shutter Housing Assembly

45.1 Disassembly (from camera)

a) Set shutter (rotate sprocket) and set manual exposure control to f/2.8 position.
b) Remove diaphragm plate assembly. Indicate by light scratches on the housing, locations of the right end of speed slide when the speed dial is at 1/80 and 1/125. Then lift out speed setting slide.
c) Open camera back and remove case-to-shutter screws and remove shutter housing.

45.2 Reassembly (to camera)

a) Set shutter. Set manual exposure control at f/2.8 and rotate sprocket to position shutter setting lever (part of film wind mechanism) at extreme right end of its travel.
b) Rotate focus ring to "INF" position and push range indicator arm (#8) lightly toward the rear lens.

CAUTION: Do not use force in setting this lever. (Refer to Instruction 46.6 i for position of lever on shaft).

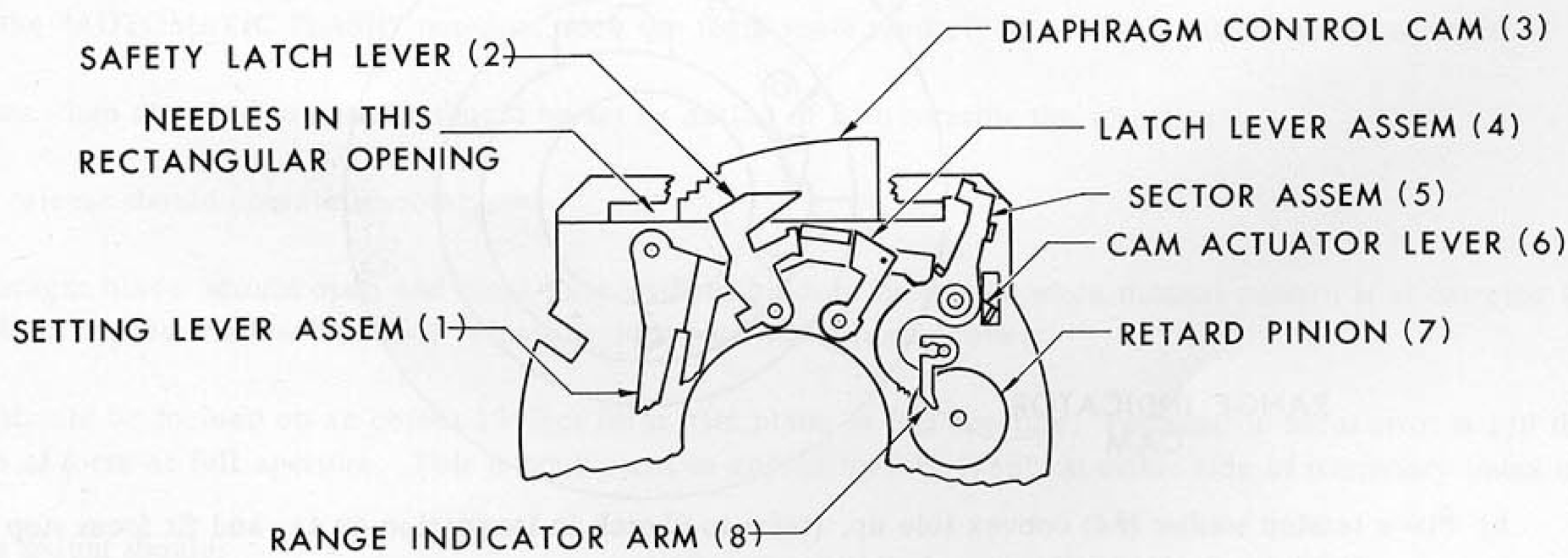

c) Install front assembly, making sure manual set lever and meter needle are entered in the rectangular opening at the top left side of the assembly.
d) Depress body release partially to position lug on release lever under cam actuator lever (#6).
e) Hold assembly lightly in position and push focus indicator lever (directly under right finder window) toward center of camera. Press shutter into position and trip body release to actuate shutter. Check action of shutter and body release, and of range indicator in finder, to be sure all components are engaged.
f) Replace case-to-shutter screws.

46. Shutter Mechanism

46.1 Disassembly (from mount)

a) Remove:

1. Shutter housing (Instruction 45.1).
2. Front lens assembly (Instruction 43.1).
3. Range indicator arm (#8 in Figure 45.2).

b) Remove three screws on front of assembly. (Note location of the two focus ring stop screws).

c) Separate index ring assembly from shutter mount. (Parts 4, 5, 6, 7, 8, and 9 will come off with this assembly).

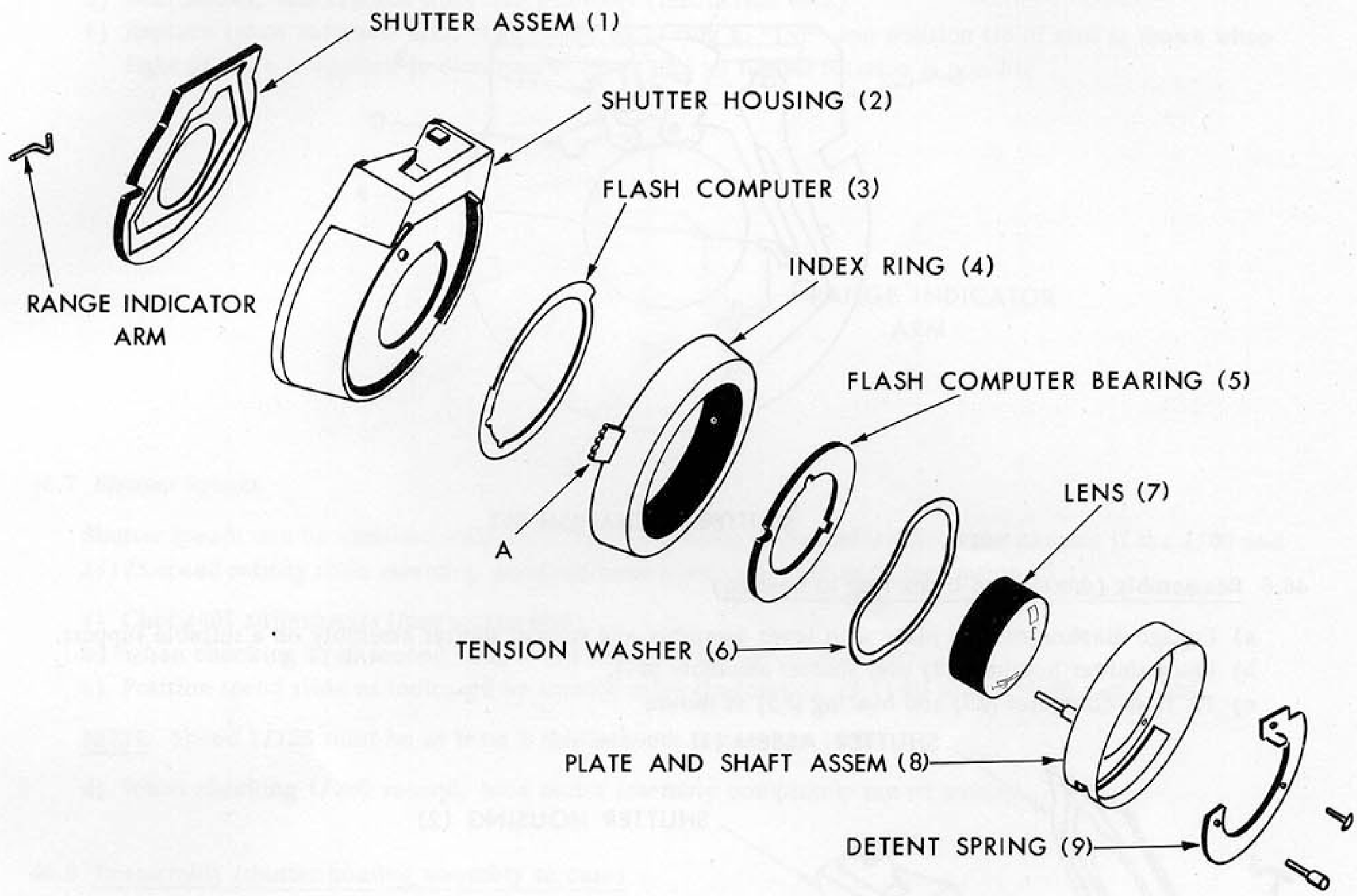

d) Remove shutter (#1) and flash computer cam (#3) from shutter housing (#2).

46.2 Disassembly (index ring assembly)

a) Depress lock lever (A) on index ring and remove plate and shaft assembly (#8). Parts 7, 8, and 9 will come off this assembly.

b) Remove tension spring (#6) and flash computer bearing (#5).

46.3 Disassembly - Shutter Plates (diaphragm and blades)

Separate plates in same manner as in Automatic 35 shutter.

46.4 Reassembly - Shutter Plates (diaphragm and blades)

After reassembly of the plates, it is suggested that the two threaded bushings be carefully re-staked to the diaphragm plate, using a small pin punch.

REASON: In a few cases, severe jars have caused a separation of the diaphragm plate from these studs.

46.5 Shutter Adjustment

a) Set shutter. Setting lever (#1) should be caught by safety lever (#2) and there should be no contact by the latch lever (#3) on the surface of lug (A) on setting lever.
b) Set shutter. With safety lever (#2) released, setting lever (#1) should be caught by latch lever (#3). There should be no tendency for the safety lever (#2) to re-hook itself, and shutter blades should not start to open by contact of setting lever (#1) with blade actuating lever (#4 - Arrow B) until latch lever (#3) is released.
c) Pin in setting lever (#1 -not shown) should contact the lug (C) on the blade actuating lever (#4) just as the tip (D) leaves the sector assembly (not shown):

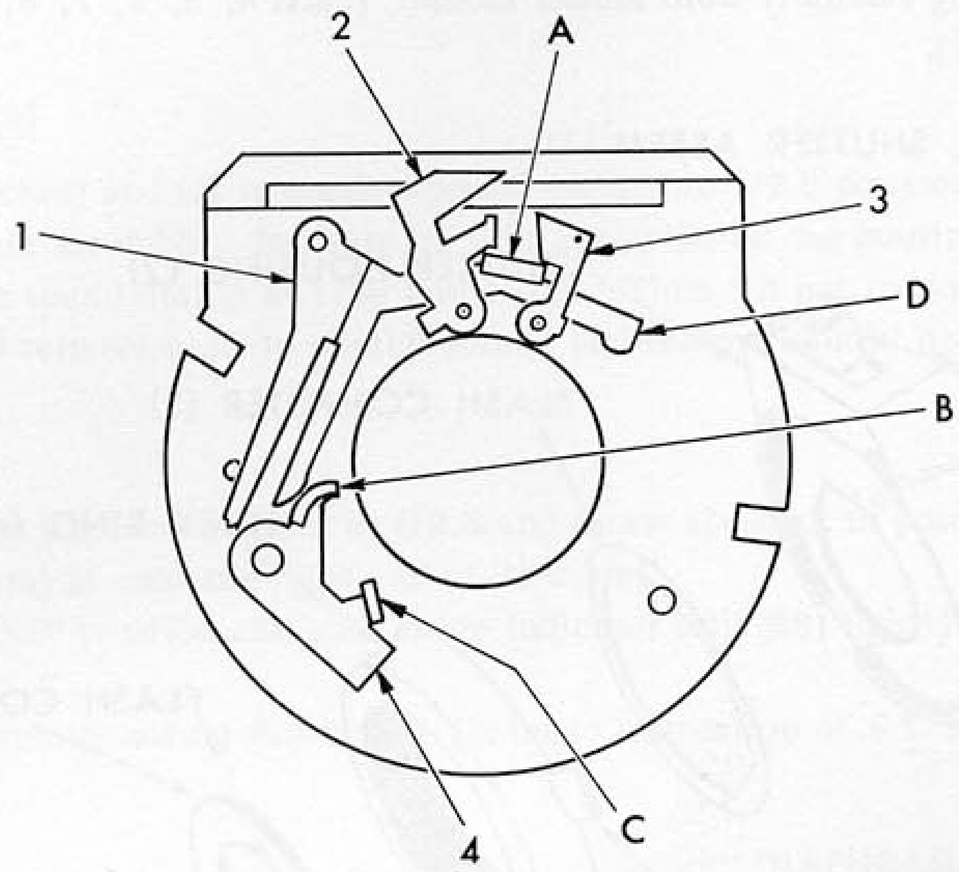

SHUTTER MECHANISM SET

46.6 Reassembly (shutter and index ring to housing)

a) Engage diaphragm cam plate with lever assembly and support shutter assembly on a suitable support.
b) Place shutter housing (#2) over shutter assembly (#1).
c) Fit flash computer (#3) and bearing (#5) as shown:

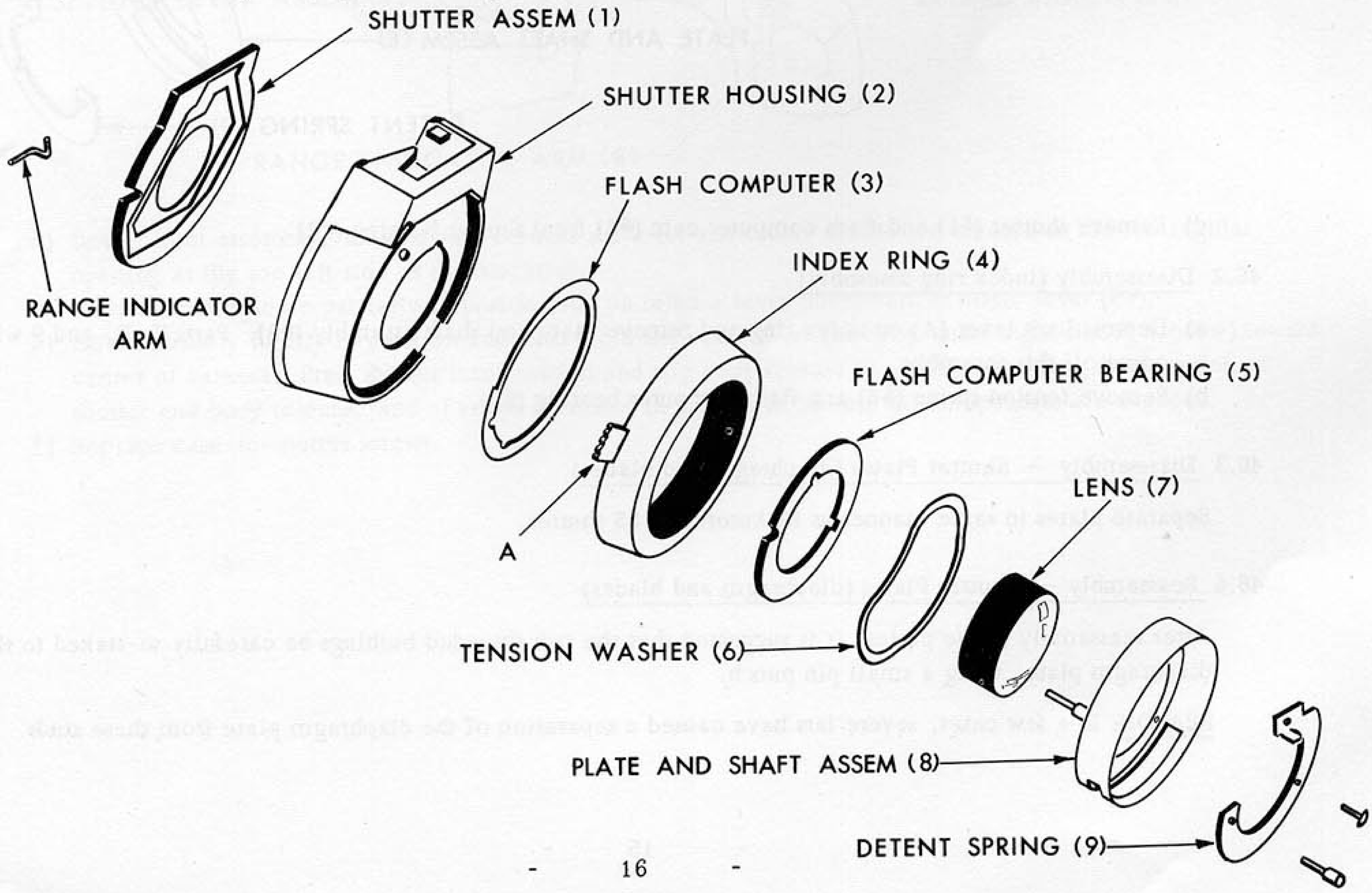

d) Place index ring (#4) in position, engaging it with flash computer (#3), and fit tension washer (#6) convex side up.

e) Hold index ring (#4) in place, depress lock lever (A), and replace lens (#7) and plate and shaft assembly (#8).

f) Replace detent spring (#9) and screws (focus stop ring screws - one at top and one below focus indicator lever).

g) Check action of index ring for:

1. Smoothness of operation.
2. Locking at "DAYLIGHT" range (green arrows).
3. Actuation of diaphragm cam when lock lever is in open area of plate and shaft assembly.

h) Seal screws, and replace front lens assembly (Instruction 43.2).

i) Replace range indicator arm, then rotate focus ring to "INF" and position tip of arm as shown when light pressure is applied in direction of arrow and no further rotation is possible.

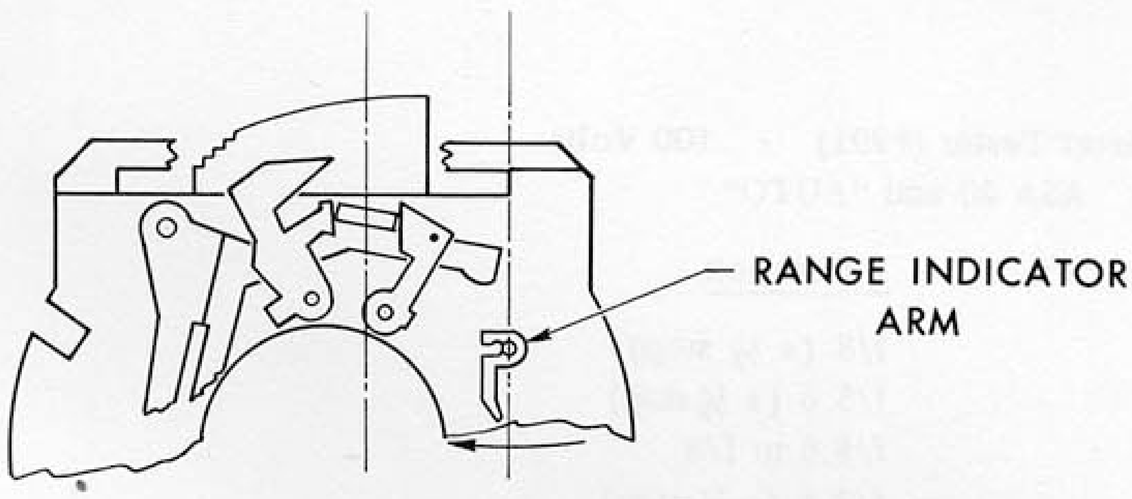

46.7 Shutter Speeds

Shutter speeds can be checked with the complete housing disassembled from the camera if the 1/80 and 1/125 speed setting slide assembly positions have been indicated as in instruction 45.1.

a) Check all adjustments (Instruction 46.5).

b) When checking 1/40 second, allow full travel of the sector assembly.

c) Position speed slide as indicated by scratch mark (Instruction 45.1) for speeds 1/80 and 1/125.

NOTE: Speed 1/125 must be at least 2 milliseconds faster than 1/80.

d) When checking 1/250 second, hold sector assembly completely out of contact.

46.8 Reassembly (shutter housing assembly to case)

Refer to Instruction 45.2.

VI. EXPOSURE CONTROL

Automatic Control

The selection of a "Film Speed (ASA) Setting" and a "Shutter Speed" combine to control the amount of light striking the meter cell through the "Variable Aperture Drum". From this point on the control of the diaphragm is identical with the Automatic 35 Camera. This method of control eliminates the switch assembly formerly used on the Automatic 35.

Manual Control

Identical with Automatic 35.

SPECIFICATIONS

47. Meter Deflection

Settings: Exposure Meter Tester (#991) - 100 Volts
Camera - ASA 20 and "AUTO".

Shutter Speed	Deflection
1/40 second	f/8 (± ½ stop)
1/80 second	f/5.6 (± ½ stop)
1/125 second	f/5.6 to f/4
1/250 second	f/2.8 (± ½ stop)

48. With all light excluded from the photocell, some part of the meter needle should be on the first dot on the meter scale. (Visible only when f/scale is removed).

49. Manual and meter needles should allow the diaphragm blades to open the same distance when the same f/number is indicated.

50. Signal "MAN" should be visible in finder at all times except when manual pointer is at "AUTOMATIC".

51. Manual pointer should remain locked in automatic position until released by lock button and actuated by knurled wheel.

52. Knurled wheel should actuate manual pointer through its entire range without binds or hesitation.

53. Manual pointer lock button should be free of binds and should return by spring action of lock lever.

54. ASA dial should:

a) Rotate without undue force through its full travel (ASA 10 to 800) when center button is depressed.
b) Lock securely at each number when center button is released.

NOTE: If it is impossible to rotate the ASA dial through its entire range, it is because of the interlocking of the speed and ASA dials. A change in the setting of the speed dial will permit the other dial to be rotated.

DISASSEMBLY WITH REASSEMBLY NOTES

55. Disassembly of meter from camera, adjustment of the meter needle for zero and for binds on the upper guide bar, and reassembly of meter to camera are identical with the Kodak Automatic 35.

56. Diaphragm Opening

    Diaphragm sizes are controlled solely by the deflection of the meter needle or the manual control needle. Since it is recommended that these needles not be bent sideways, there is no provision for adjusting diaphragm sizes.

57. Manual Exposure Control - Instruction 33.

Kodak