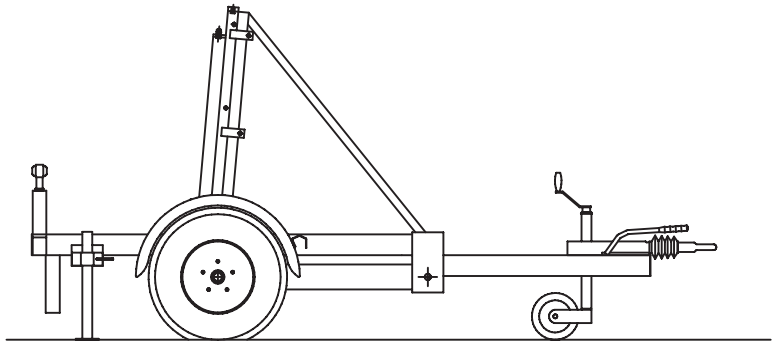

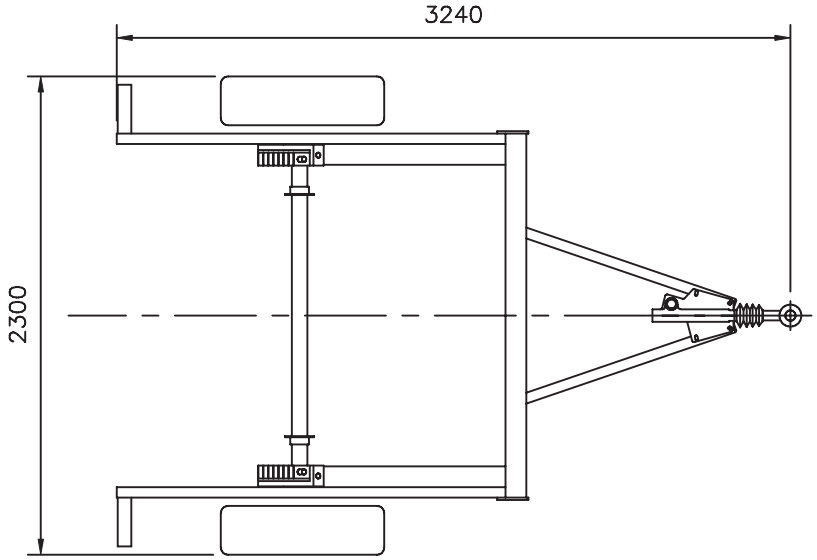

FULL EEC SPECIFICATION

GROSS WEIGHT	–	2000	KG
UNLADEN WEIGHT	–	450	KG
DRAWBAR LOAD	–	100	KG
AXLE WEIGHT	–	1900	KG
CAPACITY	–	1550	KG
TRAILER WIDTH	–	2300	mm
MAX DRUM DIA	–	2150	mm
MIN DRUM DIA	–	750	mm
MAX DRUM WIDTH	–	1400	mm
TOWING HEIGHT	–	450	mm (LADEN)
TOWING EYE	–	40	mm
SPINDLE DIA	–	50	mm
TYRES	–	195x14 C	
MUDGUARDS	–	THERMOPLASTIC CYCLE TYPE	
DRUM LIFT	–	HYDRAULIC WITH MANUAL LOCK	
FINISH	–	2 COAT COMMERCIAL	

REF	ISSUE LEVEL	DATE	REF	ISSUE LEVEL	DATE		
						DATE	15/8/2007
						SCALE	1=25
						NAME	

TITLE CDT 1.55 GENERAL ARRANGEMENT

DRG No. CDT1.55/001