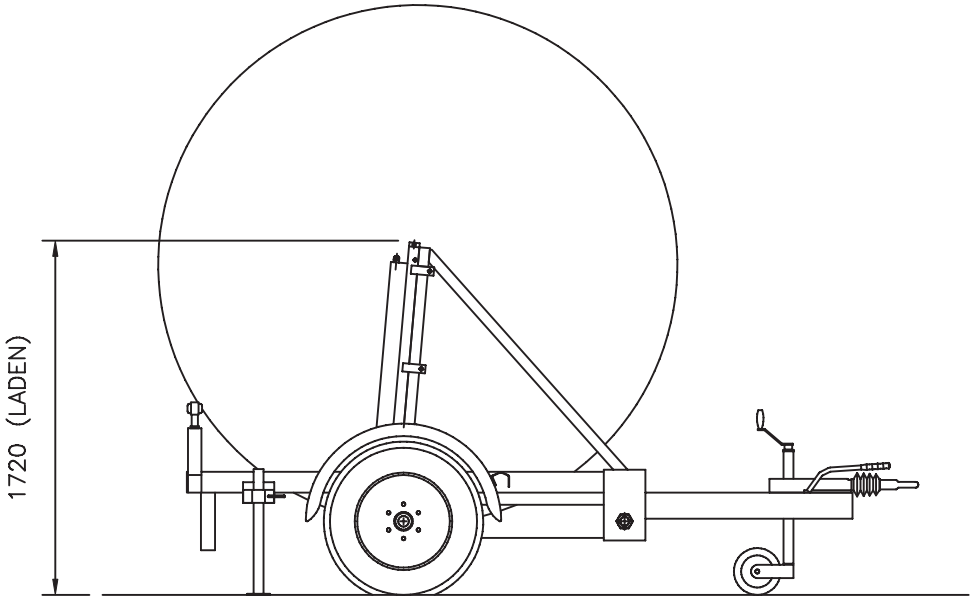

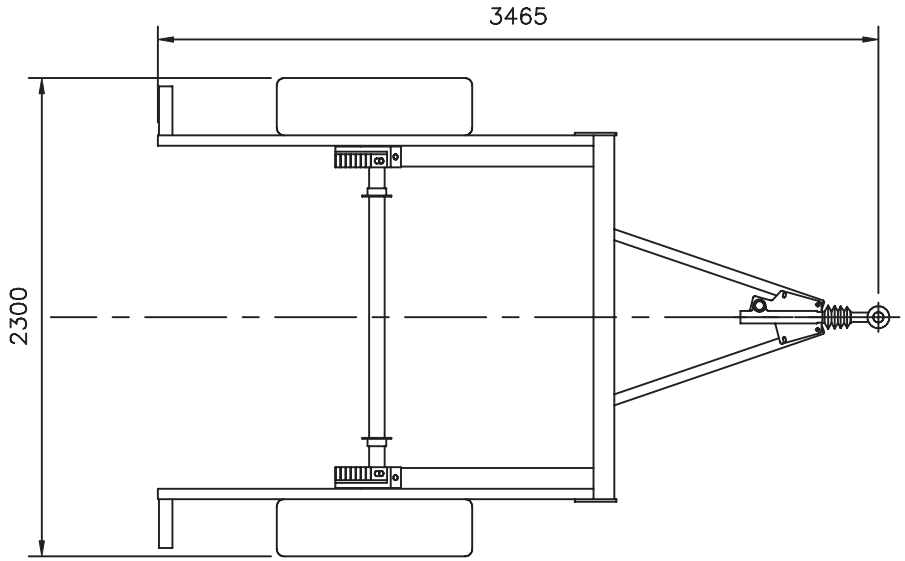

EEC SPECIFICATION

GROSS WEIGHT	–	3100	KG
UNLADEN WEIGHT	–	700	KG
DRAWBAR LOAD	–	150	KG MAX
AXLE WEIGHT	–	3000	KG
CAPACITY	–	2400	KG
TRAILER WIDTH	–	2300	mm
MAX DRUM DIA	–	2550	mm
MIN DRUM DIA	–	1100	mm
MAX DRUM WIDTH	–	1365	mm
TOWING HEIGHT	–	530	mm (LADEN)
TOWING EYE	–	40	mm
SPINDLE DIA	–	76	mm
ELECTRICS	–	FULL EEC ROAD GOING	
TYRES	–	215/75 R17.5	
MUDGUARDS	–	THERMOPLASTIC CYCLE TYPE	
DRUM LIFT	–	HYDRAULIC WITH MANUAL LOCK	
FINISH	–	2 COAT COMMERCIAL	

REF	ISSUE LEVEL	DATE	REF	ISSUE LEVEL	DATE

DATE	13/8/2007
SCALE	1=25
NAME	

TITLE CDT 2.4 GENERAL ARRANGEMENT

DRG No. CDT2.4/001