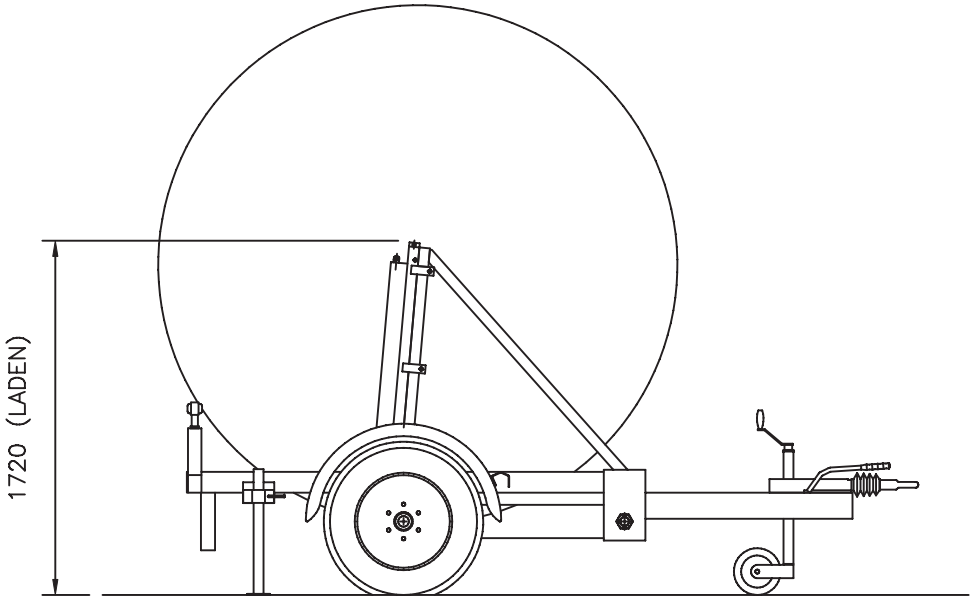

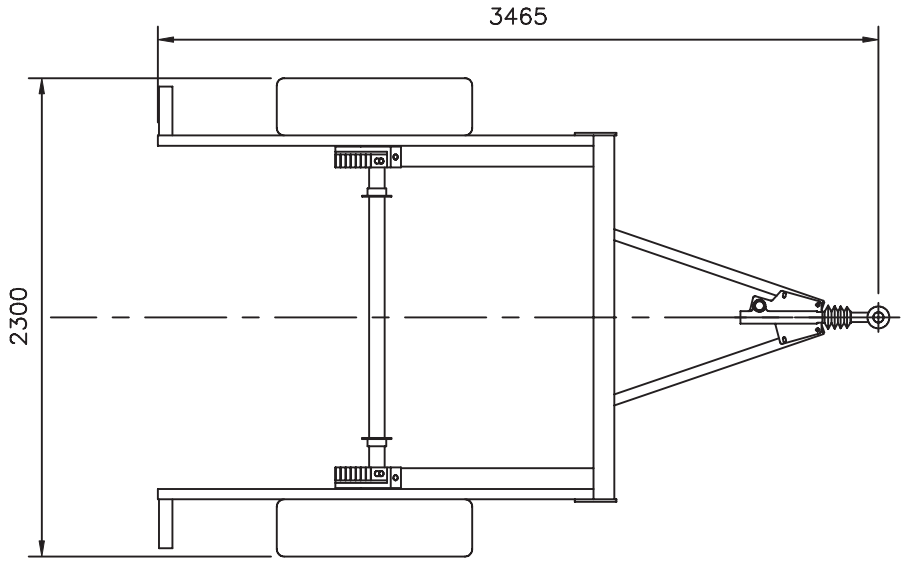

FULL EEC SPECIFICATION

GROSS WEIGHT	–	3500	KG
UNLADEN WEIGHT	–	700	KG
DRAWBAR LOAD	–	150	KG
AXLE WEIGHT	–	3350	KG
CAPACITY	–	2800	KG
TRAILER WIDTH	–	2300	mm
MAX DRUM DIA	–	2550	mm
MIN DRUM DIA	–	1100	mm
MAX DRUM WIDTH	–	1340	mm
TOWING HEIGHT	–	530	mm (LADEN)
TOWING EYE	–	40	mm
SPINDLE DIA	–	76	mm
TYRES	–	215/75 R17.5	
MUDGUARDS	–	THERMOPLASTIC CYCLE TYPE	
DRUM LIFT	–	HYDRAULIC WITH MANUAL LOCK	
FINISH	–	2 COAT COMMERCIAL	

REF	ISSUE LEVEL	DATE	REF	ISSUE LEVEL	DATE		
						DATE	13/8/2007
						SCALE	1=25
						NAME	

TITLE
CDT 2.8 GENERAL ARRANGEMENT

DRG No. CDT2.8/001