ALL DIMENSIONS IN mm U.O.S.	DO NOT SCALE DRAWING	ALL DIMENSIONS ±1mm U.O.S.

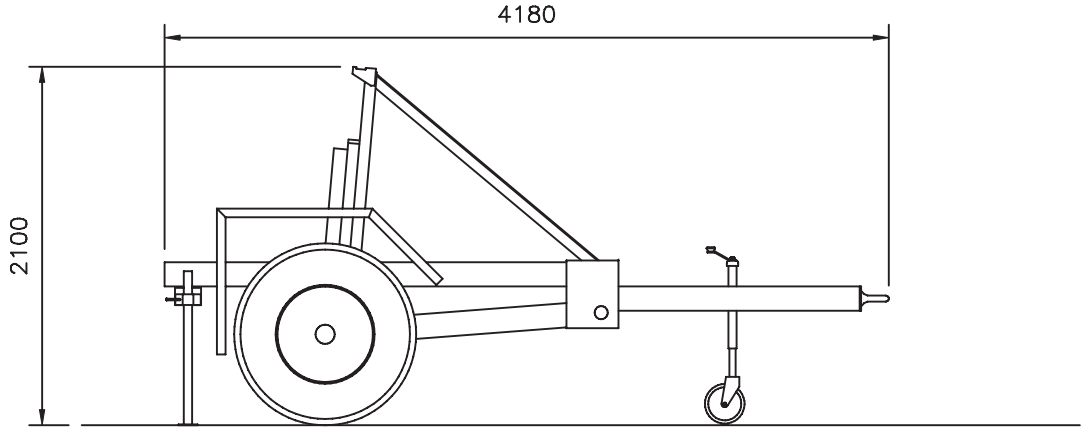

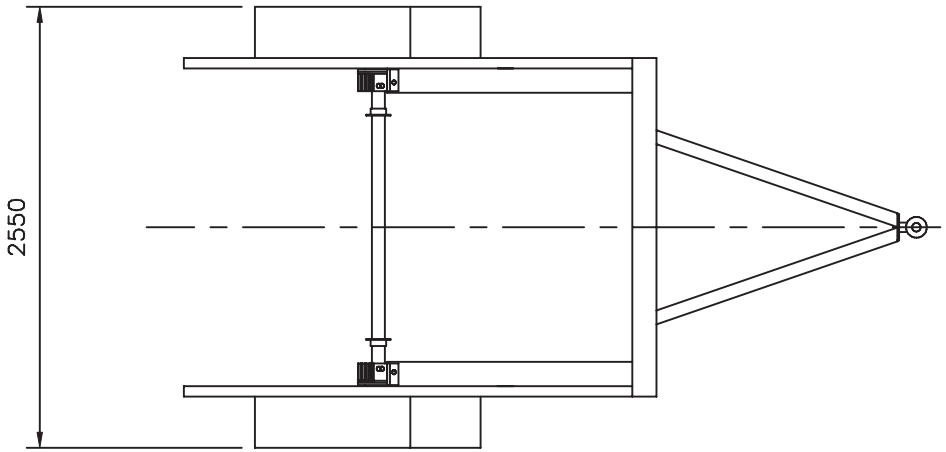

ROAD SPECIFICATION - 60Kmh

GROSS WEIGHT	–	6500	KG
UNLADEN WEIGHT	–	1350	KG
DRAWBAR LOAD	–	300	KG
AXLE WEIGHT	–	6300	KG
CAPACITY	–	5150	KG
TRAILER WIDTH	–	2550	mm
MAX DRUM DIA	–	3100	mm
MIN DRUM DIA	–	1350	mm
MAX DRUM WIDTH	–	1390	mm
TOWING HEIGHT	–	570	mm (LADEN)
TOWING EYE	–	40 DIN / 50 ø / 76 ø	
SPINDLE DIA	–	76	mm
ELECTRICS	–	EEC ROAD GOING	
BRAKES	–	OVERRUN	
TYRES	–	11R 22.5	
SPEED	–	60 Kmh	
MUDGUARDS	–	STEEL FABRICATED	
DRUM LIFT	–	HYDRAULIC WITH MANUAL LOCK	
FINISH	–	2 COAT COMMERCIAL	

SITE SPECIFICATION - 25Kmh

GROSS WEIGHT	–	8800	KG
UNLADEN WEIGHT	–	1350	KG
DRAWBAR LOAD	–	300	KG
AXLE WEIGHT	–	8500	KG
CAPACITY	–	7450	KG
TRAILER WIDTH	–	2550	mm
MAX DRUM DIA	–	3100	mm
MIN DRUM DIA	–	1350	mm
MAX DRUM WIDTH	–	1390	mm
TOWING HEIGHT	–	570	mm (LADEN)
TOWING EYE	–	40 DIN / 50 ø / 76 ø	
SPINDLE DIA	–	76	mm
ELECTRICS	–	EEC ROAD GOING	
BRAKES	–	OVERRUN	
TYRES	–	11R 22.5	
SPEED	–	25 Kmh	
MUDGUARDS	–	STEEL FABRICATED	
DRUM LIFT	–	HYDRAULIC WITH MANUAL LOCK	
FINISH	–	2 COAT COMMERCIAL	

REV	DESCRIPTION	DATE	REV	DESCRIPTION	DATE

DATE	
SCALE	1=30
NAME	

TITLE
CDT 5.15

DRG No.