17'
HAWK HILL
18'
HAWK HILL 1

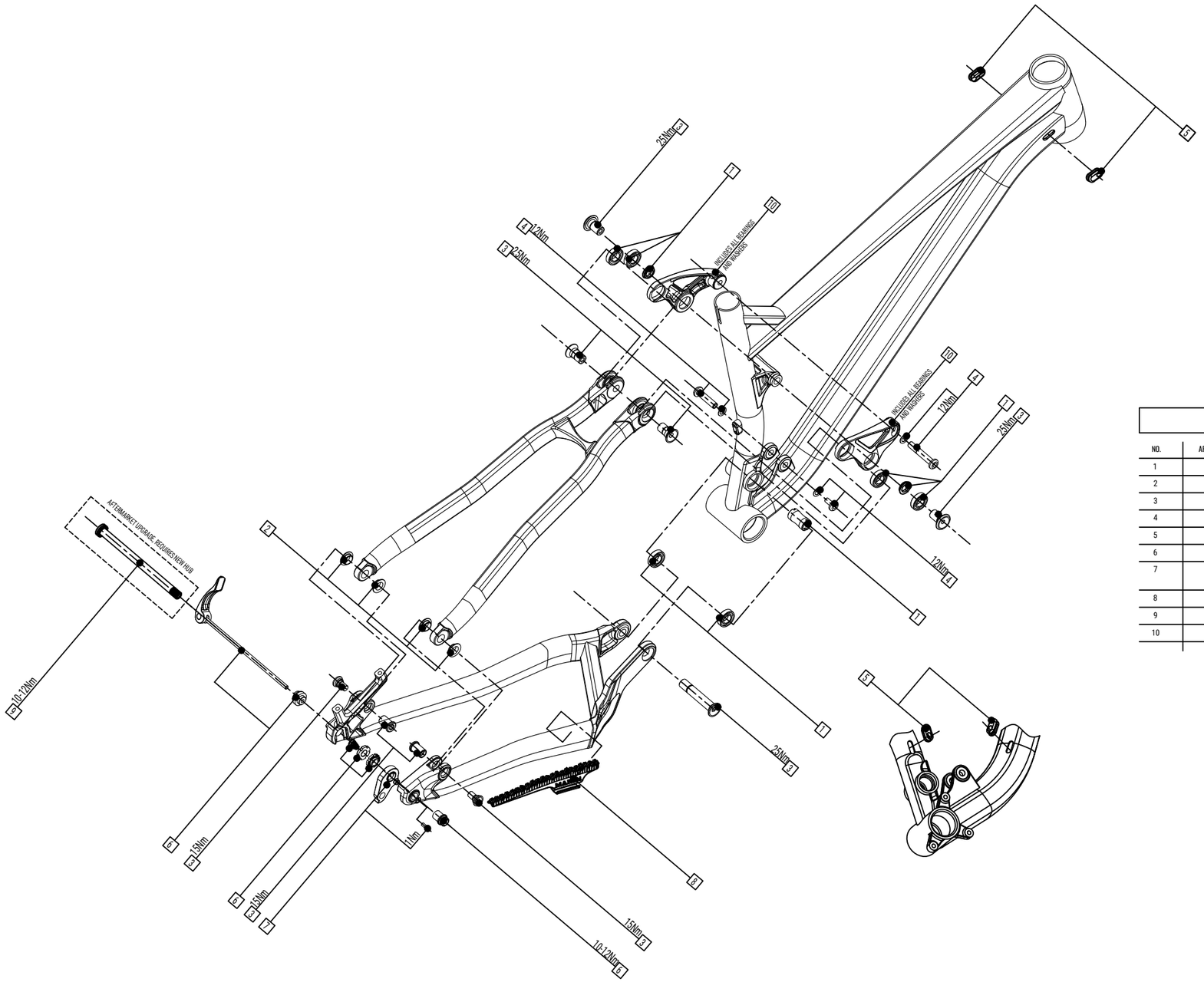

SERVICE PARTS

NO.	ARTICLE CODE	DESCRIPTION	NOTES
1	726902	BEARING KIT A, RUBBER SEALED BEARING 69012RS 12X24X6, QTY 6	
2	726910	J-3 IGUS PLANE BEARING KIT, QTY 4	
3	727350	PIVOT BOLT KIT D	
4	726917	SHOCK BOLT KIT C	
5	726914	INTERNAL CABLE ROUTING RUBBER GROMMET KIT	
6	727334	CLOSED 9 TO 12 QR ASSEMBLY 135MM (142MM)	OE SPEC AXLE
7	726295	HANGER #40 AND MOUNTING BOLT (M4X0.7X10MM SOCKET COUNTERSUNK HEAD CAP SCREW)	
8	732772	CS PROTECTOR SERIES 3 ALLOY	DOES NOT COME STOCK BUT IS COMPATIBLE
9	728551	BOLT ON AXLE KIT 142X12MM	AFTERMARKET UPGRADE, REQUIRES NEW HUB
10	726907	ROCKER LINKAGE, MULTITRAC #1	

TECHNICAL DATA

FORK AXLE TO CROWN		OE SPEC: 509MM	MAX: 519MM
REAR WHEEL TRAVEL		120MM	
TIRE COMPATIBILITY		FRONT: 27.5X2.5"	REAR: 27.5X2.5"
HEADSET DIM		UPPER: ZS44	LOWER: ZS56
SHOCK INFO		E2E: 190MM	STROKE: 51MM
SHOCK HARDWARE		UPPER: 22.2XM8	LOWER: 22.2XM8
SEATPOST DIAMETER		30.9MM	
SEAT COLLAR DIAMETER		34.9MM	
CHAINLINE		49MM	
REAR BRAKE MOUNT		POST MOUNT 160MM/ MAX 180MM	
REAR AXLE		141 CLOSED 9-12 (STOCK)/ UPGRADABLE TO 142X12	
BEARING SPEC	6901V2RS	12X24X6	QTY: 6
	IGUS PN: JFM-1214-05	12X14X5	QTY: 4

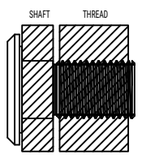

CAUTION

FOR ALL BOLTS SHOWN ON BIKES RECOMMENDED TO APPLY GREASE AND THREAD LOCKER

THE APPLICATION AREA SHOWN AS LEFT
THREAD LOCKER ON THREAD AREA ONLY
GREASE ON SHAFT AREA ONLY
FOR THOSE BOLTS WITHOUT SHAFT, THREAD LOCKER NEEDED ONLY.

MARIN
BIKES CALIFORNIA