NOMINAL IRON PIPE SIZE		PAD THK.		STANDARD ANGLE "A"
inches	millimeters	in.	mm	
UP to 4"	UP to 102	1/4"	6	90°
6" to 10"	152 to 254	1/4"	6	60°
12" to 20"	305 to 508	1/4"	6	30°
24" to 48"	610 to 1220	3/8"	10	30°

The above are APP's Standard Angles of Pipe Coverage. Other Sizes Available on Request.

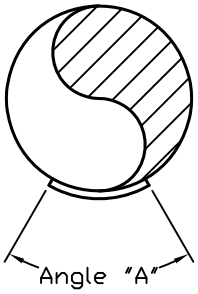

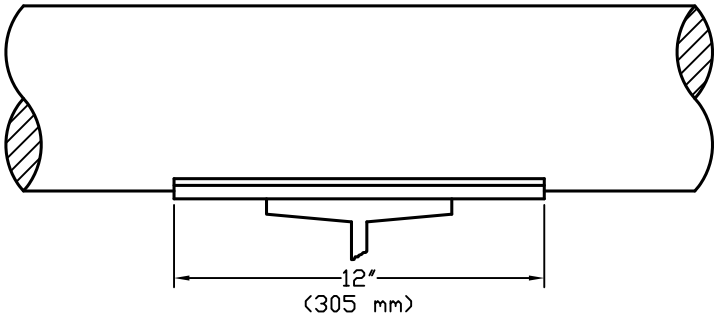

HOW TO ORDER:

Description:

Wear Pad 6" X ¼ " X 60° X 12"

6" Iron Pipe Size
¼" Wear Pad Thickness (available in varied thicknesses)
60° Pipe Coverage (Angle "A")
12" Wear Pad Length

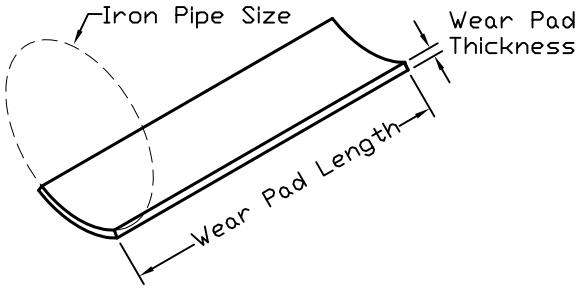

Part Number:

WP 06 00250 060 12

- WP — APP Wear Pad Designation
- 06 — Iron Pipe Size (IPS)
- 00250 — Wear Pad Thickness in Decimal Inches
- 060 — Degrees of Pipe Coverage
- 12 — Wear Pad Length in Inches

NOTES & SPECIFICATIONS:

1. Uninsulated Wear Pad shall be made of custom formulated Vinyl Ester Resin as manufactured by Advanced Piping Products.
2. To install APP Wear Pads follow APP Installation Instructions
3. Stock Sizes: 1/2" (13mm) to 36" (914mm) with Standard Angles of Coverage.
4. Other Lengths, Degrees of Coverage, & Thickness are available upon request.
5. Operating Temp Limit: -320° F (-195° C) to +400° F (+204° C).

ITEM	QTY	DESCRIPTION	MATERIAL
1	1	Wear Pad	Vinyl Ester Resin

CUSTOMER
DATE:
CO NAME:
CONTACT:
TEL. NO.
E-MAIL:
RFQ:
PO:
REF:

DWN.	DATE 03/12/15	
CHK.		
ENG.		
MFG.		
APPR.		
NEXT ASSY	QTY	

ADVANCED PIPING PRODUCTS
5611 Guhn Road Suite A1 Houston, TX 77040
Tel. 713-956-2922 Fax 713-956-4090
www.appinc.co

DWG DESCRIPTION
APP 12" (305mm) Long Wear Pad

SIZE		REV.
A	WP120315	0
SCALE None		SHEET 1 OF 1