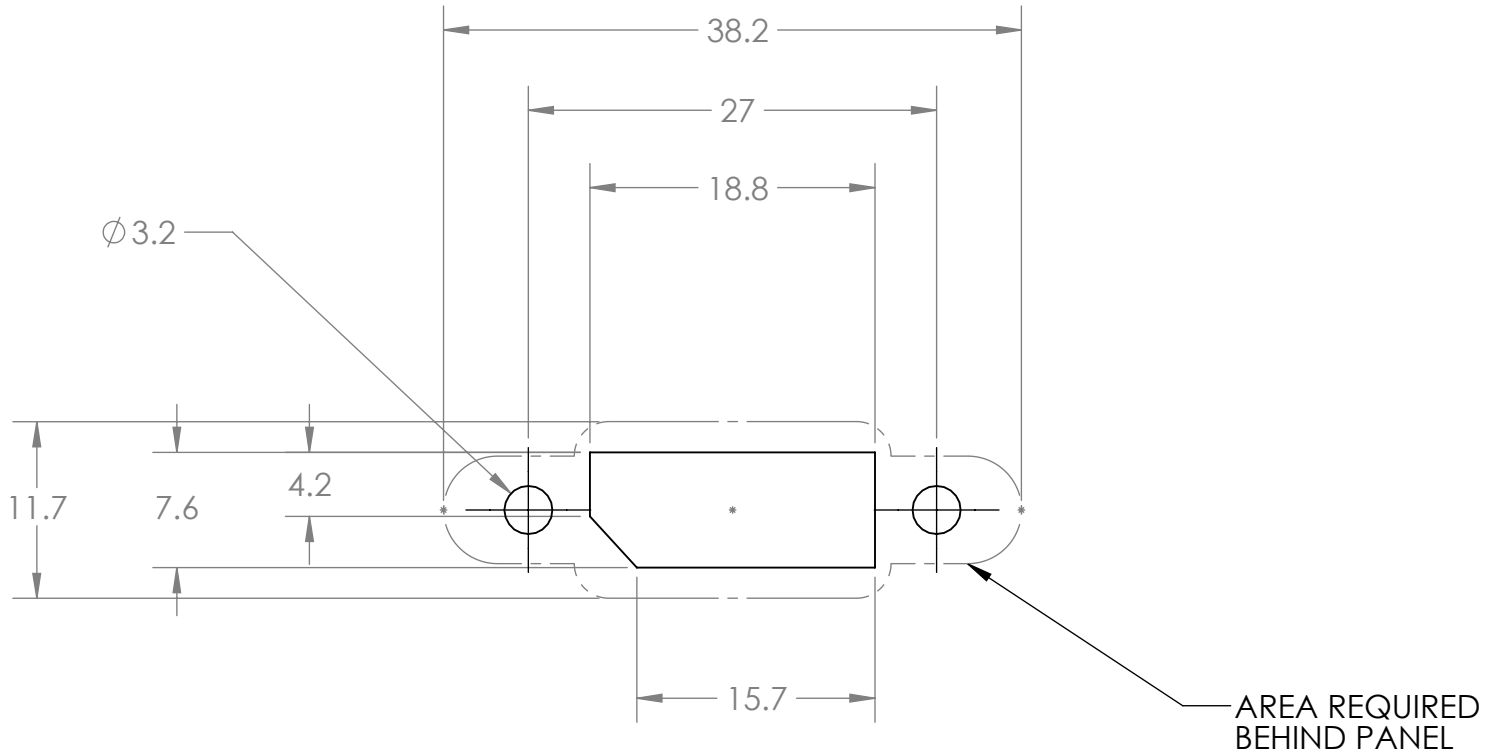

			UNLESS OTHERWISE SPECIFIED:		NAME	DATE
			DIMENSIONS ARE IN MM	DRAWN	NWC	9/5/13
			STANDARD TOL ±0.3	CHECKED		
				ENG APPR.		
				MFG APPR.		
				Q.A.		
				COMMENTS:		
P/N	L	T				
LENGTH TABLE			DO NOT SCALE DRAWING			

DATAPRO

TITLE:

DISPLAYPORT CUTOUT

SIZE	DWG. NO.	REV
A		

SCALE: 2:1 | WEIGHT: | SHEET 1 OF 1

PROPRIETARY AND CONFIDENTIAL

THE INFORMATION CONTAINED IN THIS DRAWING IS THE SOLE PROPERTY OF DATAPRO INTERNATIONAL, INC. ANY REPRODUCTION IN PART OR AS A WHOLE WITHOUT THE WRITTEN PERMISSION OF DATAPRO INTERNATIONAL, INC. IS PROHIBITED.

5 4 3 2 1