MODEL 3600V
TWIN-LINE® PLANTER
(Mechanical Seed Metering)

OPERATOR & PARTS MANUAL

PM0212 **4/08**

This manual is applicable to: Model: 3600V Twin-Line® Planters
Serial Number: 621654 And On

Record the model number and serial number of your planter along with date purchased:

Model Number _____3600V_____

Serial Number _____

Date Purchased _____

Monitor Serial Number _____

Measured Pulses Per Mile/Km (Radar Distance Sensor) _____

Measured Pulses Per Mile/Km (Magnetic Distance Sensor) _____

SERIAL NUMBER

The serial number plate is located on the planter frame to be readily available. It is suggested that your serial number and purchase date also be recorded above.

The serial number provides important information about your planter and may be required to obtain the correct replacement part. Always provide the model number and serial number to your KINZE® Dealer when ordering parts or anytime correspondence is made with KINZE Manufacturing, Inc.

D05140843

PREDELIVERY/DELIVERY CHECKLIST

TO THE DEALER

Predelivery service includes assembly, lubrication, adjustment and test. This service helps to ensure that the planter will be delivered to the customer ready for field use.

PREDELIVERY CHECKLIST

After the planter has been completely assembled, use the following checklist and inspect the planter. Check off each item as it is found satisfactory or after proper adjustment is made.

- ❑ Recheck to be sure row units are properly spaced and optional attachments are correctly assembled.
- ❑ The row marker blade assemblies have been removed from their shipping location over the planter hitch and installed on the row marker assembly at each end of the planter. See “Row Marker Length Adjustment” in the Machine Operation Section of this manual.
- ❑ Be sure all grease fittings are in place and lubricated.
- ❑ Check planter and make sure all working parts are moving freely, bolts are tight and cotter pins are spread.
- ❑ Check all drive chains for proper tension and alignment.
- ❑ Check for oil leaks and proper hydraulic operation.
- ❑ Check to be sure hydraulic hoses are routed correctly to prevent damage to hoses.
- ❑ Inflate tires to specified PSI air pressure. Tighten wheel lug bolts and lug nuts to specified torque.
- ❑ Check to be sure all safety decals are correctly located and legible. Replace if damaged.
- ❑ Check to be sure all reflective decals and SMV sign are correctly located and visible when the planter is in transport position.
- ❑ Check to be sure safety/warning lights are installed correctly and working properly.
- ❑ Paint all parts scratched in shipment or assembly.
- ❑ Be sure all safety lockup devices are on the planter and correctly located.
- ❑ Check seed meters on test stand to ensure proper performance.
- ❑ Auxiliary safety chain is properly installed and hardware is torqued to specification.

This planter has been thoroughly checked and to the best of my knowledge is ready for delivery to the customer.

_____

(Signature Of Set-Up Person/Dealer Name/Date)

OWNER REGISTER

Name _____ Delivery Date _____

Street Address _____ Model No. 3600V Serial No. _____

City, State/Province _____ Dealer Name _____

ZIP/Postal Code _____ Dealer No. _____

DELIVERY CHECKLIST

At the time the planter is delivered, the following checklist is to be used as a reminder of very important information which should be conveyed to the customer. Check off each item as it is fully explained to the customer.

- ❑ Advise the customer that the life expectancy of this or any other machine is dependent on regular lubrication as directed in the Operator & Parts Manual.
- ❑ Tell the customer about all applicable safety precautions.
- ❑ Along with the customer, check to be sure the reflective decals and SMV sign are clearly visible with the planter in transport position and attached to the tractor. Check to be sure safety/warning lights are in working condition. Tell the customer to check federal, state/provincial and local regulations before towing or transporting on a road or highway.
- ❑ Give the Operator & Parts Manual to the customer and explain all operating adjustments.
- ❑ Read warranty to customer.
- ❑ Complete Warranty And Delivery Report form.

To the best of my knowledge this machine has been delivered ready for field use and customer has been fully informed as to proper care and operation.

_____

(Signature Of Delivery Person/Dealer Name/Date)

AFTER DELIVERY CHECKLIST

The following is a list of items we suggest to check during the first season of use of the equipment.

- ❑ Check with the customer as to the performance of the planter.
- ❑ Review with the customer the importance of proper maintenance and adherence with all safety precautions.
- ❑ Check for parts that may need to be adjusted or replaced.
- ❑ Check to be sure all safety warning signs (decals), reflective decals and SMV sign are correctly located and that decals are legible. Replace if damaged or missing.
- ❑ Check to be sure safety/warning lights are working properly.

_____

(Signature Of Follow-Up Person/Dealer Name/Date)

RETURN THIS COMPLETED FORM TO KINZE® IMMEDIATELY along with Warranty And Delivery Report.
Retain photocopy of this form at dealership for After Delivery Check.

Tear Along Perforation

TABLE OF CONTENTS

TO THE OWNER 1-1

WARRANTY 1-2

INTRODUCTION 2-1

SPECIFICATIONS 3-1

SAFETY PRECAUTIONS 4-1

SAFETY WARNING SIGNS 5-1

MACHINE OPERATION

Auxiliary Hydraulic Option 6-19
Auxiliary Work Lights Package 6-18
Checking Seed Population 6-32
Electronic Seed Monitor System
KINZE Vision® System 6-17
Planter Monitor Module (PMM) 6-17
Even-Row Push Row Unit 6-18
Fertilizer Openers And Attachments 6-20
Field Operation 6-11
Field Test 6-31
Field To Transport Sequence 6-12
General Planting Rate Information 6-33
Hall Effect Sensor 6-30
Hydraulic Drive 6-8
Hydraulic/Electric Operation 6-7
Initial Preparation Of The Planter 6-3
Leveling The Planter 6-4
Liquid Fertilizer Attachment 6-26
Liquid Fertilizer Rate Chart 6-34
Manual Safety Lockup 6-1
Metric Conversion Table 6-30
Planting Speed 6-31
Rear Trailer Hitch 6-29
Ridge Planting 6-6
Rock Guards 6-18
Row Marker Length Adjustment 6-15
Row Marker Operation 6-14
Row Marker Safety Lockup 6-1
Row Marker Speed Adjustment 6-15
Row Unit Air Clutches 6-17
Tire Pressure 6-5
Tongue Safety Pin 6-2
Tractor Preparation And Hookup 6-3
Tractor Requirements 6-3
Transport Latch Locking Pin 6-2
Transport To Field Sequence 6-9
Transporting The Planter 6-30

TABLE OF CONTENTS

ROW UNIT OPERATION

Brush-Type Seed Meter 7-5
Closing Wheel Shield 7-2
Coulter Mounted Residue Wheels 7-17
Covering Discs/Single Press Wheel Adjustment 7-2
Drag Closing Attachment 7-3
Finger Pickup Seed Meter 7-4
Frame Mounted Coulter 7-12
Interplant® Push Row Unit Clutch Sprocket 7-18
Interplant® Push Row Unit Lockups 7-19
Planting Depth 7-1
Pneumatic Down Pressure 7-10
Quick Adjustable Down Force Springs Option 7-8
Residue Wheels (For Use With Frame Mounted Coulter) 7-13
Row Unit Extension Brackets 7-7
Row Unit Mounted Disc Furrower 7-13
Row Unit Mounted No Till Coulter 7-16
Row Unit Mounted Residue Wheel 7-14
Seed Hopper 7-7
Seed Meter Drive Release 7-7
Spring Tooth Incorporator 7-18
“V” Closing Wheel Adjustment (Rubber And Cast Iron) 7-1

LUBRICATION

Air Clutches 8-1
Bushings 8-3
Center Post 8-5
Drive Chains 8-2
Grease Fittings 8-6
Interplant® Push Row Unit Lockups 8-4
Liquid Fertilizer Piston Pump Crankcase Oil Level 8-6
Lubrication Symbols 8-1
Sealed Bearings 8-1
U-Joint Slides 8-5
Wheel Bearings 8-5

MAINTENANCE

15" Seed Opener Disc Blade/Bearing Assembly 9-11
Airline Schematic 9-42
Brush-Type Seed Meter Maintenance 9-6
Chain Tension Adjustment 9-2
Check Valve 9-21
Coulter Mounted Residue Wheels 9-15
Drag Closing Attachment 9-9

TABLE OF CONTENTS

MAINTENANCE (Continued)
Electrical Control Console Schematic 9-33
Electrical Wiring Diagram For Light Package.....9-32
Electrical Wiring Harness Schematic (On Tractor).....9-34
Electrical Wiring Harness Schematic (On Planter) 9-35
Finger Pickup Seed Meter Cleaning 9-4
Finger Pickup Seed Meter Inspection/Adjustment.....9-3
Flow Control Valve Inspection.....9-18
Frame Mounted Coulter 9-12
Gauge Wheel Adjustment.....9-9
Gauge Wheel Arm Bushing And/Or Seal Replacement 9-10
Gauge Wheel Arm Pivot Spindle Replacement 9-10
Hydraulic System Schematic 9-38
Mounting Bolts And Hardware 9-1
Piston Pump Storage.....9-29
Preparation For Storage 9-31
Pressure Relief Valve Inspection 9-18
Residue Wheels (For Use With Frame Mounted Coulter).....9-13
Row Marker Bearing Lubrication Or Replacement 9-24
Row Marker Transport Stand Adjustment 9-24
Row Unit Mounted Disc Furrower.....9-13
Row Unit Mounted No Till Coulter.....9-15
Row Unit Mounted Residue Wheel.....9-14
Seed Tube Guard/Inner Scraper 9-12
Solenoid Valve Inspection.....9-17
Spring Tooth Incorporator 9-16
Tire Pressure 9-2
Torque Values Chart 9-1
Troubleshooting
Brush-Type Seed Meter Troubleshooting.....9-8
Closing Wheel Troubleshooting 9-9
Finger Pickup Seed Meter Troubleshooting.....9-5
Lift Circuit Troubleshooting 9-18
Piston Pump Troubleshooting 9-30
Rotation Cylinder Circuit Troubleshooting.....9-21
Row Marker Operation Troubleshooting 9-23
Solenoid Valve Troubleshooting.....9-17
Tongue Cylinder Circuit Troubleshooting 9-20
Wing Lock Cylinder Circuit Troubleshooting 9-22
Wear Pad Replacement And Adjustment 9-26
Wheel Bearing Lubrication Or Replacement 9-25

PARTS LIST INDEX P1

PARTS SECTION NUMERICAL INDEX P119

TABLE OF CONTENTS

TO THE OWNER

KINZE Manufacturing, Inc. would like to thank you for your patronage. We appreciate your confidence in KINZE® farm machinery. Your KINZE® planter has been carefully designed to provide dependable operation in return for your investment.

This manual has been prepared to aid you in the operation and maintenance of the planter. It should be considered a permanent part of the machine and remain with the machine when you sell it.

It is the responsibility of the user to read and understand the Operator & Parts Manual in regards to safety, operation, lubrication and maintenance before operation of this equipment. It is the user's responsibility to inspect and service the machine routinely as directed in the Operator & Parts Manual. We have attempted to cover all areas of safety, operation, lubrication and maintenance; however, there may be times when special care must be taken to fit your conditions.

Throughout this manual the symbol ⚠ and/or the words **NOTE, IMPORTANT, CAUTION, WARNING** or **DANGER** are used to call your attention to important information. The definition of each of these terms follows:

NOTE: Indicates a special point of information or addresses a machine adjustment.

IMPORTANT: Indicates information which, if not heeded, could result in damage to the machine.

⚠ **CAUTION: Indicates a potentially hazardous situation which, if not avoided, may result in minor or moderate personal injury.**

⚠ **WARNING: Indicates a potentially hazardous situation which, if not avoided, could result in death or serious personal injury.**

⚠ **DANGER: Indicates an imminently hazardous situation which, if not avoided, will result in death or serious personal injury.**

⚠ **WARNING: Some photos in this manual may show safety covers, shields or lockup devices removed for visual clarity. NEVER OPERATE the machine without all safety covers, shields and lockups in place.**

NOTE: Some photos in this manual may have been taken of prototype machines. Production machines may vary in appearance.

NOTE: Some photos and illustrations in this manual show optional attachments installed. Contact your KINZE® Dealer for purchase of optional attachments.

WARRANTY

The KINZE® Limited Warranty for your new machine is stated on the back of the retail purchaser's copy of the Warranty And Delivery Report form. Additional copies of the Limited Warranty can be obtained through your KINZE® Dealer.

Warranty, within the warranty period, is provided as part of KINZE's support program for registered KINZE® products which have been operated and maintained as described in this manual. Evidence of equipment abuse or modification beyond original factory specifications will void the warranty. Normal maintenance, service and repair is not covered by KINZE® warranty.

To register your KINZE® product for warranty, a Warranty And Delivery Report form must be completed by the KINZE® Dealer and signed by the retail purchaser, with copies to the Dealer, to the retail purchaser and to KINZE Manufacturing, Inc. Registration must be completed and sent to KINZE Manufacturing, Inc. within 30 days of delivery of the KINZE® product to the retail purchaser. KINZE Manufacturing, Inc. reserves the right to refuse warranty on serial numbered products which have not been properly registered.

If service or replacement of failed parts which are covered by the Limited Warranty are required, it is the user's responsibility to deliver the machine along with the retail purchaser's copy of the Warranty And Delivery Report to the KINZE® Dealer for service. KINZE® warranty does not include cost of travel time, mileage, hauling or labor. Any prior arrangement made between the Dealer and the retail purchaser in which the Dealer agrees to absorb all or part of this expense should be considered a courtesy to the retail purchaser.

KINZE® warranty does not include cost of travel time, mileage, hauling or labor.

INTRODUCTION

The Model 3600V Twin-Line® Planter is available in various configurations and row spacings. Optional Interplant® row spacing is obtainable with the addition of push row units.

The Model 3600V Twin-Line® Planter permits installation of liquid fertilizer application equipment and various row unit attachments.

GENERAL INFORMATION

The information used in this manual was current at the time of printing. However, due to KINZE's continual attempts to improve its product, production changes may cause your machine to appear slightly different in detail. KINZE Manufacturing, Inc. reserves the right to change specifications or design without notice and without incurring obligation to install the same on machines previously manufactured.

Right hand (R.H.) and left hand (L.H.), as used throughout this manual, are determined by facing in the direction the machine will travel when in use, unless otherwise stated.

D05140836

SPECIFICATIONS

BASE MACHINE TYPE - Pull Type (Hydraulically Rotates Endwise To Transport)

SEED METER TYPE - Mechanical Seed Metering System

PLANTING UNIT TYPES - Push And Pull Row Units

ROW SPACING	**Standard**	**Interplant® Package**
	12 Row Narrow - 30" Rows	23 - 15" Rows Or 24 - 15" Rows
	16 Row Narrow - 30" Rows	31 - 15" Rows Or 32 - 15" Rows

DRIVE SYSTEM - KINZE Vision® Variable-Rate Hydraulic SIngle Motor Drive System
- 7.50" x 20" 8 Ply Rib Implement Wing Tire - Two On 12 Row; Four On 16 Row
- No. 40 Roller Chain And Spring-Loaded Idlers
- Single Row Air Clutches Standard On 12 And 16 Row Sizes
- ⅞" Hex Drill And Drive Shafts And End Mounted Seed Transmissions

TRANSPORT TIRES - Equipped With Four 255 - 70R 22.5" Radial Load Range H Tubeless Rib Implement Tires
- Adjustable Height Wheels For Ridge Planting

TYPE LIFT - Master/Slave Hydraulics
- 12 Row - 2 Center Lift (Master) Cylinders, 1 Cylinder Per Wing Wheel Module (2 Slave)
- 16 Row - 2 Center Lift (Master) Cylinders, 1 Cylinder Per Wing Wheel Module (2 Modules Per Wing - 4 Slave Cylinders Total)

ROW MARKERS - Independently Controlled. Two-Fold, Low Profile With Depth Band On Marker Disc Blade

MACHINE OPTIONS
- Electronic Seed Monitors
  - KINZE Vision® Display
- Auxiliary Work Lights Package
- Interplant® Package
- Even-Row Push Row Unit Package
- Liquid Fertilizer Package
- Rear Trailer Hitch
- Piston Pump Mount And Drive Package
- Rock Guard Package For Transport Wheel Arms
- 2-Point Hitch Option

ROW UNIT OPTIONS/ATTACHMENTS
- Finger Pickup Or Brush-Type Seed Meters
- Brush-Type Seed Meter Discs
- Down Pressure Options
  - Quick Adjustable Down Force Springs
  - Pneumatic Down Pressure Package
- Closing Wheel Options
  - Rubber “V” Closing Wheels
  - Cast Iron “V” Closing Wheels
  - Covering Discs/Single Press Wheel
  - Drag Closing Attachment
- Granular Chemical Application
- Spring Tooth Incorporator
- Row Unit Extension Brackets
- Hopper Panel Extension Package
- Row Unit Mounted No Till Coulter
- Coulter Mounted Residue Wheels
- Row Unit Mounted Disc Furrowers
- Row Unit Mounted Bed Leveler
- Row Unit Mounted Residue Wheel
- Frame Mounted Coulter
- Residue Wheels For Frame Mounted Coulter

SPECIFICATIONS

DIMENSIONS - OPERATING

PLANTER SIZE	12 Row 30"	16 Row 30"
WIDTH	31' 2"	41' 2"
LENGTH - “Y” Hitch	21' 0"	24' 0"

DIMENSIONS - TRANSPORT

PLANTER SIZE	12 Row 30"	16 Row 30"
WIDTH Std., fertilizer or push row units	11' 2"	11' 2"
WIDTH Push row unit with no till coulters Push row unit with no till coulters and coulter mounted residue wheels	11' 4" 11' 8"	11' 4" 11' 8"
LENGTH	36' 10"	46' 10"
HEIGHT	10' 8"	11' 0"

NOTE: L.H. transport wheel and axle stub assembly is removable for truck transport machines at 8' 6" for 12 Row N and 16 Row N.

PLANTER SIZE	12 Row 30"	16 Row 30"
*WEIGHT	12,421 lbs.	15,137 lbs.

* Base Machine weights include planter frame, row markers, drive components, tires and wheels, hydraulic cylinders and hoses, 12VDC control console, KINZE® pull row units (closing wheel arms less closing wheels), seed hopper and lid, dual quick-adjustable down force springs, transport safety chain and point row clutches (12 row and larger sizes).

SAFETY PRECAUTIONS ⚠

Safe and careful operation of the tractor and planter at all times will contribute significantly to the prevention of accidents.

Since a large portion of farm accidents occur as a result of fatigue or carelessness, safety practices should be of utmost concern. Read and understand the instructions provided in this manual and on the warning signs. Review these instructions frequently! Listed below are other safety suggestions that should become common practice.

⚠ **Never allow the planter to be operated by anyone who is unfamiliar with the operation of all functions of the unit. All operators should read and thoroughly understand the instructions given in this manual prior to moving the unit.**

⚠ **Never permit any persons other than the operator to ride on the tractor.**

⚠ **Never ride on the planter or allow others to do so.**

⚠ **Always make sure there are no persons near the planter when row markers are in operation or when rotating the planter.**

⚠ **Always keep hands, feet and clothing away from moving parts. Do not wear loose-fitting clothing which may catch in moving parts.**

⚠ **Always wear protective clothing, substantial shoes and suitable hearing and eye sight protectors applicable for the situation.**

⚠ **Do not allow anyone to stand between the tongue or hitch and the towing vehicle when backing up to the planter.**

⚠ **Be aware of bystanders, particularly children! Always look around to make sure it is safe to start the engine of the towing vehicle or move the planter. This is particularly important with higher noise levels and quiet cabs, as you may not hear people shouting.**

⚠ **Use a tractor equipped with a roll-over-protective-system and fasten your seat belt prior to starting the engine.**

⚠ **Before operating the planter for the first time and periodically thereafter, check to be sure the lug nuts on the transport wheels are torqued properly. This is especially important if the planter is to be transported for a long distance.**

⚠ **Never work under the planter while in raised position without using safety lockup devices.**

⚠ **Install safety lockup devices on row markers prior to transporting the planter or working around the unit.**

D060299127a

⚠ **Watch for obstructions such as wires, tree limbs, etc., when folding row markers.**

⚠ **To avoid serious injury or death, care must be taken when operating row markers around overhead power lines.**

⚠ **On machines where the outer transport wheel on the left side of the planter is bolt-on to allow legal width truck shipment, always install outer transport wheel assembly prior to unloading. DO NOT REMOVE THIS ASSEMBLY AFTER PLANTER IS ASSEMBLED FOR USE. DO NOT fold planter or tow planter while the outer transport wheel is removed. Tipping may occur because of narrow wheel base.**

⚠ **Do not work on planter drive system without first shutting off the tractor or disconnecting the hydraulic lines. The hydraulic drive could start at anytime.**

Always install tongue safety pin, manual safety lockup device and transport latch locking pin before transporting planter.

D05050849

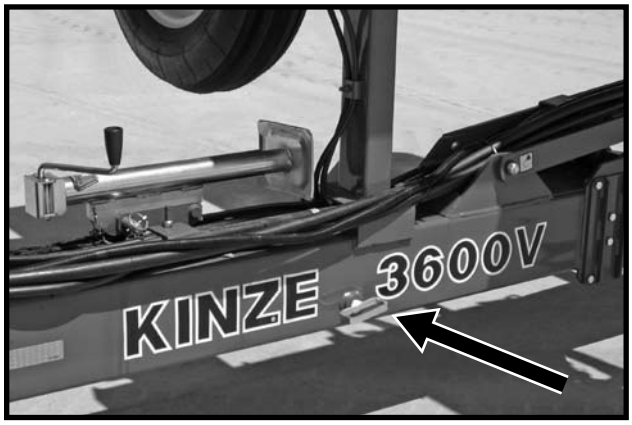

Tongue Safety Pin

D05050842

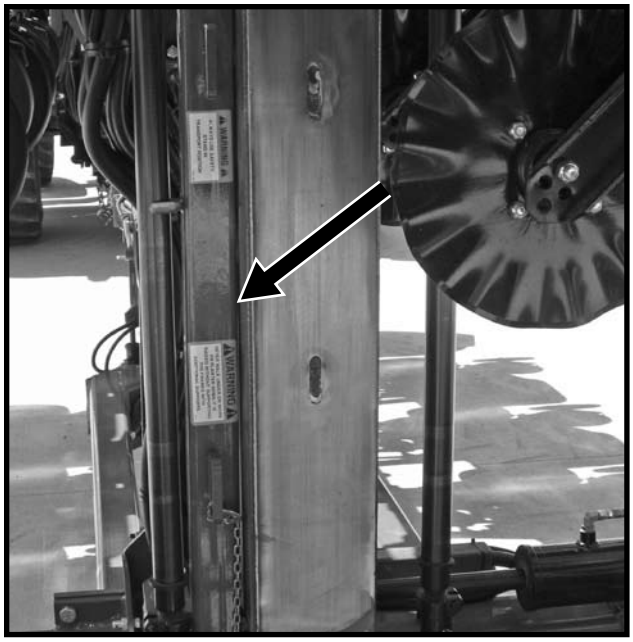

Manual Safety Lockup device

D05050840

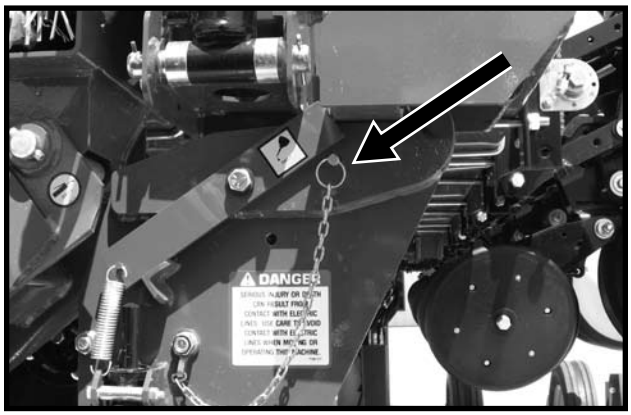

Transport Latch Locking Pin

This machine has been designed and built with your safety in mind. Do not make any alterations or changes to this machine. Any alteration to the design or construction may create safety hazards.

Always follow federal, state/provincial and local regulations when towing farm equipment on a public highway. Only a safety chain (not an elastic or nylon/plastic tow strap) should be used to retain the connection between the towing and towed machines in the event of separation of the primary attaching system.

Check to be sure all safety/warning lights are working properly before transporting the machine on public roads.

Avoid transporting planter with hoppers loaded whenever possible. When it is necessary to transport the planter with the hoppers loaded, the added weight should be distributed evenly on the planter frame before rotating the planter.

Limit towing speed to 15 MPH. Tow only with farm tractor of a minimum 90 HP.

Always make sure safety/warning lights, reflective decals and SMV sign are in place and visible prior to transporting the machine on public roads. In this regard, check federal, state/provincial and local regulations.

Allow for unit length when making turns.

Always drive at a safe speed relative to local conditions and ensure your speed is low enough for an emergency stop to be safe and secure. Keep speed to a minimum.

Reduce speed prior to turns to avoid the risk of overturning.

Always keep the tractor in gear to provide engine braking when going downhill. Do not coast.

Avoid sudden uphill turns on steep slopes.

Be a safe and courteous driver. Always yield to oncoming traffic in all situations, including narrow bridges, intersections, etc.

Rim and tire servicing can be dangerous. Explosive separation of a tire and rim parts can cause serious injury or death.

Agricultural chemicals used with this unit can be dangerous. Improper selection or use can seriously injure persons, animals, plants, soil and other property. BE SAFE: Select the right chemical for the job. Handle it with care. Follow the instructions on the container label and of the equipment manufacturer.

Store the planter in an area away from human activity. DO NOT permit children to play on or around the stored unit.

Make sure the parked machine is on a hard, level surface. Wheel chocks may be needed to prevent unit from rolling.

Good maintenance is your responsibility. Poor maintenance is an invitation to trouble.

Pressurized hydraulic fluid can penetrate body tissue and result in serious infection, injury, or death. Before applying pressure to the hydraulic system, make sure all connections are tight and that hoses and fittings have not been damaged. Leaks can be invisible. Keep away from suspected leaks. Relieve pressure in the hydraulic system before searching for leaks, disconnecting hoses, or performing any other work on the system. Fluid injected under the skin must be IMMEDIATELY removed by a surgeon familiar with this type of injury.

SAFETY WARNING SIGNS ⚠

The “WARNING” signs illustrated on these pages are placed on the machine to warn of hazards. The warnings found on these signs are for your personal safety and the safety of those around you. OBSERVE THESE WARNINGS!

- **Keep these signs clean so they can be readily observed. Wash with soap and water or cleaning solution as required.**
- **Replace “WARNING” signs should they become damaged, painted over or if they are missing.**
- **Check reflective decals and SMV sign periodically. Replace if they show loss of any of their reflective properties.**
- **When replacing decals, clean the machine surface thoroughly using soap and water or cleaning solution to remove all dirt and grease.**

NOTE: Style and locations of SMV sign, reflective decals and safety/warning lights conform to ANSI/ASAE S279.13 DEC2005 and ANSI/ASAE S276.6 JAN2005.

D05050803

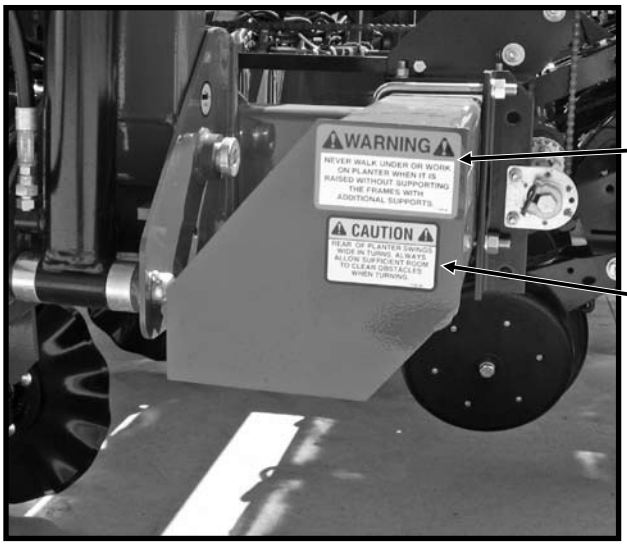

Part No. G7100-68 (Qty. 1)

Part No. G7100-63 (Qty. 1)

D060299216

Part No. G7100-117 (Qty. 1)

Part No. G7100-02 (Qty. 1)

SAFETY WARNING SIGNS ⚠

D060299127a

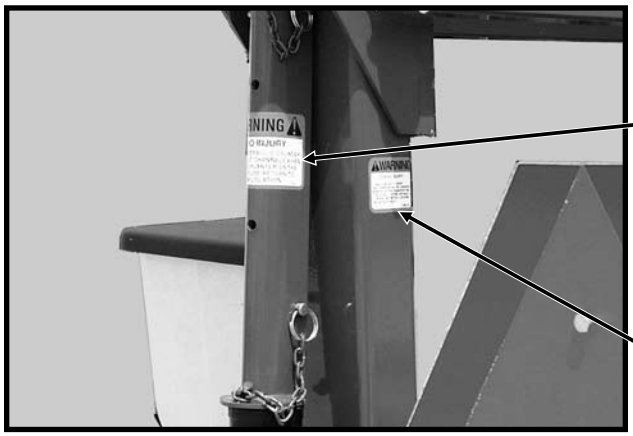

⚠ WARNING ⚠

TO AVOID INJURY

ALWAYS USE HYDRAULIC CYLINDER SAFETY LOCKOUT CHANNELS WHEN TRANSPORTING PLANTER ON THE ROAD. AFTER USE RETURN TO STORAGE LOCATION.

7100-83

Part No. G7100-83 (Qty. 2 - One Per Row Marker)

⚠ WARNING

TO AVOID INJURY --

STAND CLEAR--KEEP OTHERS AWAY WHEN RAISING OR LOWERING MARKERS. BEFORE TRANSPORTING PLANTER FULLY EXTEND HYDRAULIC CYLINDERS AND INSTALL LOCKING PINS WHERE PROVIDED.

7100-42

Part No. G7100-42 (Qty. 4 - Two Per Row Marker)

D05140835

⚠ CAUTION ⚠

AVOID UNEVEN LOADING OF HOPPERS, ESPECIALLY DURING TRANSPORT

7100-75

Part No. G7100-75
(Qty. 4 - Front And Rear/Left And Right)

D092702101a

⚠ WARNING

USE SAFETY CHAINS PROVIDED. TOW ONLY WITH FARM TRACTOR.

7100-302

Part No. G7100-302 (Qty. 1)

SAFETY WARNING SIGNS

D05050808

WARNING

THIS MACHINE HAS BEEN DESIGNED AND BUILT WITH YOUR SAFETY IN MIND. DO NOT MAKE ANY ALTERATIONS OR CHANGES TO THIS MACHINE. ANY ALTERATION TO THE DESIGN OR CONSTRUCTION MAY CREATE SAFETY HAZARDS.

7100-90

Part No. G7100-90 (Qty. 1)

WARNING

1. Read and understand the Operator's Manual.
2. Stop the tractor engine before leaving the operator's platform.
3. Keep riders off the machine.
4. Make certain everyone is clear of the machine before starting the tractor engine and operating.
5. Keep all shields in place.
6. Never lubricate, adjust, unclog or service the machine with tractor engine running.
7. Wait for all movement to stop before servicing.
8. Keep hands, feet and clothing away from moving parts.
9. Use flashing warning lights when operating on highways except when prohibited by law.

7100-46

Part No. G7100-46 (Qty. 1)

D05140840

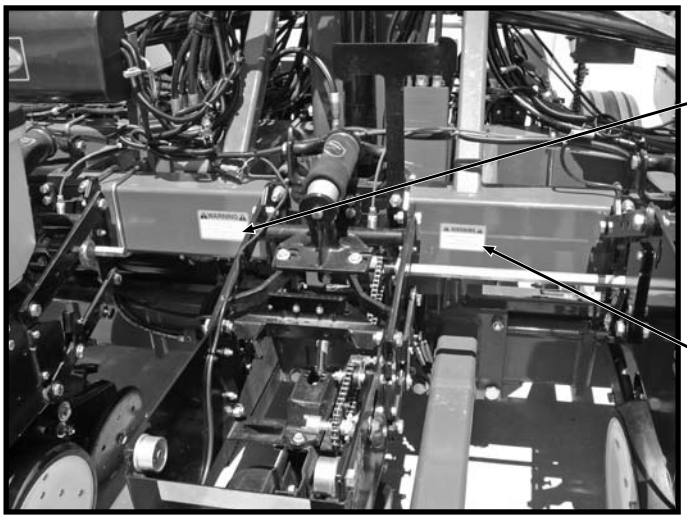

WARNING

NEVER WALK UNDER OR WORK ON PLANTER WHEN IT IS RAISED WITHOUT SUPPORTING THE FRAMES WITH ADDITIONAL SUPPORTS.

7100-68

Part No. G7100-68 (Qty. 2 - Front And Back)

WARNING

ALWAYS USE SAFETY STAND IN TRANSPORT POSITION

7100-200

Part No. G7100-200 (Qty. 2 - Front And Back)

SAFETY WARNING SIGNS

D05050841

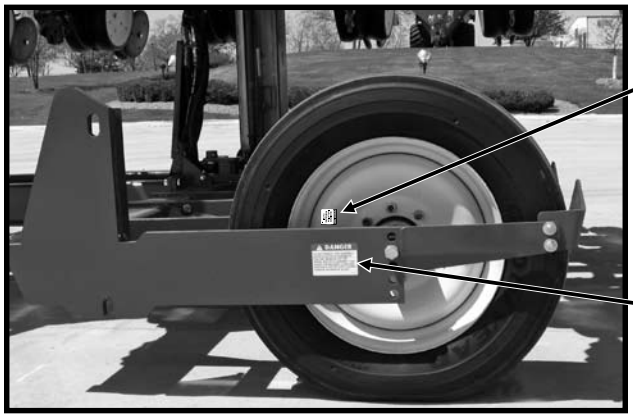

WARNING

MAXIMUM INFLATION PRESSURE 75 PSI

7100-219

Part No. G7100-219 (Qty. 4 - One On Each Transport Wheel)

DANGER

DO NOT REMOVE THIS ASSEMBLY AFTER PLANTER IS ASSEMBLED FOR USE. REMOVAL OF THIS WHEEL AND AXLE ASSEMBLY CAN CAUSE THE MACHINE TO BECOME UNSTABLE AND TIP OVER CAUSING DAMAGE OR SERIOUS INJURY.

7100-215

Part No. G7100-215 (Qty. 1 - Located On Rear Side Of Stub Axle)

D0205001102

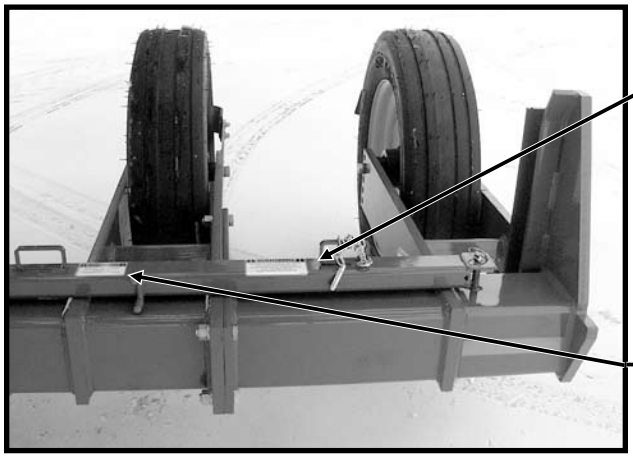

WARNING

NEVER WALK UNDER OR WORK ON PLANTER WHEN IT IS RAISED WITHOUT SUPPORTING THE FRAMES WITH ADDITIONAL SUPPORTS.

7100-68

Part No. G7100-68 (Qty. 1)

WARNING

ALWAYS USE SAFETY STAND IN TRANSPORT POSITION

7100-200

Part No. G7100-200 (Qty. 1)

SAFETY WARNING SIGNS ⚠

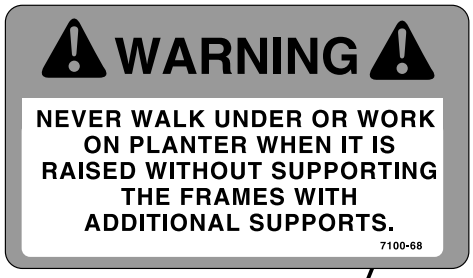

Part No. G7100-68 (Qty. 1)

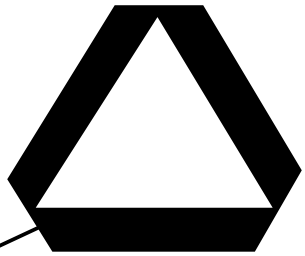

Part No. GD2199 (Qty. 1)

D05140857

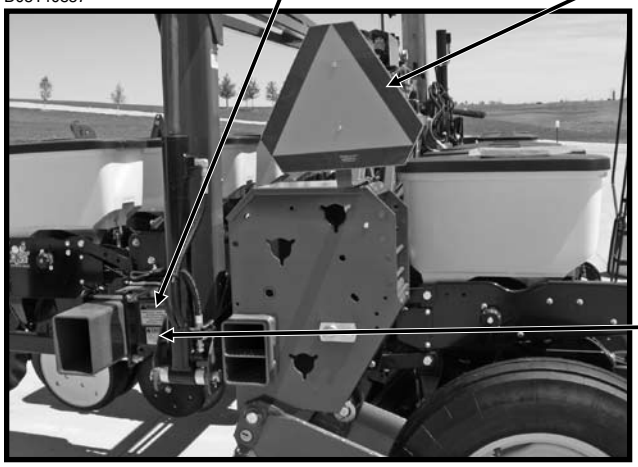

Part No. G7100-63 (Qty. 1)

12 Row 30" Shown

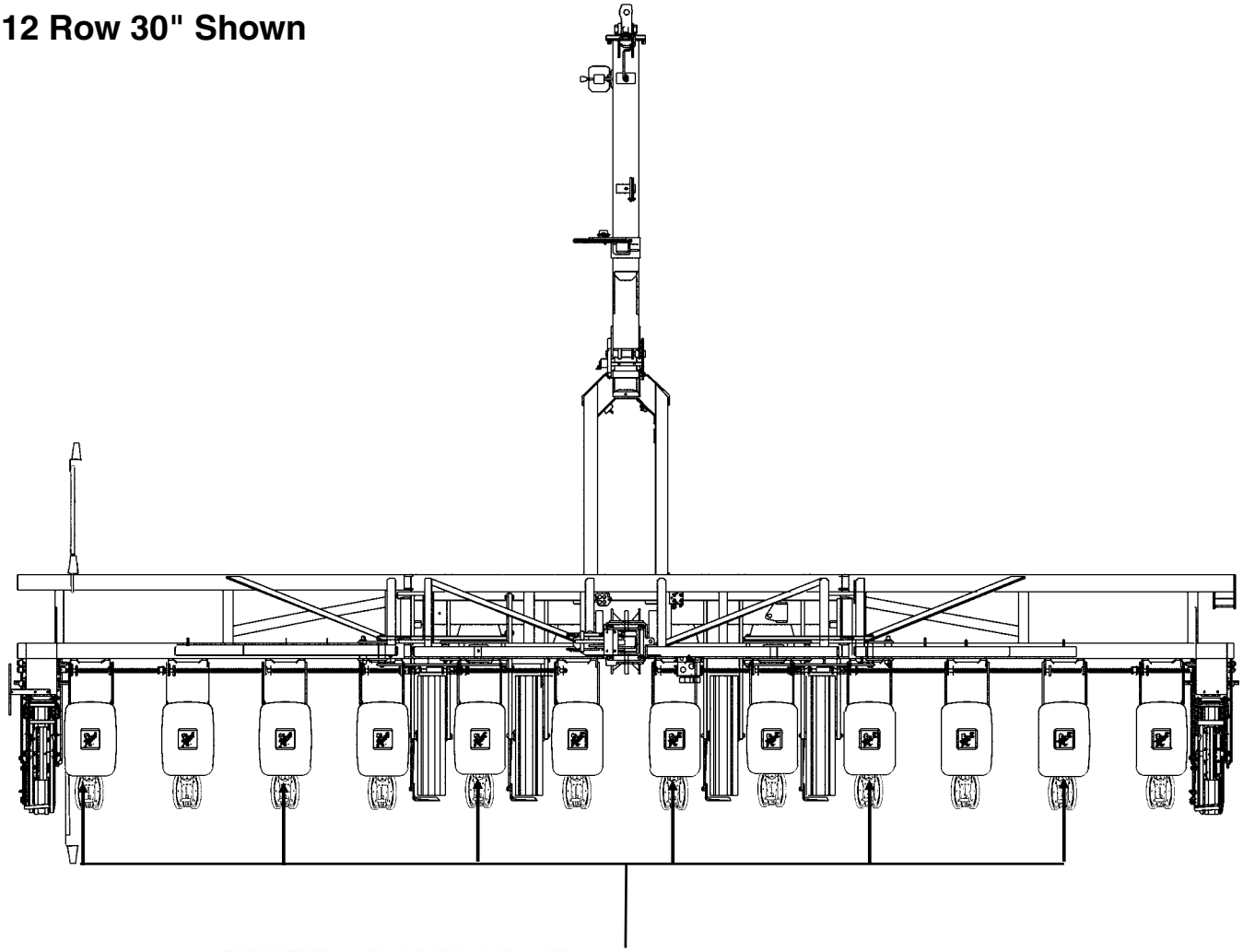

Part No. G7100-262 Amber Reflective Decal (Located On The Hopper Support On Every Other Row Unit Beginning On The 1st Row Unit On The L.H. End Of The Planter - Side-Facing In Transport Position) **(Standard)**

D060800114

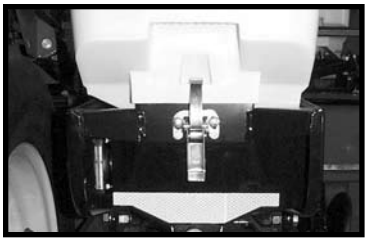

Part No. G7100-259 Amber Reflective Decal (Located On The Granular Chemical Hopper Panel Extension On Every Other Row Unit Beginning On The 1st Row Unit On The L.H. End Of The Planter - Side-Facing In Transport Position)

D062300102

NOTE: 6 Decals Used On 12 Row; 8 Used On 16 Row Sizes

SAFETY WARNING SIGNS ⚠

(PLTR132f/TWL173a)

12 Row 30" Shown

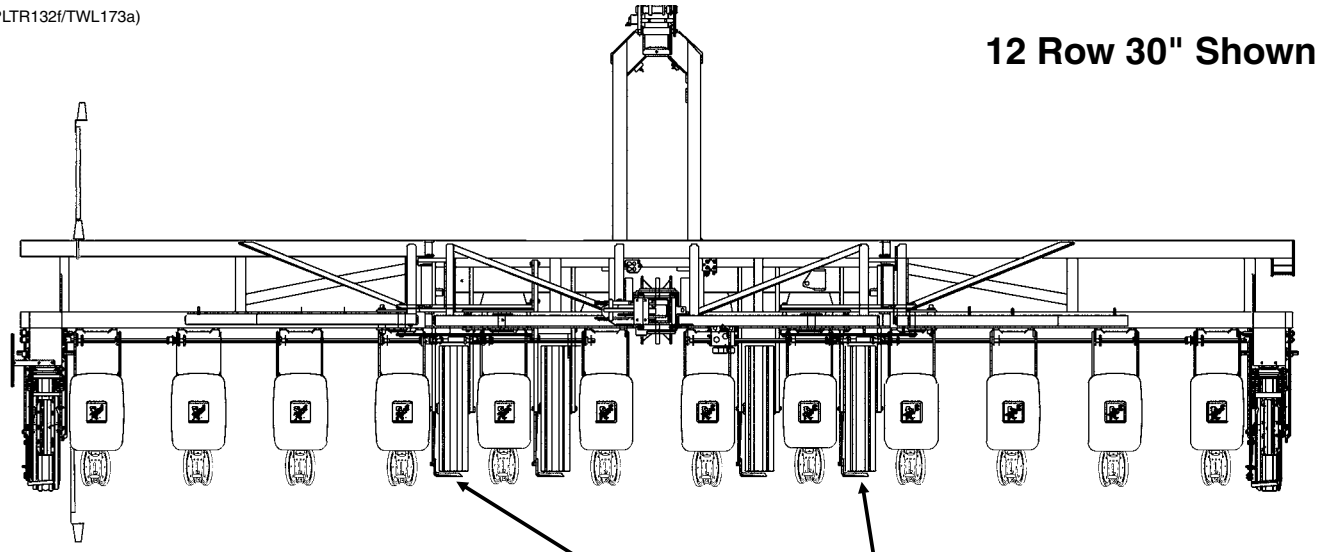

D060800115a

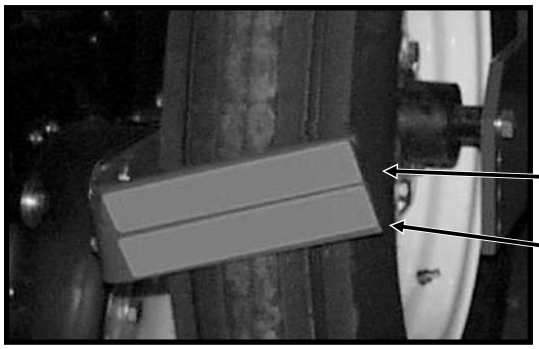

Part No. G7100-258 Red Reflective Decal
(Qty. 1 Per Outer Scraper - Located On Top)

Part No. G7100-260 Orange Reflective Decal
(Qty. 1 Per Outer Scraper - Located On Bottom)

Part No. G7100-259 Amber Reflective Decal (Located On The Front Side Of The Front Toolbar - Side-Facing In Transport Position)

NOTE: 7 Decals Used On 12 Row 30"; 9 Used On 16 Row 30" Sizes (12 Row 30" Shown)

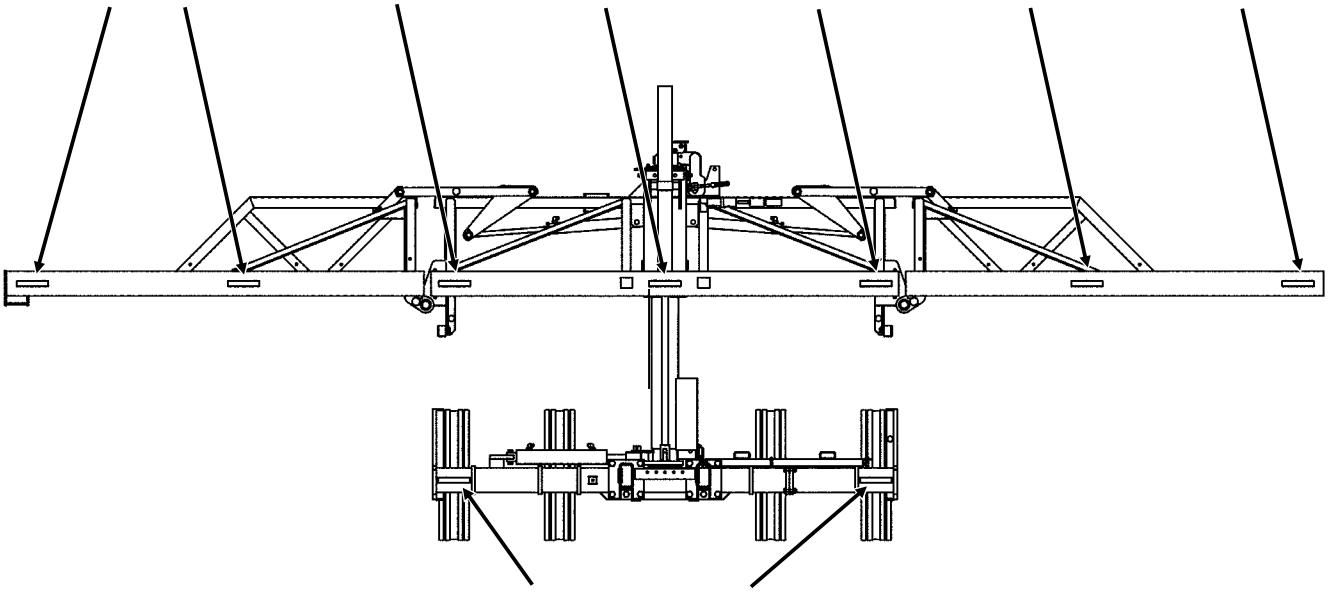

Part No. G7100-259 Amber Reflective Decal (Qty. 2 - Forward-Facing)

(TWL174b/RU120e/RU130d/PLTR132f)

12 Row 30" Shown

Part No. G7100-258 Red Reflective Decal (Qty. 1 - Located On The Light Bracket On the L.H. Side Of The Planter - Rear-Facing In Transport Position)

Part No. G7100-260 Orange Reflective Decal (Qty. 1 - Located On The Light Bracket On the L.H. Side Of The Planter - Rear-Facing In Transport Position)

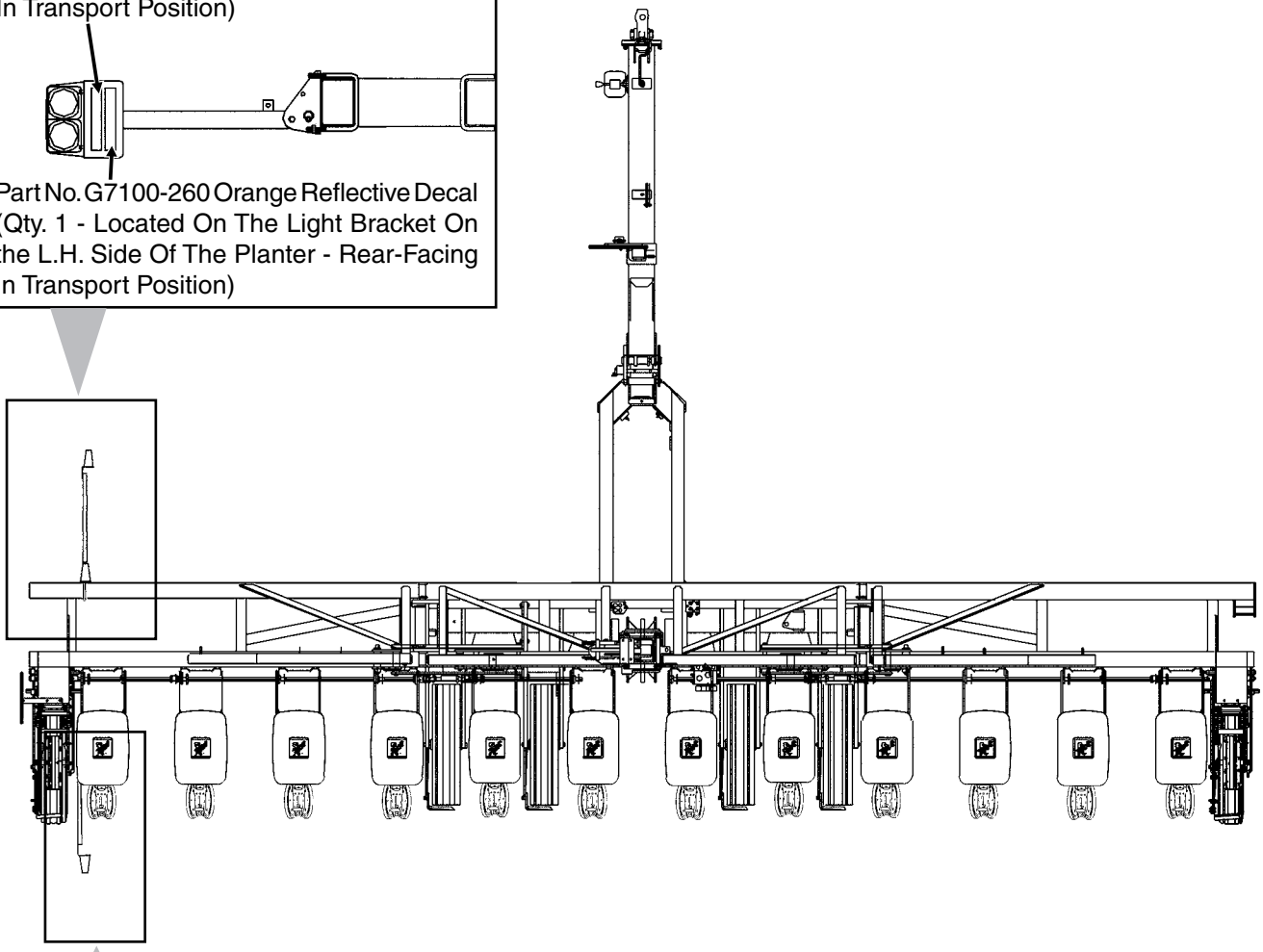

Part No. G7100-258 Red Reflective Decal (Qty. 1 - Located On The Outer Row Unit On the L.H. Side Of The Planter - Rear-Facing In Transport Position)

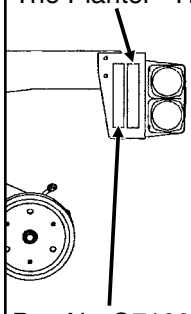

Part No. G7100-260 Orange Reflective Decal (Qty. 1 - Located On The Outer Row Unit On the L.H. Side Of The Planter - Rear-Facing In Transport Position)

(TWL319)

12 Row 30" And 16 Row 30" - "Y" Hitches

Part No. G7100-259 Amber Reflective Decal (Qty. 2 - 1 Located On Each Side Of Hitch)

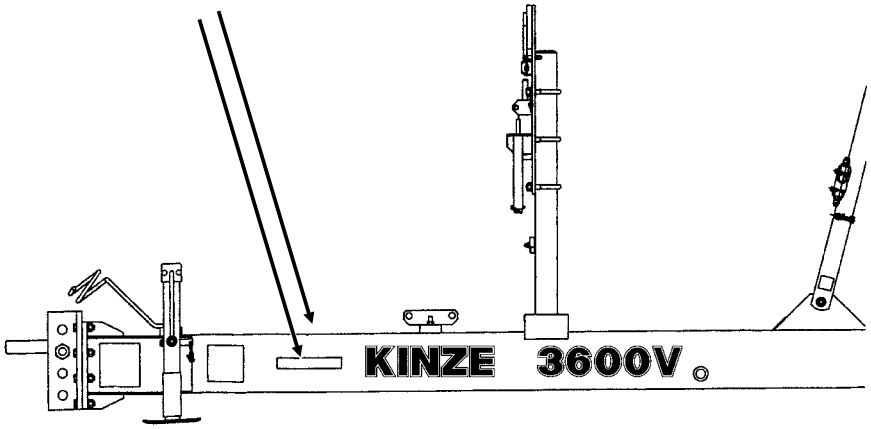

SAFETY WARNING SIGNS

(PLTR159/TWL122m/PLTR133f)

Part No. G7100-258
Red Reflective Decal (Qty. 1)

Part No. G7100-260
Orange Reflective Decal (Qty. 1)

(Located On The L.H. End Of The Planter - Rear-Facing In Transport Position)

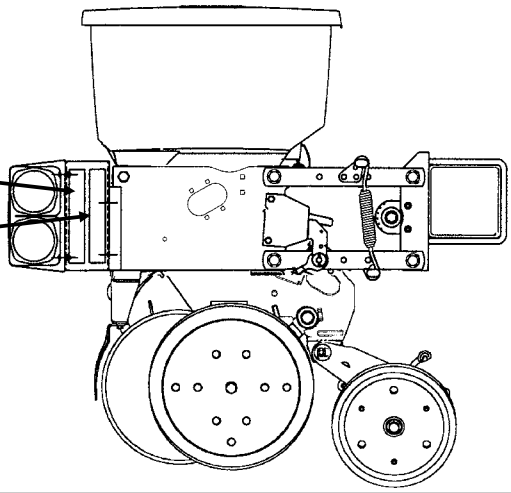

WITH INTERPLANT® PACKAGE OPTION

D020101103

Part No. G7100-259
Amber Reflective Decal
(Qty. 3 Used On 8 Row; 5 On 12 Row; 7 On 16 Row - Located On The Front Of Every Other Push Row Unit Beginning With The Center Row Unit And Every Other Row Unit To Both Ends - Side-Facing In Transport Position)

Part No. G7100-259
Amber Reflective Decal
(Qty. 1 - Located On The Front Of The Optional Even-Row Push Row Unit - Side-Facing In Transport Position)

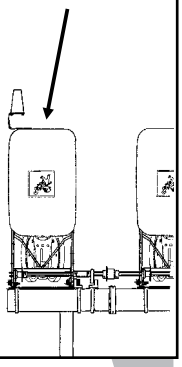

12 Row 30" Shown

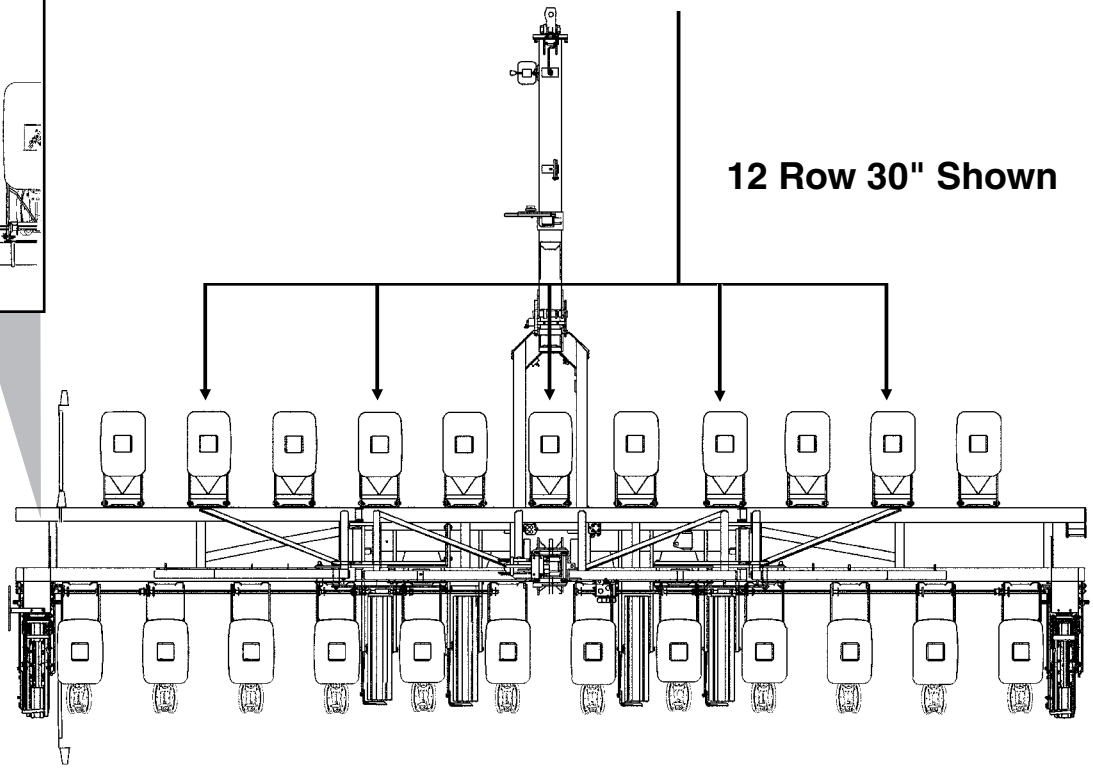

SAFETY WARNING SIGNS

D06039901

WARNING

AGRICULTURAL CHEMICALS CAN BE DANGEROUS. IMPROPER SELECTION OR USE CAN SERIOUSLY INJURE PERSONS, ANIMALS, PLANTS, SOIL OR OTHER PROPERTY. BE SAFE. SELECT THE RIGHT CHEMICAL FOR THE JOB. HANDLE WITH CARE. FOLLOW THE INSTRUCTIONS ON THE CONTAINER LABEL AND OF THE EQUIPMENT MANUFACTURER.

7100-115

Part No. G7100-115 (1 Per Row Unit - Located On Underside Of Each Optional Granular Chemical Hopper Lid)

D05140833

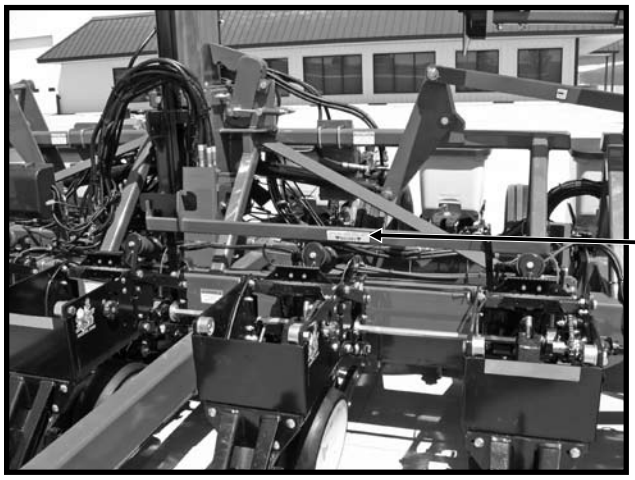

CAUTION

SET DOWN PRESSURE SPRINGS TO MINIMUM. LOWER PLANTER TO GROUND AND EMPTY SEED HOPPERS. REQUIRES 90 LB MIN TO LIFT . 7100-249

Part No. G7100-249 (Qty. 1 - Located On Interplant® Push Row Unit Lift Lever)

MACHINE OPERATION

The following information is general in nature and was written to aid the operator in preparation of the tractor and planter for use, and to provide general operating procedures. The operator's experience, familiarity with the machine and the following information should combine for efficient planter operation and good working habits.

IMPORTANT: Always raise the planter out of the ground when making sharp turns or backing up.

ROW MARKER SAFETY LOCKUP

Install safety lockup devices over marker cylinder rods when transporting the planter or working around the planter. When lockups are not in use, store in the storage position provided on the first stage row marker arm.

DANGER: To avoid serious injury or death, keep others away when raising or lowering row markers.

D08250007

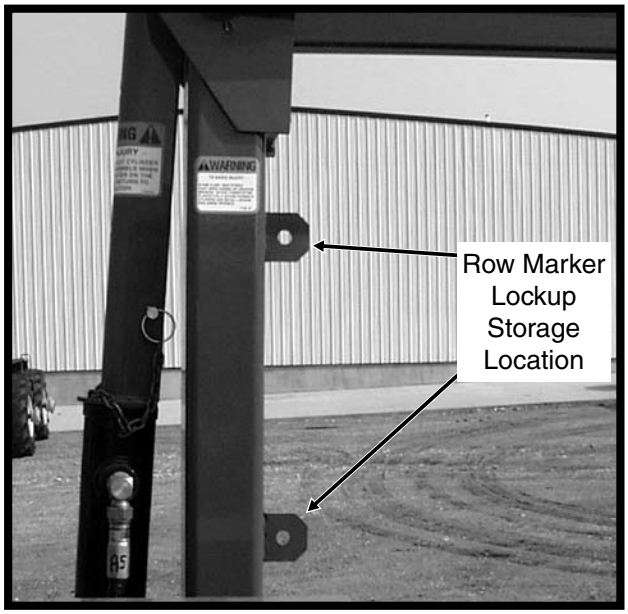

MANUAL SAFETY LOCKUP

Never allow anyone to work around or under the planter without first securing the manual safety lockup in the locked position. When transporting the planter use the manual safety lockup for added safety.

D05050842

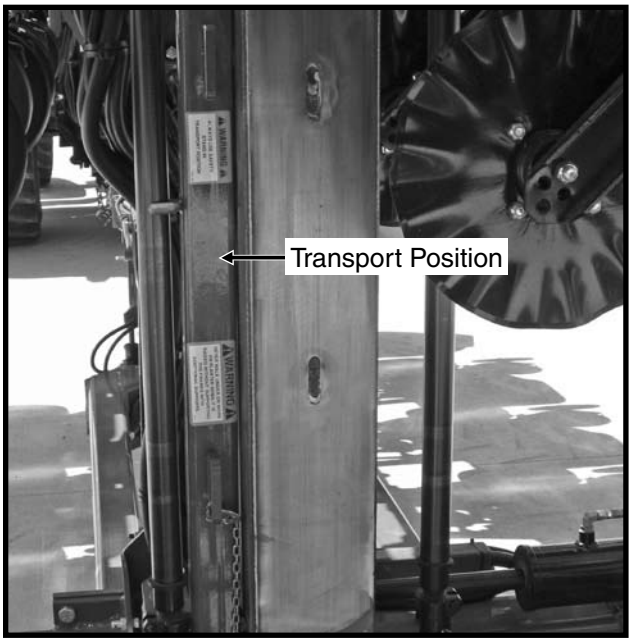

Manual Safety Lockup In Transport Position

D06189903

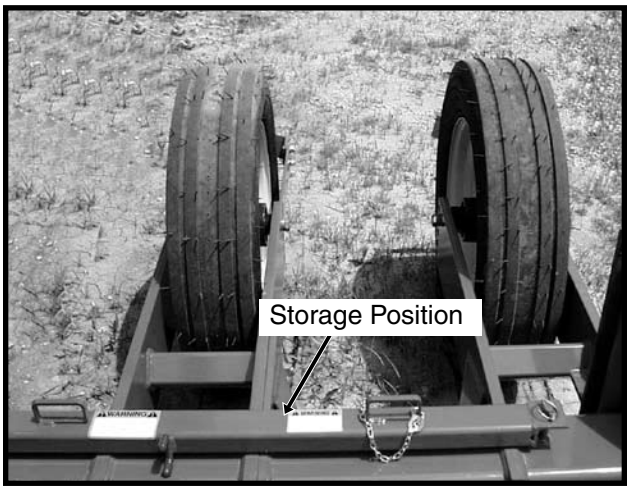

Manual Safety Lockup In Storage Position

For field operation remove the manual safety lockup and store on the L.H. side of the transport axle.

TONGUE SAFETY PIN

The tongue safety pin when installed will prevent the tongue cylinder from retracting should hydraulic failure occur or a sudden stop be made when transporting the planter. Never transport the planter without installing the tongue safety pin.

D05050849

Tongue Safety Pin Installed For Transport

D062501101

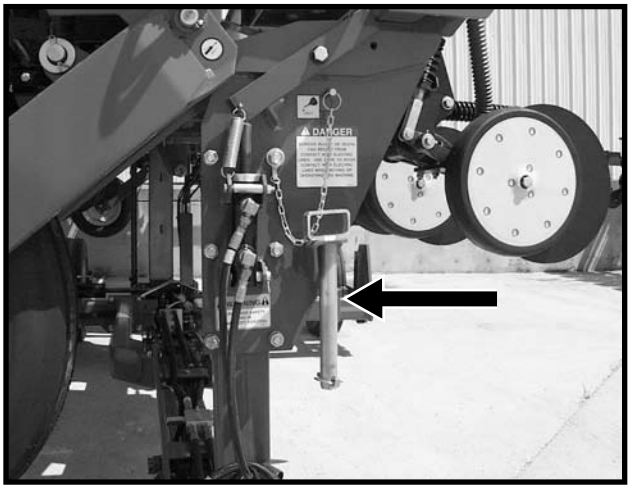

Tongue Safety Pin Stored For Field Operation

For field operation remove the tongue safety pin and store in the bracket provided on the transport latch post at the center of the planter.

TRANSPORT LATCH LOCKING PIN

The transport latch locking pin when installed will prevent the latch bar from disengaging and allowing the planter frame to swing away. Never transport the planter without installing the transport latch locking pin.

D060299106

Transport Latch Locking Pin Installed For Transport

D060299216

Transport Latch Locking Pin Stored For Field Operation

For field operation remove the transport latch locking pin and store in the location provided on the latch post.

INITIAL PREPARATION OF THE PLANTER

Lubricate the planter and row units per the lubrication information in this manual. Make sure all tires have been properly inflated. Check all drive chains for proper tension, alignment and lubrication.

DANGER: The outer transport wheel on the left side of the machine is shipped removed (not bolted on) to allow narrower width truck shipment. DO NOT REMOVE THIS ASSEMBLY AFTER PLANTER IS ASSEMBLED FOR USE. DO NOT fold planter or tow planter while the outer transport wheel is removed. Tipping may occur because of narrow wheel base.

TRACTOR REQUIREMENTS

Consult your dealer for information on horsepower requirements and tractor compatibility. Requirements will vary with planter options, tillage and terrain. Three dual remote hydraulic outlets (SCV) are required on all sizes. 3600V machine will require a minimum of 4.5 gallons per minute. A 12 volt DC electrical system is required on all sizes.

NOTE: Do not tee into hydraulic motor lines to run additional equipment.

TRACTOR PREPARATION AND HOOKUP

D101602106

NOTE: A 2-Point Hitch Option, which converts the planter from drawn to semi-mounted, is available for use with Category 3N or 3 three-point hitch designs. The safety chain is not applicable with the 2-point hitch.

1. Adjust tractor drawbar to 13-17 inches above the ground. Adjust the drawbar so the hitch pin hole is directly below the center line of the PTO shaft. Make sure the drawbar is in a stationary position.

2. Install control console on tractor in a convenient location within reach of the operator and close to the hydraulic controls. Mount control console securely and route power cord to the power source.

   The control console operates on 12 volt DC only. If two 12 volt batteries are connected in series, ALWAYS make power connection on the battery which is grounded to the tractor chassis.

   If two 6 volt batteries are connected in series, make sure the power connection provides 12 volt DC across the positive terminal on one battery and negative terminal of the second battery.

3. Back tractor to planter and connect with 1 ¼" - 1 ½" diameter hitch pin. If the tractor is not equipped with a hitch pin locking device, make sure hitch pin is secured with a locking pin or cotter pin.

4. The auxiliary attaching system (transport safety chain) provided with your planter should be used to ensure the connection is retained between the planter and tractor in the event of a hitch pin/drawbar failure. The safety chain is to be attached using an unused clevis mounting hole on the planter hitch. The attaching hardware should be torqued to 840 ft. lbs. Connect the hook end of the chain sercurely around a tractor frame member.

5. Connect hydraulic hoses to tractor ports in a sequence which is both familiar and comfortable to the operator.

The hydraulic hoses are color coded as follows:

Red AA - Lift Functions (Return)
Red BB - Lift Functions (Pressure)
Blue AA - Marker And Fold/Unfold Functions (Return)
Blue BB - Marker And Fold/Unfold Functions (Pressure)

The hydraulic motor operation hydraulic hoses are as follows:

⅜" Hose AA - Hydraulic Motor (Pressure)
½" Hose BB - Hydraulic Motor (Return)

DANGER: Before applying pressure to the hydraulic system, make sure all connections are tight and that hoses and fittings have not been damaged. Hydraulic fluid escaping under pressure can have sufficient force to penetrate skin, causing injury or infection.

IMPORTANT: Always wipe hose ends to remove any dirt before connecting couplers to tractor ports.

6. Connect cable on planter to control console cable on tractor. Connect ASAE Standards 7 terminal connector for safety/warning lights on planter to ASAE Standards receptacle on tractor. If your tractor is not equipped with an ASAE Standards receptacle, check with your tractor manufacturer for availability. Check to be sure safety/warning lights on planter are working in conjunction with warning lights on tractor.

7. Raise jack and remount horizontally on storage bracket.

8. Lower planter to the planting position and check to be sure the hitch is level. If hitch slopes up or down, disconnect planter and adjust hitch clevis up or down as necessary.

LEVELING THE PLANTER

For proper performance of the planter and row units, it is important that the planter frame and row unit parallel arms operate approximately level. The toolbar should operate at a 20"-22" height, measured from the planting surface to the bottom of the toolbar.

D101602106

Four holes in the hitch bracket allow the clevis to be raised or lowered. In addition, the clevis may be turned over for a finer adjustment between mounting holes. When installing the clevis mounting bolt, make sure the lock nut is tightened to proper torque setting. (840 ft./lbs.)

D05050819

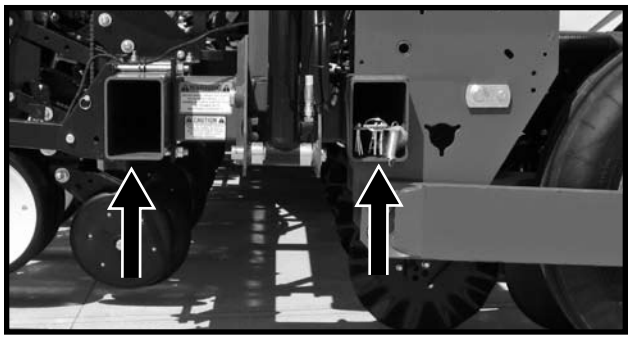

With the planter lowered to correct operating height, check to be sure the frame is level fore and aft. Recheck once planter is in the field.

It is important for the planter to operate level laterally. Tire pressure must be maintained at pressures specified. See “Tire Pressure”.

Field and actual planting conditions will dictate which of the transport wheel settings to use to ensure row unit parallel arms are approximately parallel with the planting surface. It may also be necessary to lower the ground drive wheels to ensure level lateral toolbar operation if the transport wheels are set in one of the two lower sets of holes.

NOTE: To allow adequate drive force after lowering the ground drive wheels and springs, it may be necessary to lower the contact drive wheel arms to the lower sets of holes in the wheel modules and lower the down pressure springs to the lower mounting rods on the wheel modules.

(RU113h)

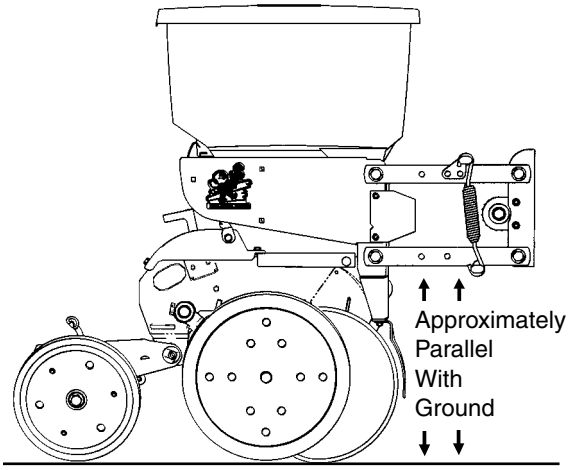

(TWL67a)

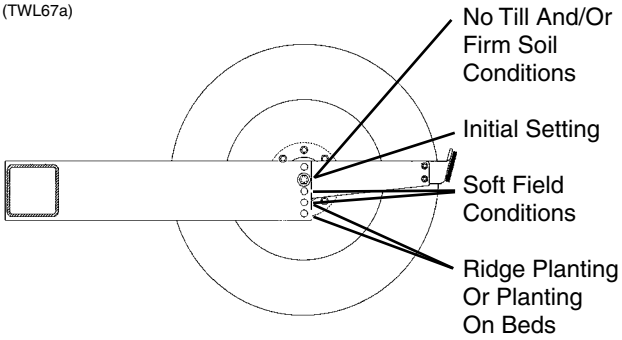

TRANSPORT WHEEL

CAUTION: When using top hole setting, check clearance between tires and drill shaft U-joint prior to operation.

(TWL73a)

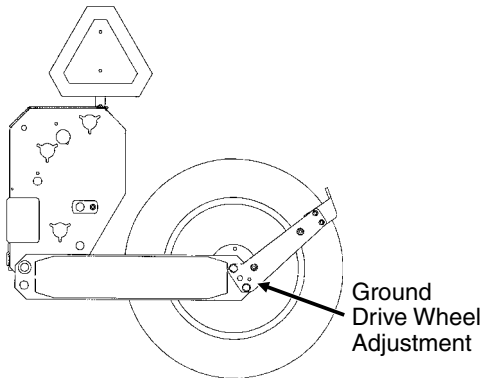

GROUND DRIVE WHEEL

When the planter has been fully loaded with seed, granular chemicals, fertilizer, etc.; a field check should be made to be sure the wings are level with the center frame. If the wings are not level with the center frame, the drive wheels and/or transport wheels can be raised or lowered in the wheel arms to increase or decrease planter toolbar height. Hitch height should be raised accordingly to ensure level operation.

NOTE: As the lift cylinders are port rephasing type, it is necessary for the cylinders to fully retract in order to rephase. Cylinder stops can not be used.

NOTE: On planters equipped with push row units and no till coulters, the uplift from the down pressure springs may cause the wings to rise slightly in planting position. The effect is compounded if static pressure is trapped in the planter's hydraulic lift system causing the wing cylinders to extend slightly. Operating the tractor's hydraulic system in the float position or moving the tractor's hydraulic lever to the float position briefly, to relieve the pressure, will help to maintain the proper toolbar height.

TIRE PRESSURE

D05050845

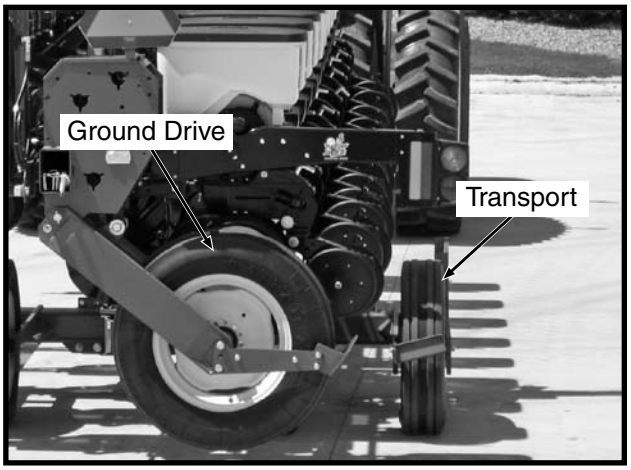

Tire pressure should be checked regularly and maintained as follows:

255-70R 22.5" Transport
(Center Section).....75 PSI
7.50" x 20" Ground Drive (Wings) .....40 PSI
7.60" x 15" Ground Drive
(Liquid Fertilizer Piston Pump).....40 PSI

DANGER: Rim and tire servicing can be dangerous. Explosive separation of tire and rim parts can cause serious injury or death.

Do not attempt to mount a tire unless you have the proper equipment and experience to perform the job. This should only be done by persons properly trained and equipped to do the job.

Always maintain the correct tire pressure. Do not inflate the tires above the recommended pressure.

When inflating tires, use a clip-on air chuck and extension hose long enough to allow you to stand to one side and NOT in front of or over the tire assembly. Use a safety cage to enclose the tire and rim assembly when inflating.

Inspect tires and wheels daily. Do not operate with low pressure, cuts, bubbles, damaged rims or missing lug bolts and nuts.

RIDGE PLANTING

When ridge planting, the drive wheels and transport wheels can be lowered 2" or 4" to the lower mounting holes in the wheel arms to increase the planter toolbar height. The contact drive tire must also be lowered to the lower set of holes in the wheel module and the down pressure springs hooked on the lower rod. Hitch height should be raised accordingly to ensure level operation.
(TWL67a)

Wheel Shown Mounted In Standard Location - Lower 2" Or 4" To Lower Mounting Holes When Ridge Planting

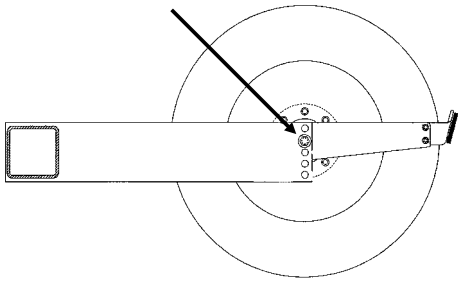

NOTE: The toolbar should operate at a 20"-22" height measured from the bottom of the toolbar to the planting surface.

HYDRAULIC/ELECTRIC OPERATION

76746-24

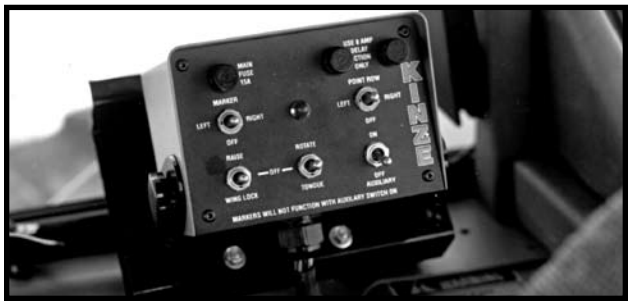

The tractor's hydraulic system and switches on the control console located on the tractor are used to raise the planter to transport position, operate the rotate and tongue extension functions, lock and release the planter wings, and raise and lower the row markers.

DANGER: To avoid serious injury or death care must be taken when operating row markers around overhead power lines.

NOTE: The backlit console is equipped with a push button switch on the back of the console which may be used to turn the light off during extended periods of non-use.

Model 3600V planters are equipped for operation from two dual remote hydraulic outlets. One set of hydraulic outlets, in conjunction with a switch on the control console, are used to operate the raise to transport function. The second set, in conjunction with the switches on the control console, are used to operate the row markers and fold/unfold functions.

The marker switches are an ON-OFF-ON type. (NOTE: All 3600V planters are shipped with the point row switch installed in the control console.)

Power to the marker switch is fed through the auxiliary switch and the two transport function switches. Operating any of the switches in the lower row disables the marker function and turns off the indicator light for the markers.

A7435(TWL81)

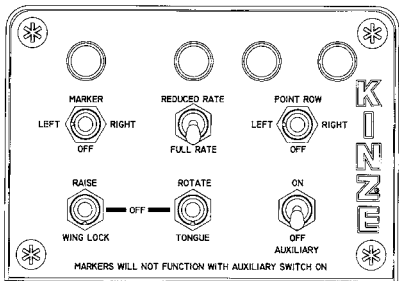

The raise/wing lock and rotate/tongue (fold function) switches are MOMENTARY ON-OFF-MOMENTARY ON type and must be held in position while operating the tractor hydraulic lever. Activating a fold function switch disables the marker circuit.

WARNING: To ensure the safety of the operator and others nearby, the marker selector switch should be placed in its OFF (center) position when not in use. An indicator light on the control box panel is ON whenever the marker circuits or point row clutch circuits are energized.

The auxiliary switch is an ON-OFF type switch which is used in conjunction with the hydraulic marker/folding functions control lever to operate optional attachments. All 3600V planters are shipped with the auxiliary switch installed in the control console. The auxiliary switch must be in the OFF position to enable other functions.

NOTE: Activating the auxiliary switch disables all other control console switches.

NOTE: The lift cylinders are (port type) rephasing cylinders. It is necessary for the cylinders to fully retract before they will rephase in the lowered position. Cylinder stops can not be used.

WARNING: Never work under the planter while in raised position without installing safety lockup devices.

WARNING: Make sure all hydraulic hoses are properly connected before operating the planter. Never connect or disconnect hydraulic hoses without first stopping the tractor engine and moving the hydraulic operating levers in both directions to relieve any pressure in the system.

WARNING: Do not work on planter drive system without first shutting off the tractor or disconnecting the hydraulic lines. The hydraulic drive could start at any time.

HYDRAULIC DRIVE

When stopping in the middle of the field the drive will run a split second after the tractor and planter has come to a complete stop. To avoid the bunching of seeds in this spot shut the master switch off before coming to a complete stop.

To avoid skips when starting from a complete stop in the middle of the field, lift the planter and back-up 4-6 feet, put the planter in the ground, and continue planting. Also, when accelerating from a complete stop, do so very slowly. This will reduce the number of skips in the field when starting from a complete stop.

TRANSPORT TO FIELD SEQUENCE

Position the planter in a relatively flat open area. Try to avoid an area with furrows, etc.

SUMMARIZED TRANSPORT TO FIELD SEQUENCE

- Remove tongue safety pin.
- Remove transport latch locking pin.
- Remove manual safety lockup.
- Rotate planter to planting position.
- Raise planter slightly to release safety hook at top of center section.
- Lower planter to the ground.
- Release wing locks.
- Rephase planter lift cylinders.
- Raise planter to raised field position and retract tongue.
- Remove row marker lockups.

NOTE: Read the following information for more detailed instructions.

D05140801

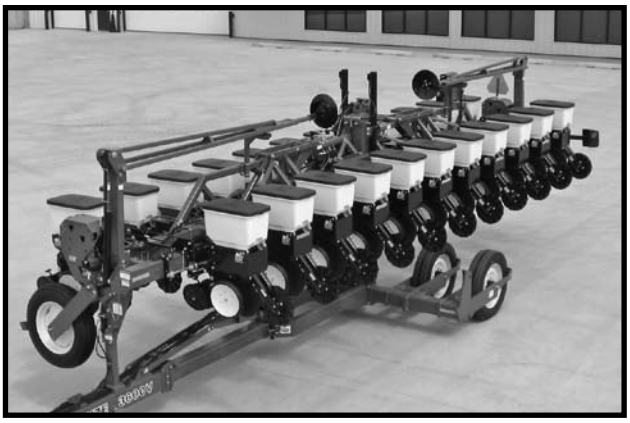

1. With the tongue fully extended and the planter in the raised transport position, remove the tongue safety pin and store it in the storage position.

D05050849

D062501101

2. Remove the transport latch locking pin from the locked position and place it in the storage location.

D060299106

D060299216

3. Remove the manual safety lockup from under the front center lift cylinder and place it in the storage location on the left side of the planter axle.

D060299107

D06189903

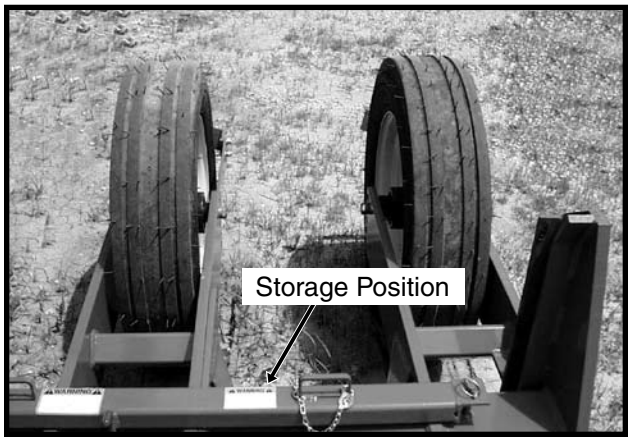

4. Hold the control console switch labeled “ROTATE/ TONGUE” in “**ROTATE**” and operate the hydraulic lever to unfold the planter. The transport latch will automatically release.

76746-24

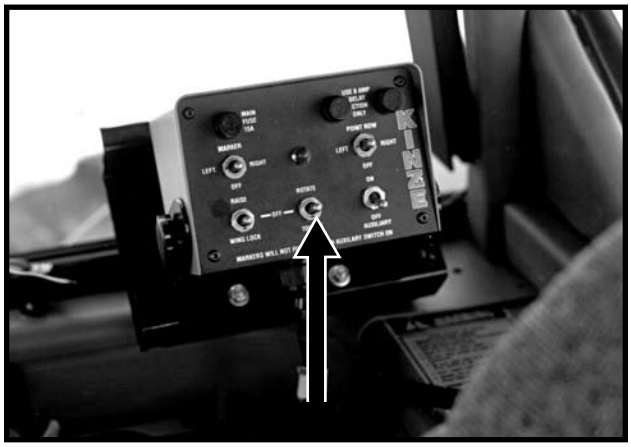

D05140811

5. Raise the planter 1"-2". The safety hook will release and snap away from the catch pin on the top of the pivot post.

82316-16

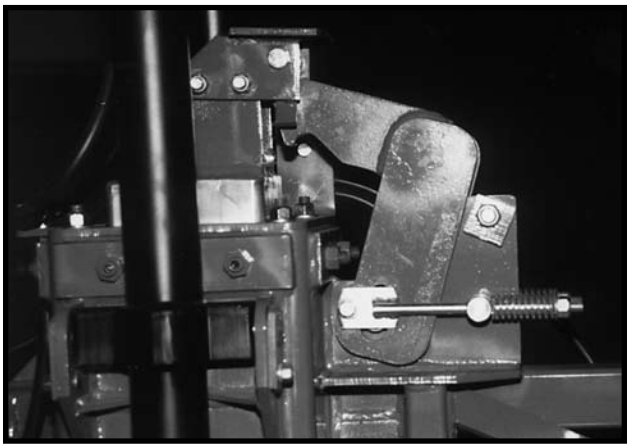

NOTE: Raising the planter too high will reset the hook mechanism and the sequence must be repeated.

6. Slowly lower the planter to the ground.

D05140816

7. Hold the control console switch labeled “RAISE/ WING LOCK” in “**WING LOCK**” and operate the hydraulic lever to release the wing locks.

D05140826

8. Hold the hydraulic lever (to lower planter) to rephase the planter lift cylinders. The length of time it takes to rephase the system may vary due to tractor hydraulic flow and/or oil temperature. Normally 5 to 20 seconds is adequate to rephase the system.

9. Raise the planter to the raised field position. Hold the control console switch labeled “ROTATE/TONGUE” in “**TONGUE**” and operate the hydraulic lever to retract the tongue.

D05140821

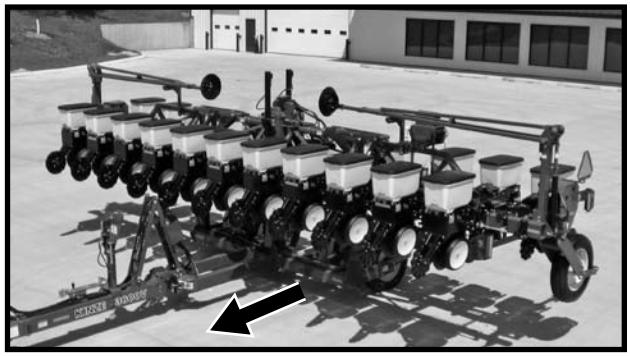

10. Remove and store row marker lockups.

D08250007

FIELD OPERATION

There are two raised positions on the planter. One is the “raised field position” which is when the planter wing cylinders are fully extended and the center lift cylinders are at mid-stroke. Because the solenoid, located on the top side of the valve blocks on the rear R.H. side of the center frame, is not energized, the wing cylinders cannot bypass oil preventing the planter from raising any higher. In the “raised field position” the row units are approximately 14 inches off the ground. This position is used in making turns or passing over waterways during field operation.

D05140838

D060299126

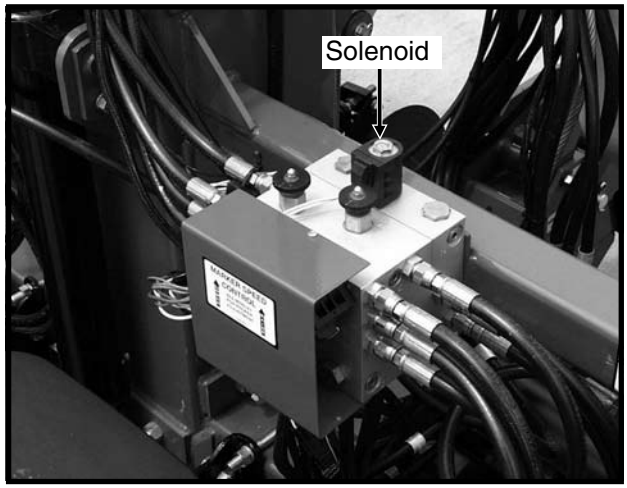

See “Row Marker Operation” for field operation of row markers.

FIELD TO TRANSPORT SEQUENCE

Position the planter in a relatively flat area. Try to avoid an area with furrows, etc.

SUMMARIZED FIELD TO TRANSPORT SEQUENCE

- Install row marker lockups.
- Raise planter to raised field position.
- Extend tongue.
- Lock wings over center
- Raise planter to engage safety hook at top of center section into locking position.
- Lower planter onto safety hook.
- Rotate planter to transport position.
- Install tongue safety pin.
- Install transport latch locking pin.
- Install manual safety lockup.

NOTE: Read the following information for more detailed instructions.

1. Install row marker lockups.

D060299127a

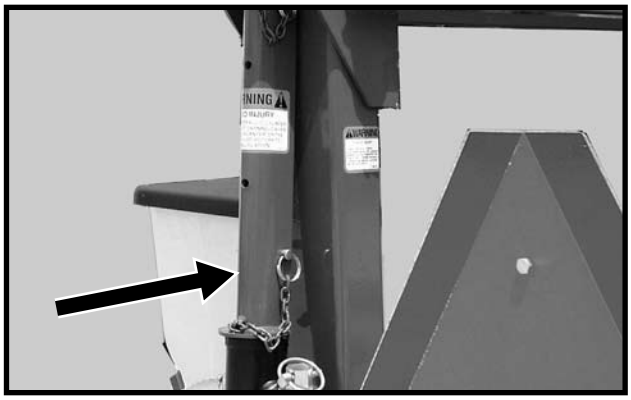

2. Using the hydraulic control, raise the planter to the raised field position as shown below.

D05140838

3. Hold the control console switch labeled “ROTATE/TONGUE” in “**TONGUE**” and operate the hydraulic lever until the tongue is fully extended. Tongue lock latch will automatically release.

D05140838

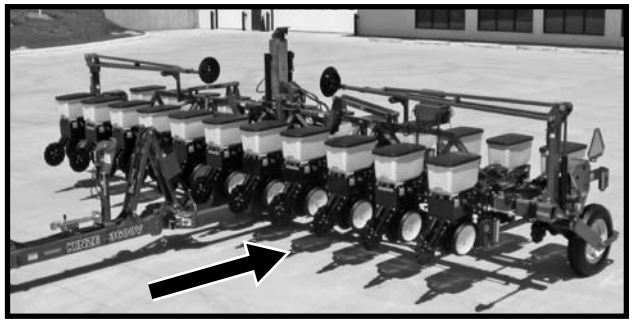

82316-20

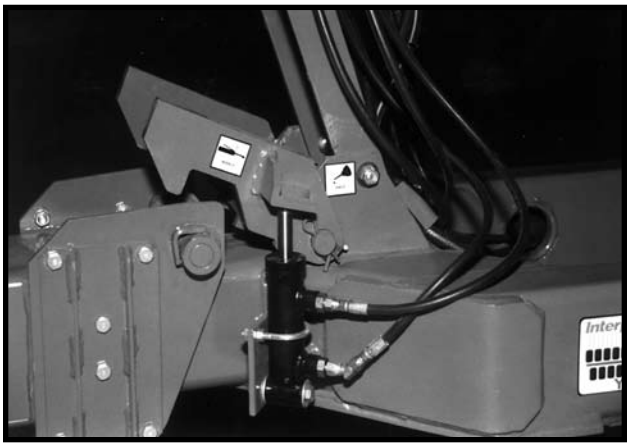

4. Hold the control console switch labeled “RAISE/WING LOCK” in “**WING LOCK**” and operate the hydraulic lever until the wing lock cylinders are fully extended and the wing locks are locked over center.

76746-24

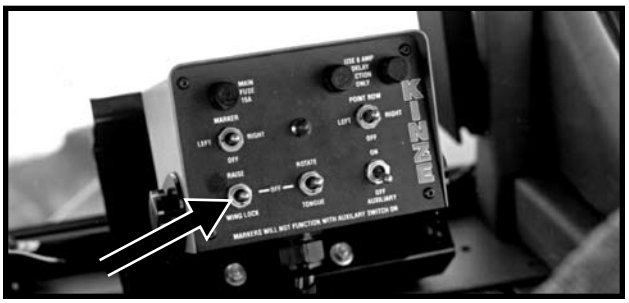

D05140825

5. Hold the control console switch labeled “RAISE/ WING LOCK” in “**RAISE**” and operate the hydraulic lever until the two center lift cylinders are fully extended and the safety hook located at the top of the center section rotates into locking position.

82316-15

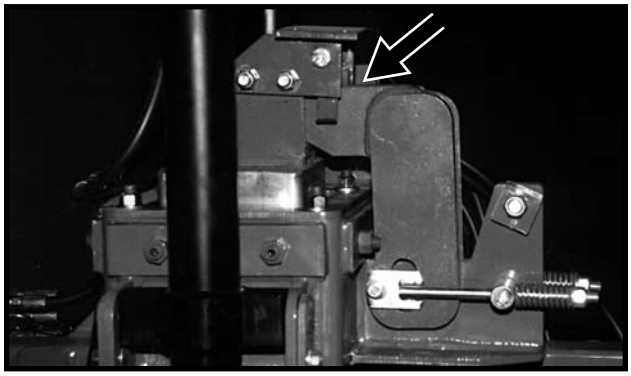

6. Using the hydraulic control, lower the planter onto the safety hook.

7. Hold the control console switch labeled “ROTATE/ TONGUE” in “**ROTATE**” and operate the hydraulic lever to rotate the planter until the transport latch is engaged.

82079-2a

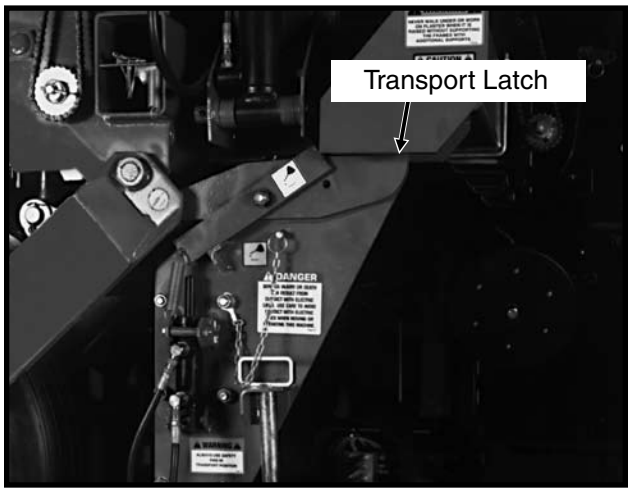

8. Install tongue safety pin.

D05050849

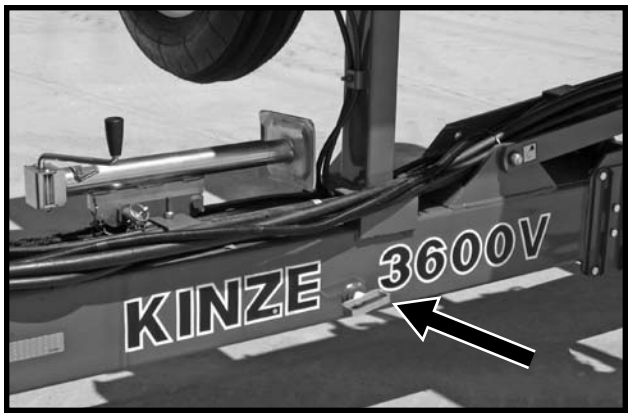

9. Install transport latch locking pin.

D060299106

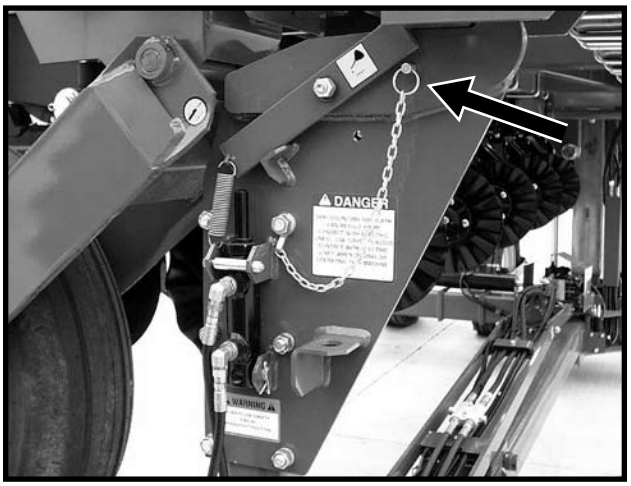

10. Remove manual safety bar from its storage location on the left side of the axle assembly and position it behind the front center lift cylinder.

D06189903

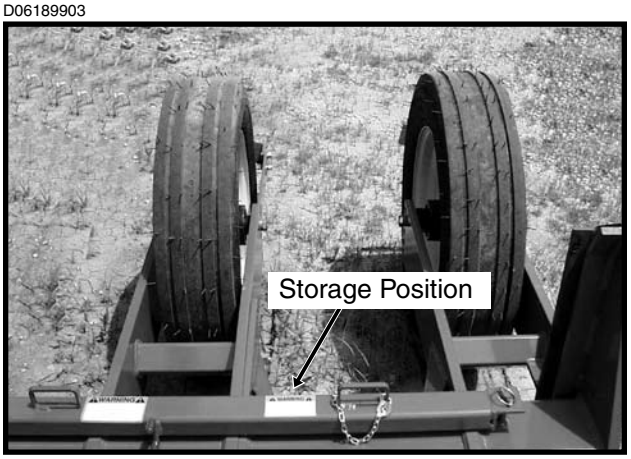

D060299107

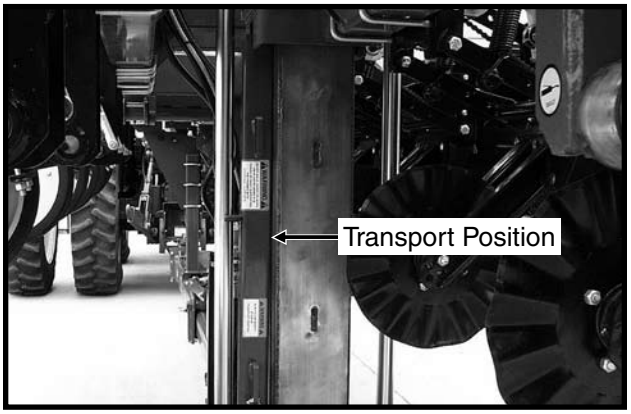

WARNING: Always install the manual safety lockup prior to storage, working under the planter or transporting the planter.

ROW MARKER OPERATION

76740-28

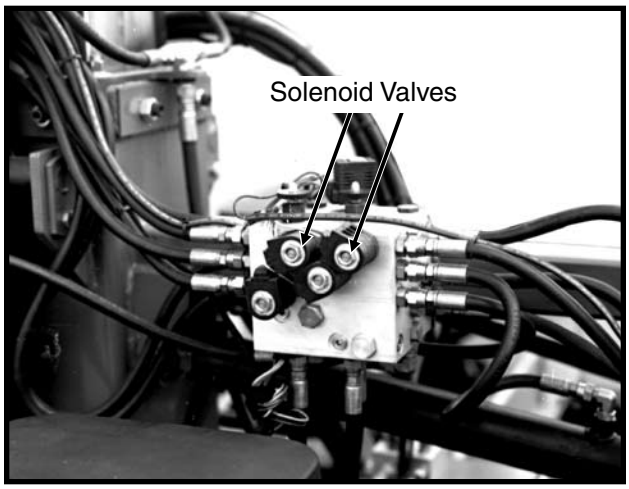

Shown With Cover Removed

D060299126

Shown With Cover Installed

76746-24

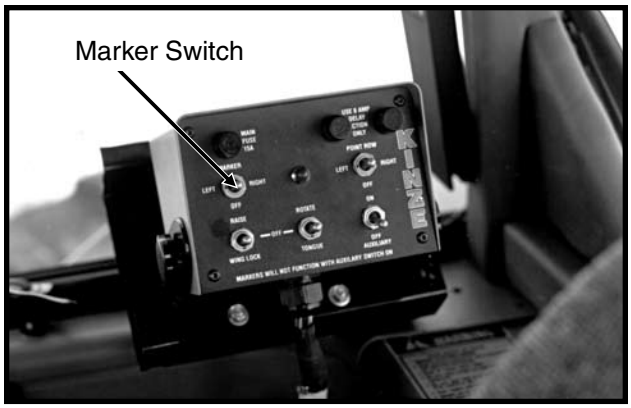

Three Position Selector Switch On Control Console

Two solenoid valves, located on the valve block on the rear R.H. side of the center frame, and a three position selector switch on the control console permit the operator to lower or raise the desired row marker.

See “Row Marker Speed Adjustment”.

1. On the control console, select which marker you want to lower.
2. Operate hydraulic control to lower marker.
3. If opposite marker is to be used next, change control switch to other side.
4. At end of field, using hydraulic control, raise the down marker.
5. After making the turn, using the hydraulic control, lower the pre-selected marker.
6. Continue to follow this procedure.

NOTE: Both markers can be lowered by operating the switch in each position and operating the hydraulic control twice. The row markers will raise simultaneously with the hydraulic control in the raise position.

NOTE: Switch should be left in OFF position when planter is not in use. If left in ON position, it will discharge the tractor battery.

If the electrical system fails to operate properly:

Check fuse.
Check wiring connections.
Check control switch.
Check solenoid. SOLENOID HOUSING WILL BE MAGNETIZED WHEN ENERGIZED.

DANGER: To avoid serious injury or death, care must be taken when operating row markers around overhead power lines.

ROW MARKER SPEED ADJUSTMENT

The marker hydraulic system includes two flow control valves. One flow control valve sets the lowering speed of both markers and one sets the raising speed of both markers. To adjust marker speed, loosen the jam nut and turn the control(s) clockwise, or IN, to slow the travel speed and counterclockwise, or OUT, to increase the travel speed. The flow control(s) determines the amount of oil flow restriction through the valve(s), therefore varying travel speed of the markers. Tighten jam nut after adjustments are complete.

D060299126

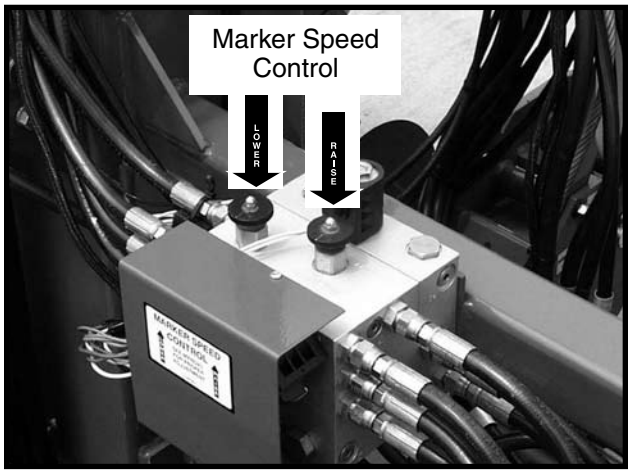

IMPORTANT: The flow controls should be properly adjusted to restrict flow before the row marker assembly is first put into use. Excessive row marker travel speed of the marker can damage the marker assembly.

NOTE: When oil is cold, hydraulics operate slowly. Make sure all adjustments are made with warm oil.

NOTE: On a tractor where the oil flow can not be controlled, the rate of flow of oil from the tractor may be greater than the rate at which the marker cylinder can accept the oil. The tractor hydraulic control lever will have to be held until the cylinder reaches the end of its stroke. This occurs most often on tractors with an open center hydraulic system.

On tractors equipped with flow control valves, row marker speed adjustment should be made with the tractor flow controls in maximum position. After row marker speed is set, the tractor flow controls can be adjusted to allow the hydraulic lever to stay in detent during the marker raise or lower cycle.

DANGER: To avoid serious injury or death, care must be taken when operating row markers around power lines.

ROW MARKER LENGTH ADJUSTMENT

To determine the correct length at which to set the row marker assemblies, multiply the number of rows by the average row spacing in inches. This provides the total planting width. Adjust the marker extension so the distance from the marker disc blade to the center line of the planter is equal to the total planting width previously obtained. Both the planter and row marker assembly should be lowered to the ground when measurements are being taken. The measurement should be taken from the point where the blade contacts the ground. Adjust right and left row marker assemblies equally and securely tighten clamping bolts. An example of row marker length adjustment follows:

Number Of Rows	x	Row Spacing (Inches)	=	Dimension Between Planter Center Line And Marker Disc Blade

12 Rows x 30" Spacing = 360" Marker Dimension

60569-53

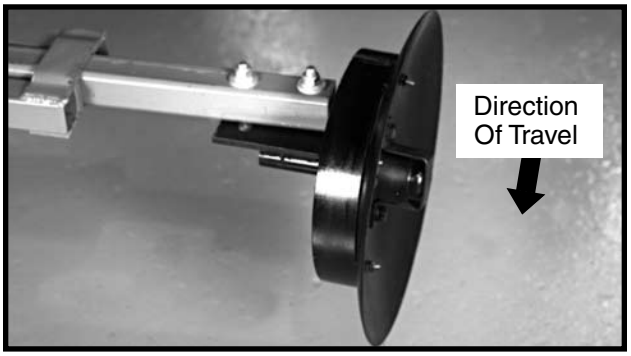

Row Marker Disc Blade Shown With Depth Band

The row marker disc blade should be installed so the concave side of the blade faces outward to throw dirt away from the grease seals. The spindle assembly is slotted so the hub and blade can be angled to throw more or less dirt. To adjust the hub and spindle, loosen the ½" hardware and move the assembly as required. Tighten bolts to the specified torque.

IMPORTANT: A row marker disc blade assembly that is set at a sharper angle than necessary will add unnecessary stress to the complete row marker assembly and shorten the life of bearings and blades. Set the blade angle only as needed to leave a clear mark.

A field test is recommended to ensure the row markers are properly adjusted. After the field test is made, make any minor adjustments as necessary.

Notched marker disc blade, for use in more severe no till conditions, are available from KINZE® through your KINZE® Dealer. (Continued On Following Page)

When using the even-row push row unit option, adjust marker extensions as shown below.

(PLTR132g/INS172a/INS172)

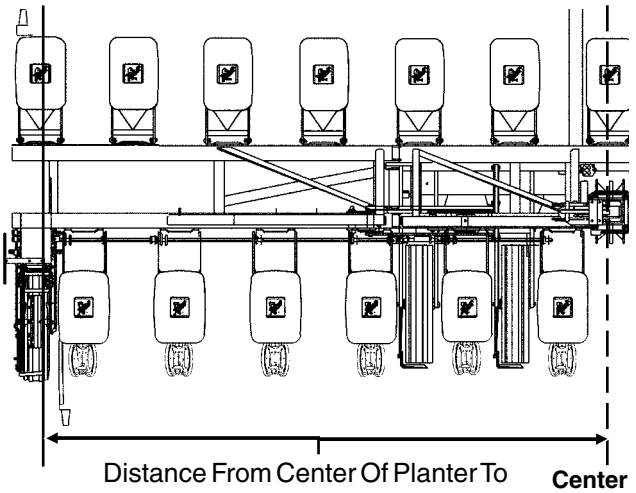

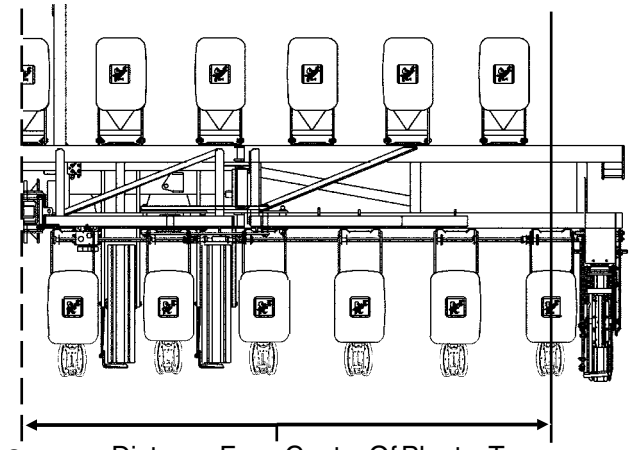

Center Of Planter To Center Of Outer Row Unit	x	2	+	15" Row Spacing	=	Dimension Between Planter Center Line And Marker Blade

12 Row 30" With 12 Interplant® Push Row Units (L.H. Marker 180" x 2 + 15" = 375")
(R.H. Marker 165" x 2 + 15" = 345")

16 Row 30" With 16 Interplant® Push Row Units
(L.H. Marker 240" x 2 + 15" = 495")
(R.H. Marker 225" x 2 + 15" = 465")

NOTE: If tractor hitch is offset 7 ½" to the right of the center line of the tractor, add 7 ½" to the marker dimension on the R.H. side of the planter and subtract 7 ½" from the marker dimension on the L.H. side of the planter.

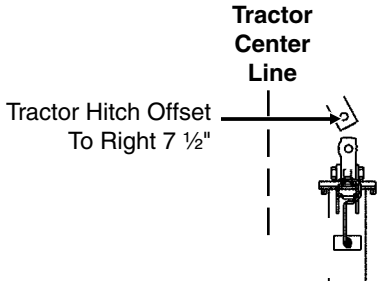

NOTE: Readjust markers when planting 30" rows.

KINZE VISION® SYSTEM

The KINZE Vision display is a GPS-compatible universal monitor/controller for use in crop productionand protection. It can easily be transferred between multiple vehicles through out the growing season to maximize your return on investment. The KINZE Vision display has its own internal memory for recording GPS and logging all information collected during various field activities. The KINZE Vision display has been built to with stand the harsh environment associated with today's agricultural industry. The weather tight enclosure is designed to seal out any dirt and moisture encountered during normal operating conditions.

NOTE: See operator manual supplied with KINZE Vision® display for installation and programming.

D012908205

PLANTER MONITOR MODULE (PMM)

The PMM Magnetic Distance Sensor Package includes a planter-mounted module enclosure with cover and mounting hardware, seed tubes w/sensors, planter harness, planter monitor cable, shaft rotation sensors and magnetic distance sensor components.

NOTE: See operator manual supplied with KINZE Vision® display for installation and programming.

D11200710a

ROW UNIT AIR CLUTCHES

Air clutch system pressure should be set at 50 psi.

D05010824

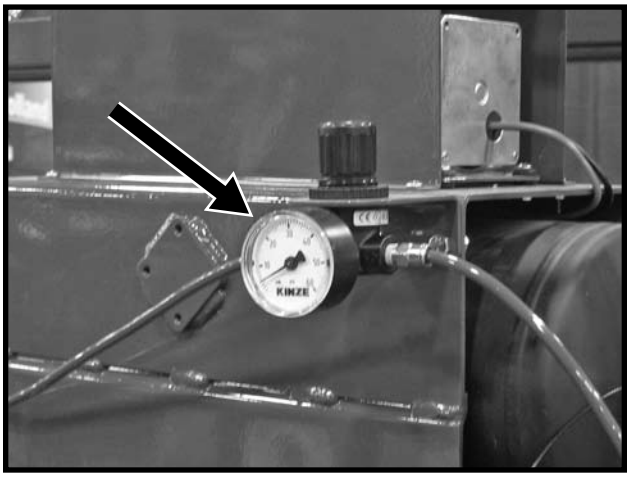

ROCK GUARDS

(PLTR49a)

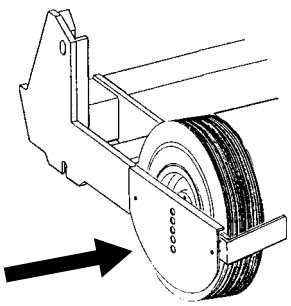

Transport wheel rock guards are designed for use on both sides of each of the four center transport wheels when the planter is used in rocky conditions. Rock guards will help prevent rocks, which can cause damage to the row units, from being picked up by the wheels.

AUXILIARY WORK LIGHTS PACKAGE

D05160505a

The optional Auxiliary Work Lights Package includes two 50 watt, 3" x 5" halogen flood lamps, hardware to mount lights at the top of one of the center lift cylinders and a wiring harness to plug into the existing planter light harness.

EVEN-ROW PUSH ROW UNIT

(PLTR132g)

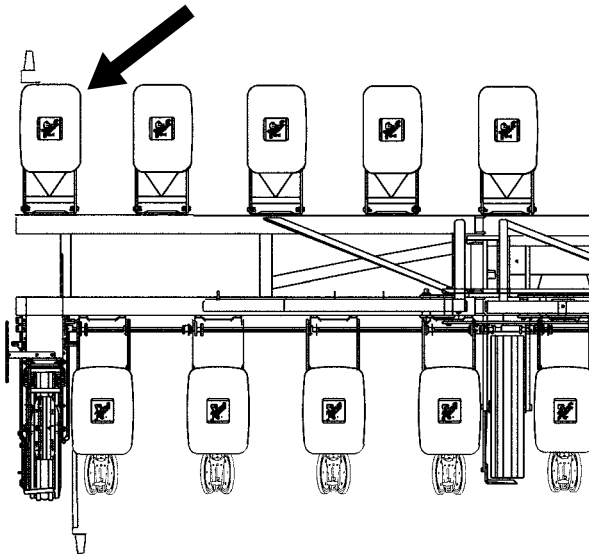

An Even-Row Push Row Unit Package is available to add one additional push row unit onto the L.H. side of the outer end of the front toolbar for use along with the Solid Row Interplant® Package.

NOTE: See "Row Marker Length Adjustment" in the Machine Operation section for determining correct length at which to set the row marker assemblies when using the even-row push row unit.

AUXILIARY HYDRAULIC OPTION

A customer-supplied auxiliary hydraulic option may be added to provide 10 GPM of oil flow at the rear of the planter. This option may be used for powering fertilizer attachments, bulk seed handling equipment, etc.Two customer-supplied solenoid valve kits (G1K275) are required to activate the auxiliary hydraulic option using the auxiliary switch on the control console.

77612-6

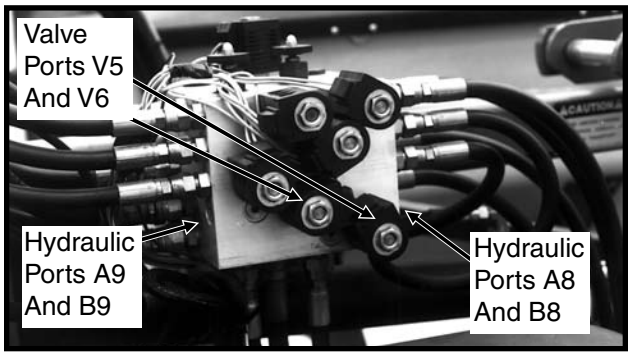

Valve Block Located On Rear Center Frame (Shown With Cover Removed)

76746-24

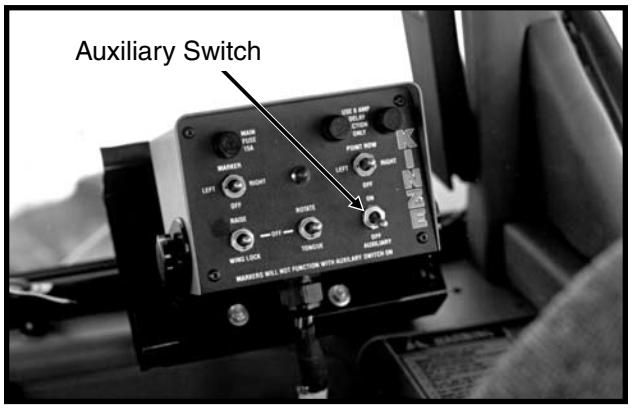

NOTE: Be sure row markers are in transport position and all pressure is removed from the hydraulic system.

Remove the cover from the valve block, located on the rear center frame of the planter. Remove plugs from ports V5 and V6 and install the solenoid valve assemblies following the installation instruction supplied with each kit. Power to the solenoid assemblies should be connected to the orange/black wire located in the wiring harness connection to the L.H. side of the valve block.

Remove plugs from ¾"-16 O-ring ports A8 and B8 on R.H. side of valve block or ports A9 and B9 on L.H. side of valve block. Connect customer-supplied hydraulic hoses.

Refer to “Hydraulic System Schematics” and “Electrical Wiring Schematics” in the Maintenance Section of this manual for additional information.

WARNING: Before applying pressure to the hydraulic system, make sure all connections are tight and that hoses and fittings have not been damaged. Hydraulic fluid escaping under pressure can have sufficient force to penetrate skin, causing injury or infection.

Before operating the auxiliary system be sure the marker switch on the control console is in the OFF position. Move the auxiliary switch on the control console to ON position. Operate hydraulic control lever (marker/folding functions) to engage auxiliary system.

NOTE: Auxiliary switch left in ON position disables all other control console switches.

DOUBLE DISC FERTILIZER OPENER

The double disc fertilizer openers should be positioned during assembly **to place fertilizer no closer than 2" to either side of the row.** If the planter frame is level and at proper 20" operating height, fertilizer depth will be approximately 4". Soil conditions can affect depth slightly.

The down pressure spring is factory preset at 250 lbs. down pressure but may be adjusted for various soil conditions. To adjust spring tension, loosen the jam nut with a 15⁄16" wrench and use a 1" wrench to turn the adjustment bolt clockwise to increase tension or counterclockwise to decrease tension. Securely tighten the jam nut upon completion of tension adjustment. Do not attempt to set opener depth with spring pressure. The opener is designed to operate against a depth stop and spring up when encountering a foreign object or hard ground.

IMPORTANT: Do not operate the double disc openers at full down pressure tension when planting in rocky ground. Chipping of the disc blades will occur.

A gap of 1⁄32" to 1⁄16" should be maintained between the opener blades at the closest point. Blade adjustment is made by moving inside spacer washers to the outer side of the blade. After making this adjustment, check to be sure bearing assembly rivets are not contacting the shank.

D06259919

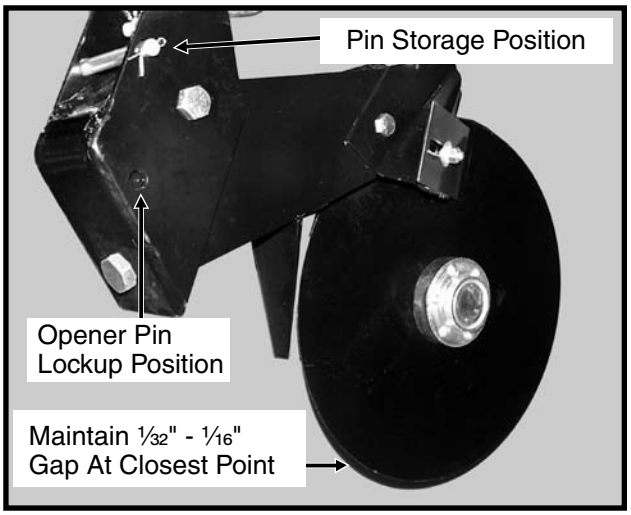

The outer scrapers on each disc blade may also be adjusted to make up for wear that may occur. Make sure the scrapers are adjusted to allow only slight contact with the blades.

The opener assembly is designed to be locked in a raised position when the fertilizer attachment is not in use or during storage. To lock the opener up, first raise the planter and place blocks under the openers. Then lower the planter until the hole in the pivot section aligns with the hole in the mounting bracket. Remove the lockup pin from the storage position in the mounting bracket and install it through the lockup hole and secure with cotter pins.

WARNING: Always install all cylinder lockup devices before working under the unit.

NOTCHED SINGLE DISC FERTILIZER OPENER

The notched single disc fertilizer opener is designed for use in minimum and no till planting conditions. Placement of fertilizer with the 16 ¾" diameter notched single disc fertilizer opener is recommended at 2 ½"- 3" from the row. The opener is designed to hold the blade at a set-angle so the knife and drop tube operate in the shadow of the blade. **Never locate the opener to place fertilizer closer than 2".**

WARNING: Spring under pressure. DO NOT disassemble.

(A12429a/B0297)

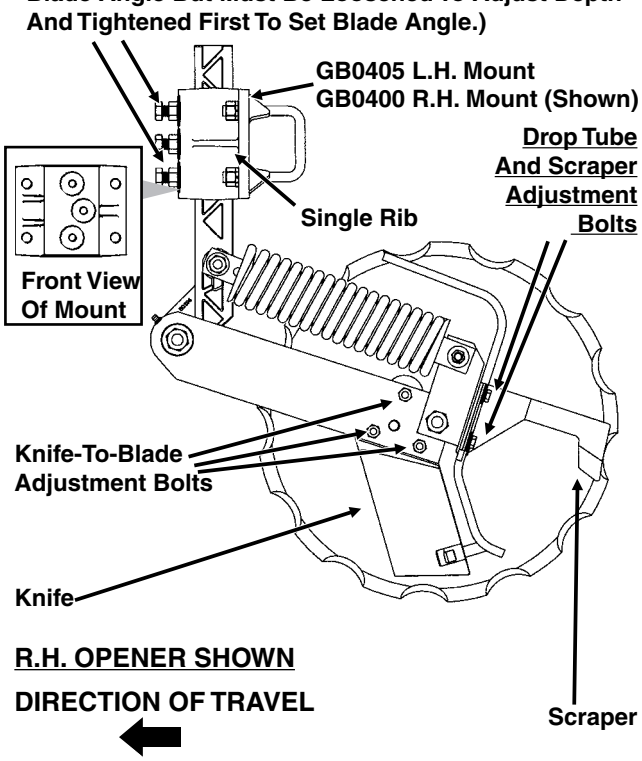

Adjust knife-to-blade contact on each fertilizer opener so blade will turn by hand with slight resistance, but will not coast or freewheel. In dry, loose soil the knife adjustment is critical. If adjustment is not maintained, soil or residue may wedge between knife and blade, resulting in the blade not turning. If the knife is adjusted too tight, the blade will not turn causing the blade to push soil and residue. **Knife adjustment is made using the three ⅜" mounting carriage bolts** and pivot pad on the knife. Because of blade runout, rotate blade one full revolution after adjustment. Readjust knife to the blade's tight spot as needed. **Never strike the knife with a heavy object or damage may occur.**

Using the slotted mounting holes in the drop tube mount, **adjust fertilizer drop tube** behind the knife so it is protected from soil contact and wear. The liquid drop tube should be adjusted ¼"- ⅜" from the opener blade while keeping it behind the knife. Insert a flat bladed pry bar between the knife and drop tube just above the drop tube tab as shown below. Bend the tube inward toward the disc blade to obtain the desired ¼"- ⅜" adjustment.

D01040702

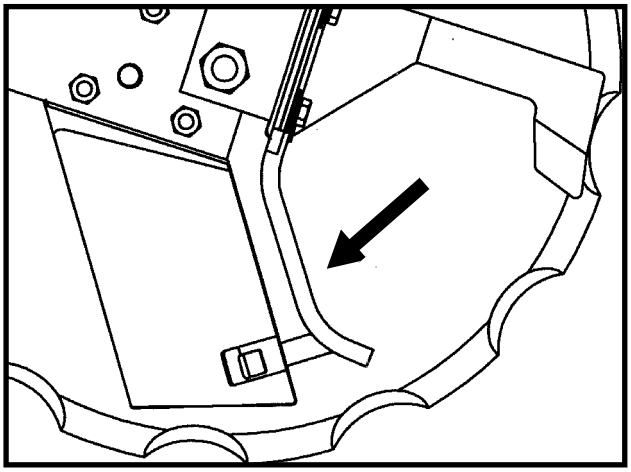

NOTE: Adjusting the liquid drop tube will ensure it is out of the path of the soil flow across the knife. Drop tube and tab will wear quickly if not adjusted correctly.

Adjust scraper to just touch the opener blade. As the mounting hardware is tightened, the scraper is drawn tighter to the blade. After adjustment, rotate opener blade to be sure blade will turn by hand with slight resistance, but will not coast or freewheel.

Adjust blade depth on each row using the cap screws and jam nuts located on the opener mount. The blade can be adjusted to allow a maximum 4" blade depth. Check fertilizer hose clearance (If Applicable) after adjusting opener depth. Torque cap screws and jam nuts to 57 ft. lbs.

NOTE: The blade cuts through the soil at an angle relative to the direction of travel. For this reason and to ensure proper operation, <u>the cast mount should be oriented so the front and bottom of the blade tilt towards the knife.</u>

D01160802

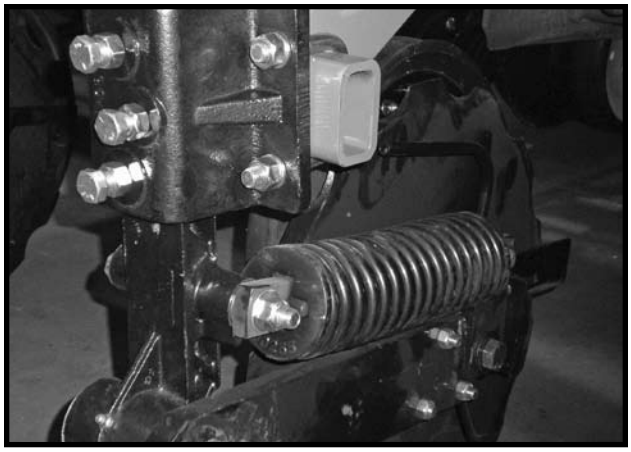

R.H. Opener (B0400)

D01160801

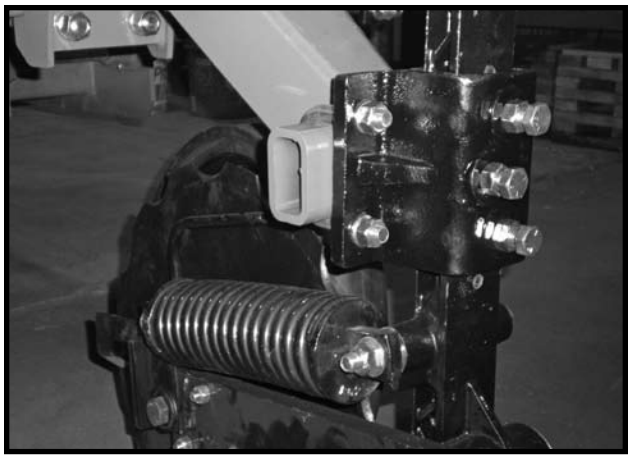

L.H. Opener (B0405)

FRTZ296

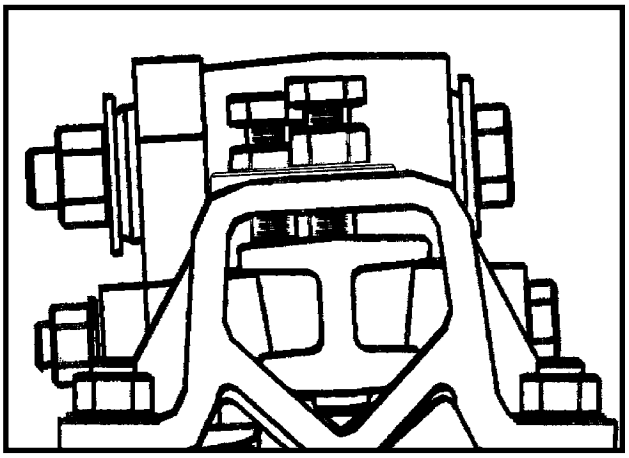

D070103100

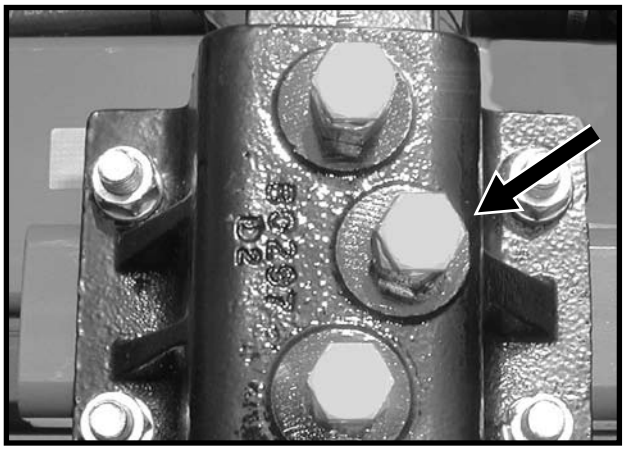

NOTE: Recommended maximum operating depth is 4". To adjust depth: (a) Loosen depth adjustment cap screws. (b) Adjust depth to desired setting. (c) Tighten upper and lower cap screws slightly to hold opener arm in place. (d) Tighten middle cap screw to set the opener arm angle. (e) Tighten upper and lower cap screws and all jam nuts.

RESIDUE WHEEL ATTACHMENT FOR NOTCHED SINGLE DISC FERTILIZER OPENER

D052201104

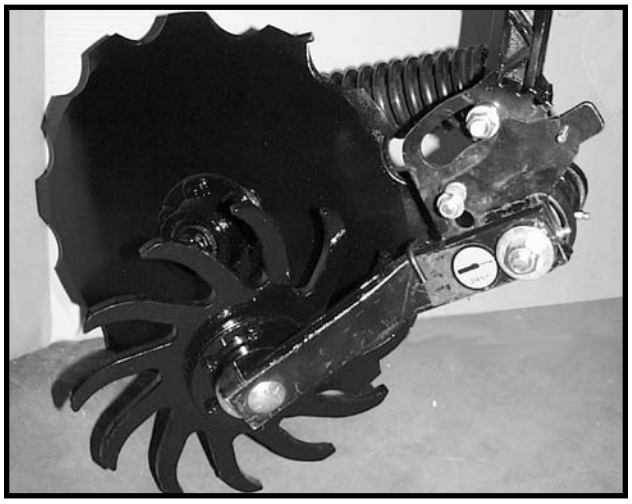

The residue wheel attachment for the notched single disc fertilizer opener is designed for applications where row unit mounted residue wheel attachments cannot be installed. The residue wheel is attached to the notched single disc fertilizer opener using ⅝" x 7 ½" and ½" x 6 ½" hardware.

Maximum depth is set by lifting the residue wheel and moving the adjustment lever down to increase depth or up to decrease depth in 1" increments (in relation to blade depth setting). Adjust all rows the same. Down force on the residue wheel is maintained by a torsion spring and is not adjustable.

Due to space restrictions, the residue wheel attachment for the notched single disc fertilizer opener is not applicable to Model 3600 Planters equipped with Interplant® push row units and notched single disc fertilizer openers.

DEPTH/GAUGE WHEEL ATTACHMENT FOR NOTCHED SINGLE DISC FERTILIZER OPENER

D061101202a

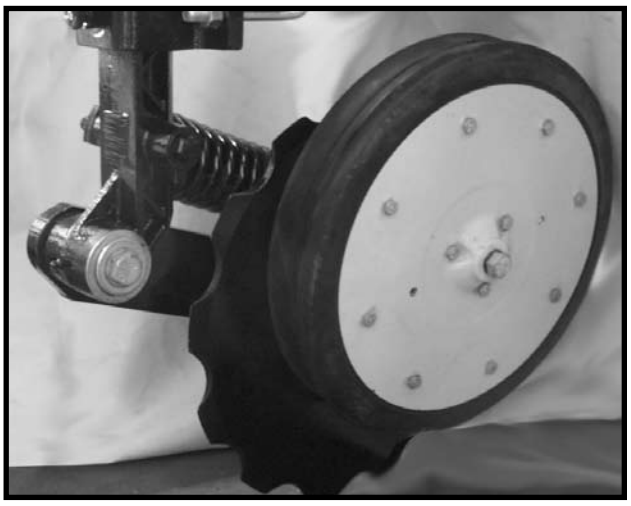

The depth/gauge wheel attachment for the notched single disc fertilizer opener is designed for use in situations where additional gauging is required to maintain desired fertilizer opener depth. The depth/gauge wheel is attached to the notched single disc fertilizer opener using a mounting block fastened to the pivot arm using ⅝" hardware through the disc blade hub w/bearing.

Depth adjustment is made by using the depth/gauge wheel mounting block. Moving the depth/gauge wheel increases/decreases depth in approximate 1" increments in relation to the blade depth setting made at the vertical mounting post.

(FRTZ256a)

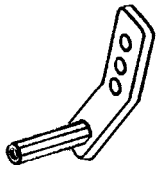

Due to space restrictions, the depth/gauge wheel attachment for the notched single disc fertilizer opener is not applicable to Model 3600 Planters equipped with Interplant® push row units and notched single disc fertilizer openers.

HD SINGLE DISC FERTILIZER OPENER

D062601103

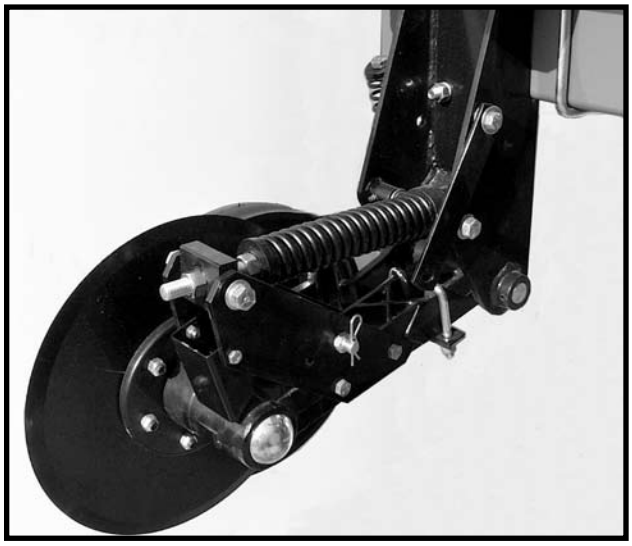

Placement of fertilizer with the HD single disc fertilizer opener is recommended at 3 ½" - 4" from the row. **Never locate the opener to place fertilizer closer than 2".**

If planter frame is level and at 20" operating height, maximum blade depth for placement of fertilizer is approximately 5". Soil conditions can affect depth slightly.

To adjust blade depth, raise the planter to remove weight from the fertilizer opener. Loosen inside adjustment nut (A) with 1 ⅛" wrench. Turn outside nut (B) clockwise to decrease blade depth or counterclockwise to increase blade depth. One full turn of the blade depth adjustment nut changes blade depth ⅜". Tighten inside nut tight against block (C). Adjust all fertilizer openers to the same depth.

L0114(PLTR3)

DIRECTION OF TRAVEL

(Overhead View)

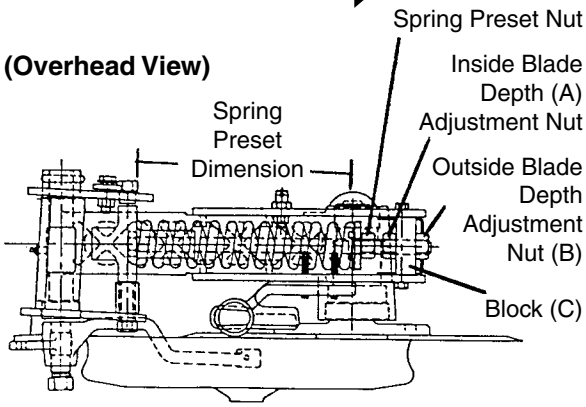

R.H. Configuration Shown

Fertilizer opener down pressure can be adjusted from 250 lbs. to 640 lbs. **To make down pressure adjustments**, raise planter to remove weight from the fertilizer opener and turn spring preset nut clockwise to increase down pressure and counterclockwise to decrease down pressure. Adjust all rows to a similar setting. Minimal spring pressure for acceptable operation is recommended. See chart for spring length setting specifications.

SPRING PRESET DIMENSION	DOWN PRESSURE (LBS.)
11"	250
10 ¾"	320
***10 ½"**	**370**
10 ¼"	450
10"	520
9 ¾"	580
9 ½"	640

* Suggested initial setting.

NOTE: DO NOT adjust spring preset dimension to less than 9 ½".

NOTE: Excessive down pressure can cause up-lift on the planter frame and affect performance of the machine. When lowered to planting position, planter frame should be at a height of approximately 20". In loose soil conditions, excessive down pressure can cause openers to run too deep and push dirt ahead of opener and may stop soil press wheel and/or opener blade from turning.

WARNING: Always install all safety lockup devices before working under the machine.

IMPORTANT: Do not operate HD single disc fertilizer openers at full down pressure tension when planting in rocky ground. Chipping or breakage of the blades will occur.

The spring loaded dry fertilizer drop tube/scraper should be adjusted periodically to maintain ⅛" gap between drop tube and opener blade. If this dimension is not maintained the fertilizer may not drop into the proper location.

Loosen scraper adjustment bolt. Slotted hole in scraper allows up or down adjustment.

FOC016(PLTR4)

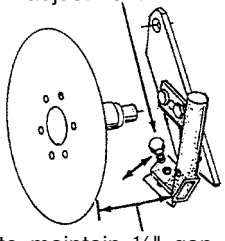

Adjust scraper to maintain ⅛" gap between drop tube and opener blade. Distance is exaggerated in above illustration.

Maintain liquid fertilizer drop tube/scraper adjustment as shown below.

(INS16a)

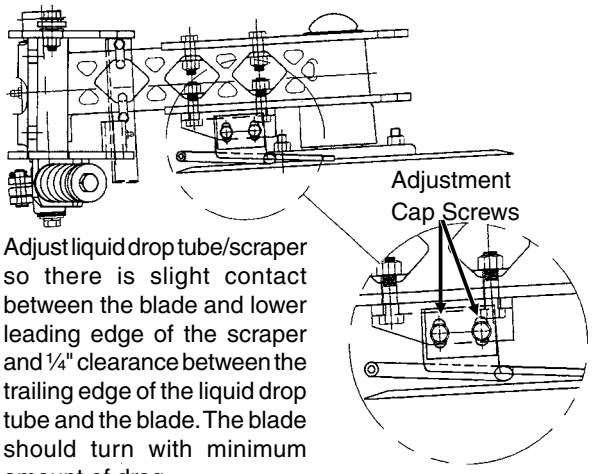

Adjust liquid drop tube/scraper so there is slight contact between the blade and lower leading edge of the scraper and ¼" clearance between the trailing edge of the liquid drop tube and the blade. The blade should turn with minimum amount of drag.

Additional press wheel down pressure may be desirable in heavy moist soils. **To increase press wheel spring pressure** turn press wheel spring adjustment bolt clockwise.

D121202101

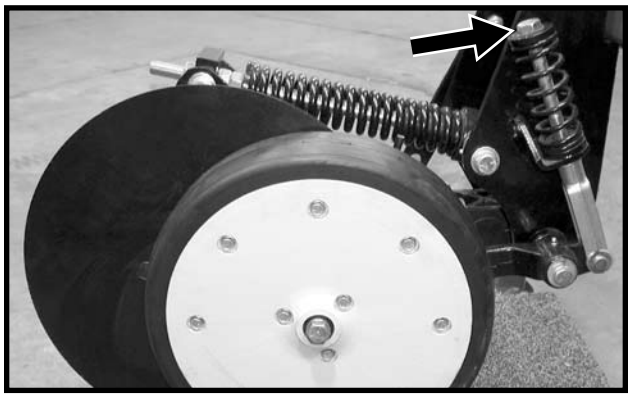

NOTE: The soil press wheel is not intended to be used for gauging fertilizer opener operating depth.

The HD single disc fertilizer opener is designed to be locked in a raised position when the fertilizer attachment is not in use or during storage.

To lock the HD single disc fertilizer opener in the raised position, proceed as follows:

STEP 1 With the planter in the planting position, remove outside blade depth adjustment nut. (“B” in illustration on previous page.)

STEP 2 Raise planter until adjustment bolt clears adjustment block.

STEP 3 Raise spring to clear blade assembly and at the same time raise blade assembly until storage strap can be positioned onto lockup pin and install hair pin clip.

STEP 4 Reinstall depth adjustment nut and tighten.

D062601102

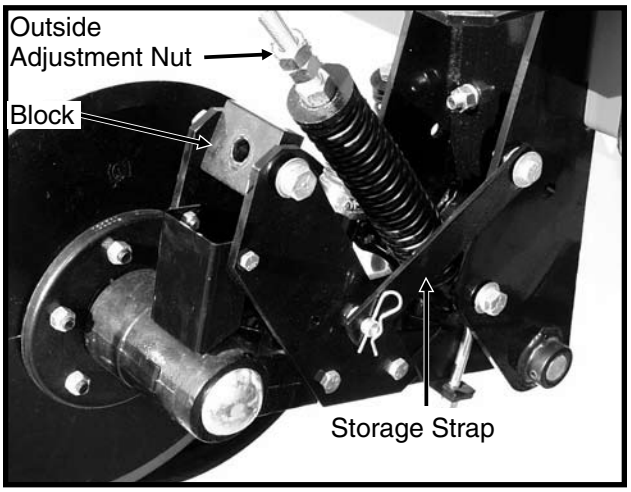

NOTE: The HD single disc fertilizer opener is equipped with a lockup bar that automatically raises and locks the soil press wheel when the blade assembly is raised.

FOC016(PLTR5b)

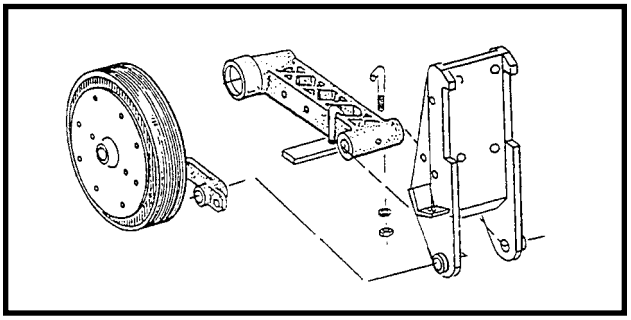

LIQUID FERTILIZER ATTACHMENT

NOTE: An optional low rate check valve is available for installation in-line between the liquid fertilizer squeeze or piston pump and the liquid fertilizer openers to ensure equal distribution of product at low rates. The check valves also eliminate the need for anti-siphon loop if the valves are installed as close as possible to the fertilizer opener drop tubes.

(FRTZ208)

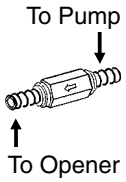

D062991118

Shown With Notched Single Disc Fertilizer Openers Installed

OPTIONAL PISTON PUMP

NGP7055

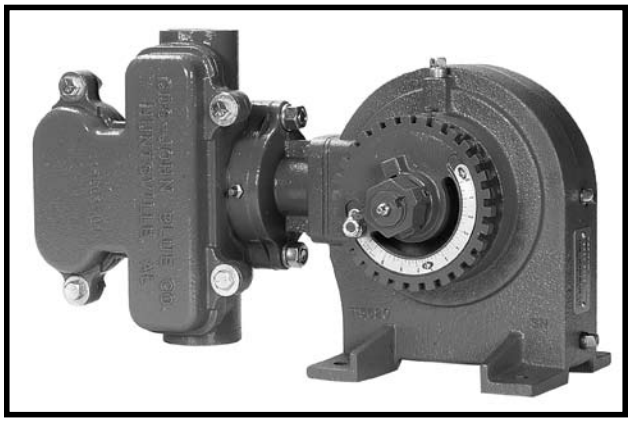

If the machine is equipped with the piston pump option, the rate of liquid fertilizer application is determined by the piston pump settings.

The delivery rate chart found at the end of this section provides an approximate application rate only. Actual delivery will vary with temperature and the particular fertilizer being used.

To adjust delivery rate, loosen the ⅜" lock nut that secures the arm with the pointer and rotate the scale flange until the pointer is over the desired scale setting. The adjustment wrench will facilitate rotation of the scale flange. Tighten the ⅜" lock nut being careful not to over tighten.

(A12335)

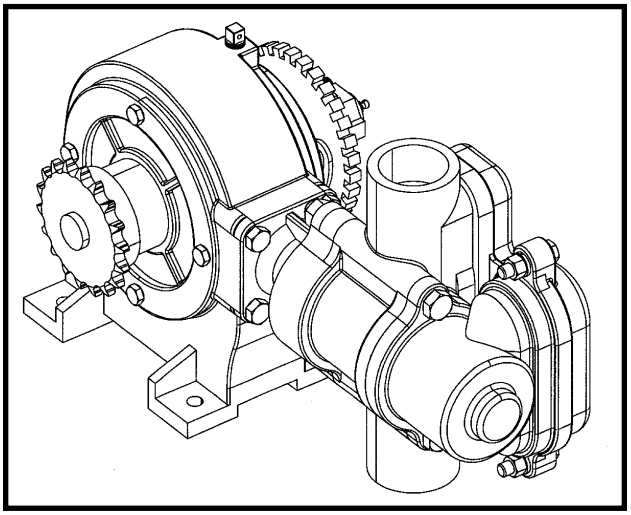

The operator and instruction manual shipped with the pump and flow divider should be kept and stored with this manual for future reference.

NOTE: Periodically check flow to all rows. If one or more lines are plugged, set rate will be delivered to remaining rows.

PISTON PUMP GROUND DRIVE WHEEL SPRING ADJUSTMENT

Initial spring tension of the down pressure spring on the piston pump ground drive wheel is set leaving 12 ¼" between the bottom of the mounting plate and the plug on top of the spring. This dimension is taken with the planter in raised position (tire not contacting the ground). Further adjustment can be made to fit conditions.

(TWL219tt)

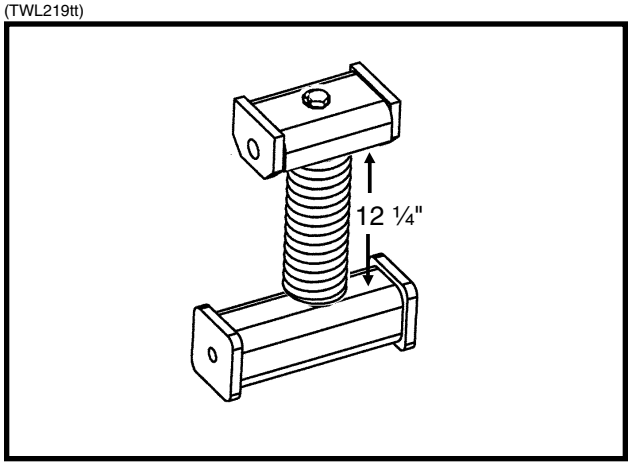

NOTE: The piston pump ground drive wheel assembly is designed to allow the assembly to be locked in raised position when not in use. Remove the two cap screws that attach the upper end of the spring to the spring mount. Reattach the spring using the upper holes in the spring mount. Reverse procedure to reset for field use.

CLEANING

The tanks and all hoses are made of sturdy plastic and rubber to resist corrosion. However, the tanks, hoses and metering pump should be thoroughly cleaned with water at the end of the planting season or prior to an extended period of non-use. Do not allow fertilizer to crystalize due to cold temperature or evaporation.

The strainer, located between the piston pump and ball valve (On machines equipped with the piston pump.), should be taken apart and cleaned daily. Remove the end cap to clean the screen.

(INS220)

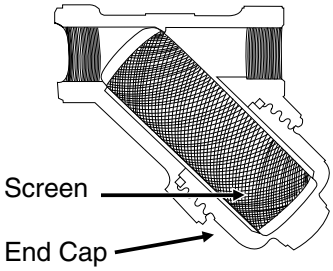

See “Piston Pump Storage” (If Applicable) in the Maintenance section of this manual.

REAR TRAILER HITCH

D07309901a

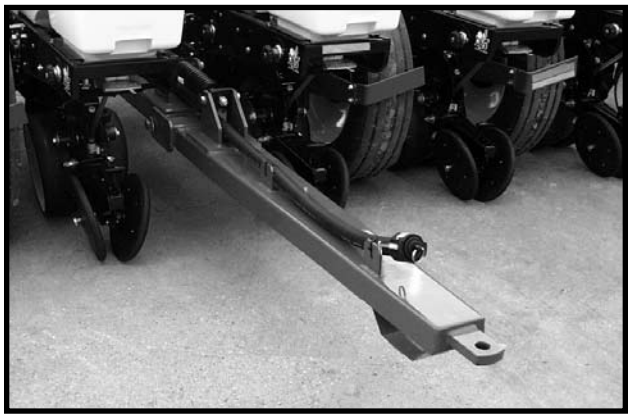

The Rear Trailer Hitch is used to tow a 3 or 4 wheel wagon behind the planter. A spring, chain and mounting bracket are used to support the 1 ¼" feed hose from the hitch to the piston pump. This extra length or loop is required to allow the planter to be moved into transport position without stretching the hose.

IMPORTANT: The rear trailer hitch is designed for use with piston pump only. Maximum allowable hitch weight is 200 lbs. Gross towing weight should not exceed 6000 lbs. or the equivalent of a loaded 500 gallon tank and running gear.

76782-80

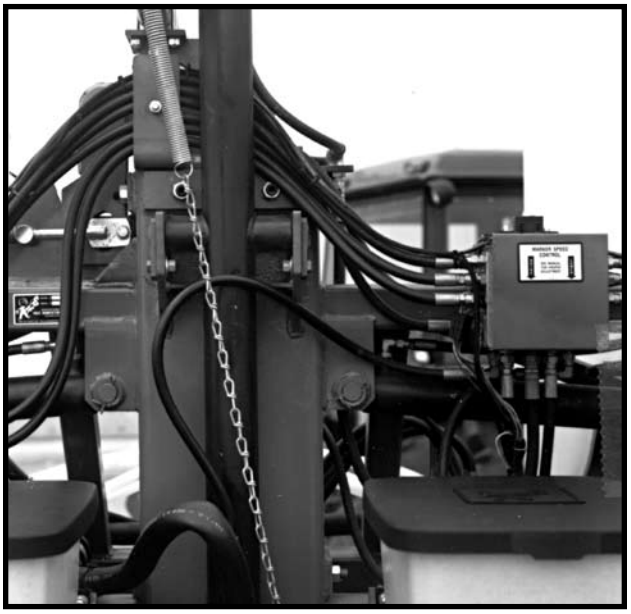

NOTE: Periodically check feed hose for kinks to prevent restricted delivery rate.

(PLTR133h)

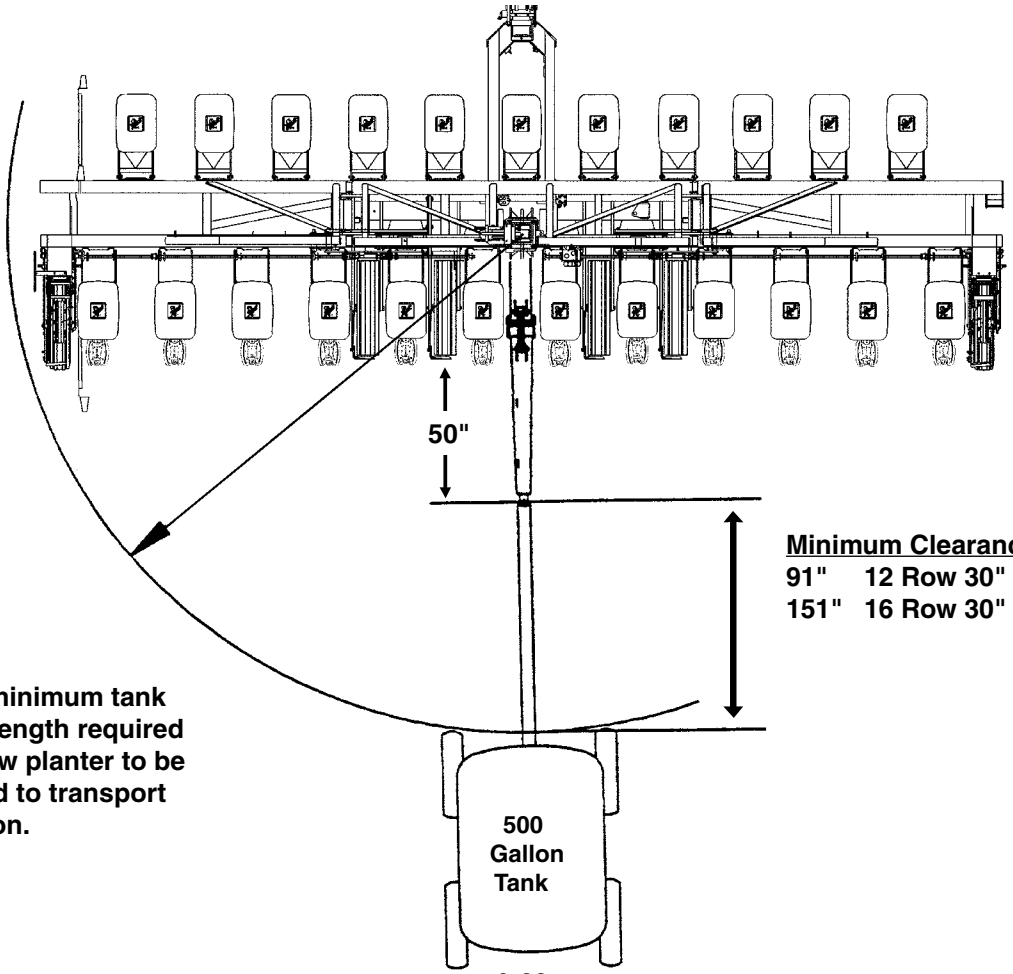

Note minimum tank hitch length required to allow planter to be rotated to transport position.

TRANSPORTING THE PLANTER

WARNING: Always make sure safety/ warning lights, reflective decals and SMV sign are in place and visible prior to transporting the machine on public roads. In this regard, check federal, state/provincial and local regulations.

IMPORTANT: Avoid transporting planter with hoppers loaded whenever possible. When it is necessary to transport the planter with the hoppers loaded, the added weight should be distributed evenly on the planter frame before rotating the planter.

WARNING: Install safety lockup devices before transporting the planter.

HALL EFFECT SENSOR

Hall Effect sensor should be set within ⅛" of pick-up disc.

D05010806

METRIC CONVERSION TABLE

MULTIPLY	BY	TO GET
Inches (in.)	x 2.54	= centimeters (cm)
Inches (in.)	x 25.4	= millimeters (mm)
Feet (ft.)	x 30.48	= centimeters (cm)
Acres	x 0.405	= hectares (ha)
Miles per hour (mph)	x 1.609	= kilometers per hour (Km/h)
Pounds (lbs.)	x 0.453	= kilograms (kg)
Bushels (bu.)	x 35.238	= liters (l)
Gallons (gal.)	x 3.785	= liters (l)
Pounds per square inch (psi)	x 6.894	= kilopascals (kPa) (100 kPa = 1 bar)
Inch pounds (in. lbs.)	x 0.113	= newtons-meters (N•m)
Foot pounds (ft. lbs.)	x 1.356	= newtons-meters (N•m)
Centimeters (cm)	x .394	= inches (in.)
Millimeters (mm)	x .0394	= inches (in.)
Centimeters (cm)	x .0328	= feet (ft.)
Hectares (ha)	x 2.469	= acres
Kilometers per hour (Km/h)	x 0.621	= miles per hour (mph)
Kilograms (kg)	x 2.208	= pounds (lbs.)
Liters (l)	x 0.028	= bushels (bu.)
Liters (l)	x 0.264	= gallons (gal.)
Kilopascals (kPa) (100 kPa = 1 bar)	x 0.145	= pounds per square inch (psi)
Newtons-meters (N•m)	x 8.85	= inch pounds (in. lbs.)
Newtons-meters (N•m)	x 0.738	= foot pounds (ft. lbs.)

PLANTING SPEED

Planters are designed to operate within a speed range of 2 to 8 MPH. See "Planting And Application Rate Charts". Variations in ground speed will produce variations in rates. Finger pickup seed meter populations will tend to be disproportionately higher at high ground speeds.

NOTE: Due to a multitude of variables, seed spacing can be adversely affected at speeds above 5.5 MPH.

FIELD TEST

With any change of field and/or planting conditions, seed size or planter adjustment, we recommend a field test be made to ensure proper seed placement and operation of row units. See "Rate Charts", "Checking Seed Population" at end of this section.

- ❑ Check the planter for fore to aft and lateral level operation. See "Leveling The Planter"
- ❑ Check **all** row units to be certain they are running level. When planting, the row unit parallel arms should be approximately parallel to the ground.
- ❑ Check row markers for proper operation and adjustment. See "Row Marker Length Adjustment", "Row Marker Speed Adjustment" and "Row Marker Operation".
- ❑ Check for desired depth placement and seed population on **all** rows. See "Checking Seed Population".
- ❑ Check for proper application rates of fertilizer on **all** rows. See proper "Fertilizer Application Rate Chart".

After the planter has been field tested, reinspect the machine.

- ❑ Hoses And Fittings
- ❑ Bolts And Nuts
- ❑ Cotter Pins And Spring Pins
- ❑ Drive Chain Alignment

CHECKING SEED POPULATION

1. Tie up one or more sets of closing wheels by running a chain or rubber tarp strap between the hopper support panel and closing wheels. It may be necessary to decrease closing wheel arm spring tension.

(RU113g)

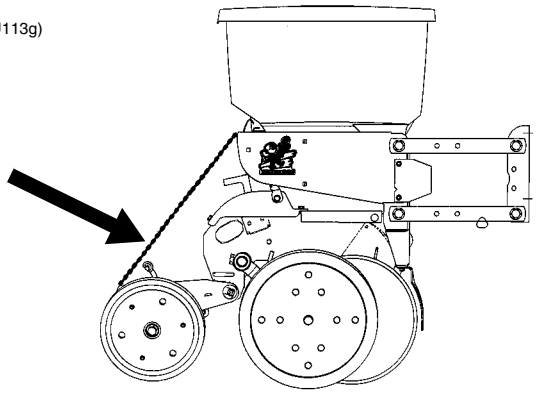

2. Plant a short distance and check to see if seed is visible in the seed trench. Adjust planting depth to a shallower setting if seed is not visible and recheck.

D020705102

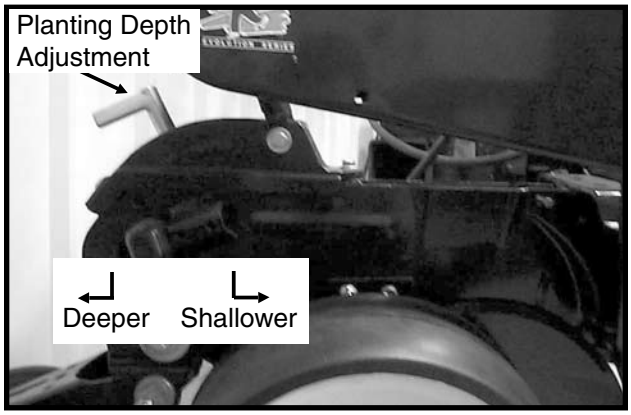

3. Measure 1/1000 of an acre. See chart for correct distance for row width being planted. For example, if planting 30" rows 1/1000 of an acre would be 17' 5".

LENGTH OF ROW IN FEET AND INCHES						
Fraction	Row Width					
Of Acre	15"	18"	19"	30"	36"	38"
1/1000	34' 10"	29' 0"	27' 8"	17' 5"	14' 6"	13' 10"

NOTE: When planting with closing wheels raised and planting depth set shallow, seeds may bounce or roll affecting seed spacing accuracy.

4. Count seeds in measured distance.

5. Multiply the number of seeds placed in 1/1000 of an acre by 1000. This will give you total population.

EXAMPLE: With 30" row spacing 17' 5" equals 1/1000 acre.

26 Seeds Counted	x	1000	=	26,000 Seeds Per Acre

Seed count can be affected by drive ratio between drive wheel and seed meter, tire pressure and/or seed meter malfunction.

If seed check shows the average distance between seeds in inches is significantly different than the seed rate chart indicates.

Check for seed meter malfunction. For example, if spacing between kernels of corn at the transmission setting being used is 8" and a gap of 16" is observed, a finger has lost its seed and not functioned properly. If two seeds are found within a short distance of each other, the finger has metered two seeds instead of one.

See “Finger Pickup Seed Meter Troubleshooting” and/or “Brush-Type Seed Meter Troubleshooting” in the Maintenance Section of this manual.

Determining Pounds Per Acre (Brush-Type Seed Meter)

To determine pounds per acre:

Seeds Per Acre On Chart	÷	Seeds Per Pound From Seed Tag On Bag	=	Pounds Per Acre

To determine bushels per acre:

Pounds Per Acre	÷	Unit Weight Of Seed	=	Bushels Per Acre

The unit weight of:
- 1 Bushel Soybeans = 60 Pounds
- 1 Bushel Milo/Grain Sorghum = 56 Pounds
- 1 Bushel Cotton = 32 Pounds

If seeds per pound information is not available the following is an average:
- 2,600 seeds per pound for medium size soybeans
- 15,000 seeds per pound for medium size milo/grain sorghum
- 4,500 seeds per pound for medium size cotton

If seed population check shows planting rate is significantly different than seed rate chart shows or if a particular meter is not planting accurately, see “Brush-Type Seed Meter Maintenance” and “Brush-Type Seed Meter Troubleshooting”.

GENERAL PLANTING RATE INFORMATION

These planting rate charts are applicable to KINZE® Model 3600 Twin-Line® Planters. See “Tire Pressure” for recommended tire pressures.

The size and shape of seed may affect the planting rate.

Finger Pickup Corn Meter
Larger grades will generally plant more accurately at the high end of the ground speed range than smaller grades. Higher than optimum speeds may result in population rate increase or higher incidence of doubles, particularly with small seed. Medium round corn seed is most desirable for planting accuracy at optimum speed.

Finger Pickup Oil Sunflower Meter
Larger grades will generally plant more accurately at the high end of the ground speed range than smaller grades. Higher than optimum speeds may result in population rate increase or higher incidence of doubles, particularly with small seed. No. 3 and/or No. 4 size oil sunflower seeds are recommended for use in the finger pickup seed meter equipped with oil sunflower fingers. No. 1 and/or No. 2 size confectionery sunflower seeds are recommended for use in the finger pickup seed meter equipped with corn fingers.

NOTE: Seed additives, added to the seed in the hopper, may adversely affect performance of the finger pickup seed meter and accelerate wear. See “Finger Pickup Seed Meter” in the Row Unit Operation section.

Brush-Type Seed Meter (Soybean, Milo/Grain Sorghum, Acid-Delinted Cotton)
Rate charts are given in seeds per acre as well as seed spacing in inches rounded to the nearest tenth of an inch. Because of the large range in seed size, pounds per acre is not a suggested method of selecting transmission settings. When using smaller size seeds it may appear the pounds per acre is below what was expected and vice versa on large seed. To determine pounds per acre, use the formula given in “Determining Pounds Per Acre (Brush-Type Seed Meter)” in the “Checking Seed Population” section of this manual.

NOTE: Due to a multitude of variables, seed spacing can be adversely affected at speeds above 5.5 MPH.

LIQUID FERTILIZER PISTON PUMP APPLICATION RATES GALLONS PER ACRE

Applies To Model NGP-7055 Pumps With 18 Tooth Sprocket And 7.60" x 15" Ground Drive Tire

Pump Setting	1	2	3	4	5	6	7	8	9	10
12 Row 30"	3.7	7.4	11.1	14.8	18.5	22.1	25.8	29.5	33.2	36.9
16 Row 30"	2.8	5.5	8.3	11.1	13.9	16.6	19.4	22.2	24.9	27.7

The chart above is for planters equipped with 7.60" x 15" ground drive tire, based on 91" forward travel per wheel revolution, 48 tooth drive sprocket and 18 tooth driven sprocket on metering pump. See "Tire Pressure" for recommended tire pressures. Charts are based on average wheel slippage and liquid viscosities.

Measure and weigh one gallon of actual fertilizer solution to determine exact application rate. This chart was calculated based on a solution weighing ten pounds per gallon.

NOTE: Fertilizer application rates can vary from the above chart. To prevent application miscalculations, make field checks to be sure you are applying fertilizer to all rows at the desired rate.

NOTE: Flow to all rows should be checked periodically. If one or more lines are plugged, the desired rate will be delivered to the remaining rows keeping total application rate at desired rate.

To check the exact number of gallons your fertilizer attachment will actually deliver on a 30" row spacing, proceed as follows:

Remove the hose from one of the fertilizer openers and insert it into a collection container which has been secured to the planter frame. Engage the fertilizer attachment and drive forward for 174'. Measure the fluid ounces caught in the container and multiply that amount by 100. Divide that amount by 128. The result will be the gallons of fertilizer delivered per acre when planting in 30" rows. Rinse the collection container and repeat test on other rows if necessary.

ROW UNIT OPERATION

PLANTING DEPTH

Planting depth is maintained by the row unit gauge wheels. To increase or decrease the planting depth, first raise the planter to remove weight from the wheels. Then push down on the depth adjustment handle and reposition it forward to decrease depth or rearward to increase planting depth. Adjust all units to the same setting initially. Then lower the planter and check operation and planting depth of all row units. It may be necessary to readjust some rows to obtain uniform operation. Available depth adjustment range is approximately ½" to 3 ½".

WARNING: Never work under the planter while in raised position without using safety lockup devices.

D020705102

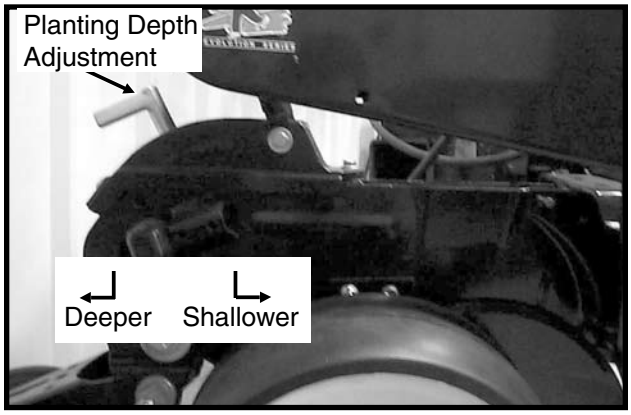

"V" CLOSING WHEEL ADJUSTMENT (Rubber And Cast Iron)

WARNING: Raise planter and install safety lockup devices before making closing wheel adjustments.

After adjusting planting depth, check the operation of the "V" closing wheels. The "V" closing wheels should have enough down pressure to close the seed trench and ensure good soil to seed contact. To increase spring pressure on the closing wheels, move the 5-position quick adjustable down force lever located on the top of the closing wheel arm to the rear. Moving the lever forward decreases spring tension.

Adjust all row units to a similar setting.

LF212299-15

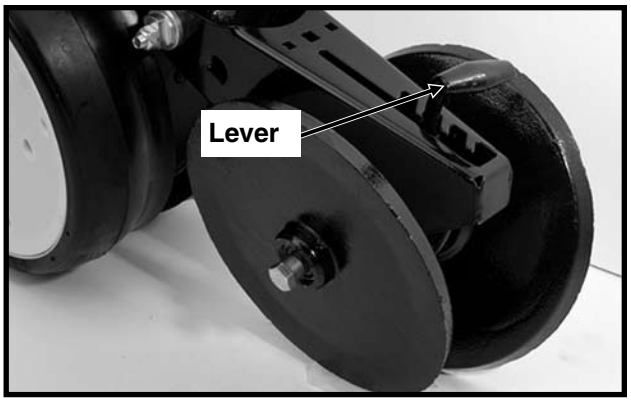

Light soil usually requires less down force at average depth (approximately 2") while heavy soil requires increased down force.

Eccentric bushings in the wheel arm stop allow for lateral adjustment of the "V" closing wheel assembly. Using a ¾" wrench, loosen the hardware which attaches the closing wheel arm to the wheel arm stop. Using another ¾" wrench turn the eccentric bushings until the **closing wheels are aligned with the seed trench**. Tighten hardware.

LF2122299-15

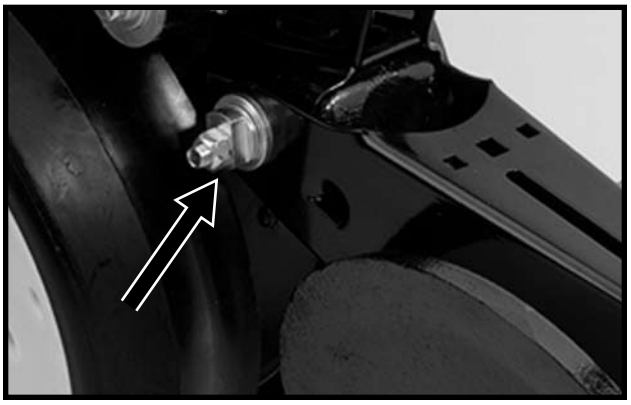

The closing wheels can be installed in two locations either "offset" (to improve residue flow) or "directly" opposite. If set "directly" opposite, the forward installation holes should be used.

(RU83k)

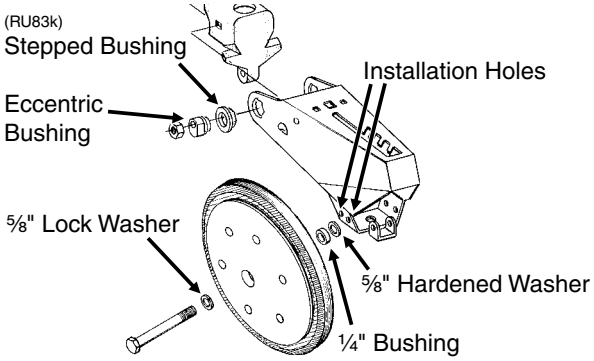

CLOSING WHEEL SHIELD
(Rubber And Cast Iron "V" Closing Wheels)

D11090208a

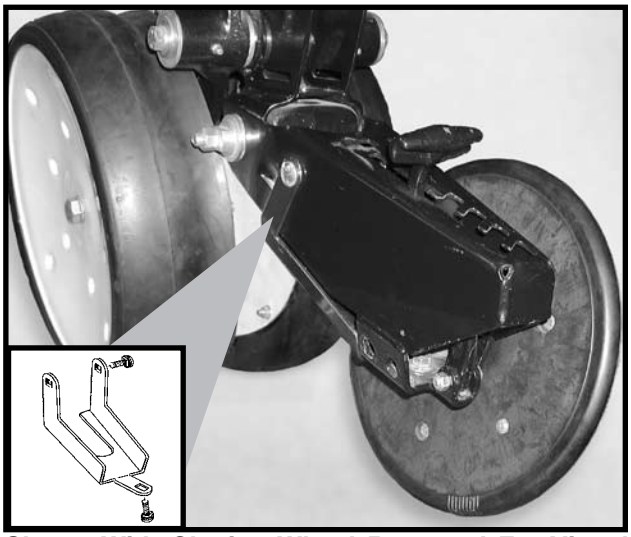

Shown With Closing Wheel Removed For Visual Clarity

The optional closing wheel shield is designed to be installed onto the underside of the closing wheel arm to help prevent root balls and stalks from plugging the closing wheels.

COVERING DISCS/SINGLE PRESS WHEEL ADJUSTMENT

WARNING: Raise planter and install safety lockup devices before making covering discs/single press wheel adjustments.

72359-31

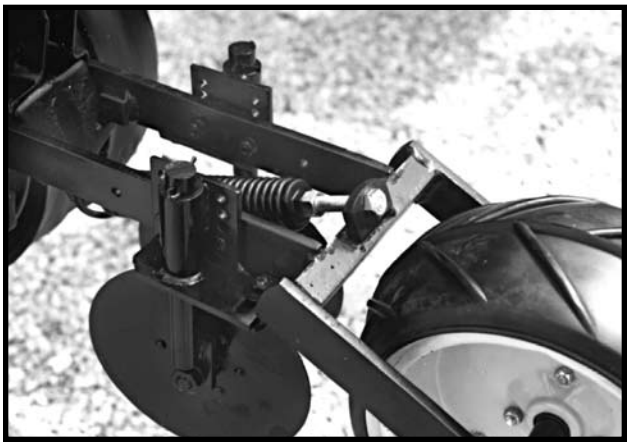

After adjusting planting depth, check the operation of the covering discs/single press wheels.

Initial press wheel down force setting should be with 2 ½" between mounting arm tab and locking nut. To adjust down force spring, loosen ½" locking nut and turn adjusting bolt in to increase down force or out to decrease down force. Tighten locking nut against spring plug. Adjust all row units to a similar setting.

RH993(PLTR12)

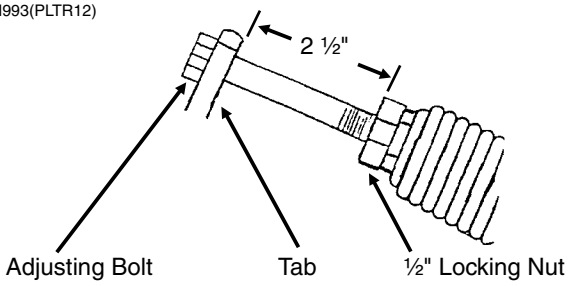

Eccentric bushings in the wheel arm stop allow for lateral adjustment of the covering discs/single press wheel assembly. Using a ¾" wrench, loosen the hardware which attaches the assembly to the wheel arm stop. Using another ¾" wrench, turn the eccentric bushings until the press wheel is aligned with the seed trench.

(RU94b)

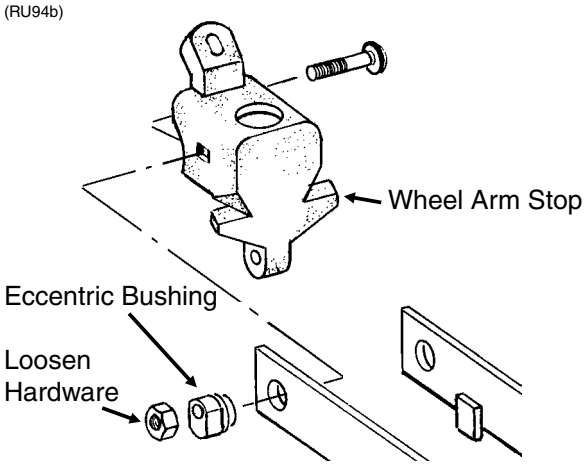

Two sets of holes in the mounting arm allow the covering discs to be located for staggered or side-by-side operation as desired.

72359-35

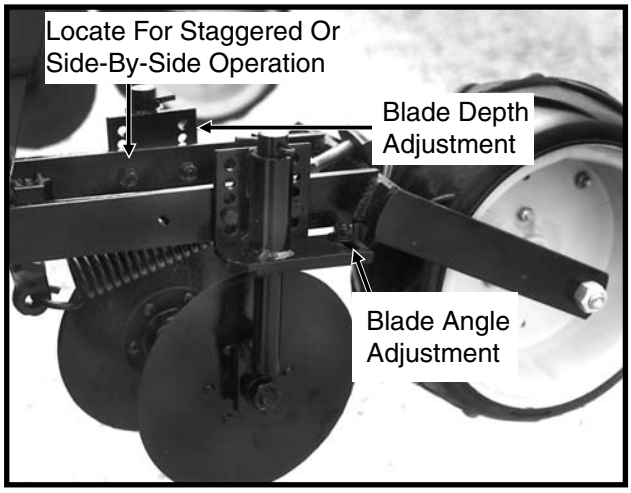

Five sets of holes in each disc bracket allow for ½" incremental blade depth adjustment.

Slotted holes in the disc mount and bracket allow for 0° - 15° blade angle adjustment.

Adjust covering discs on all row units to similar settings.

DRAG CLOSING ATTACHMENT

LF212299-18

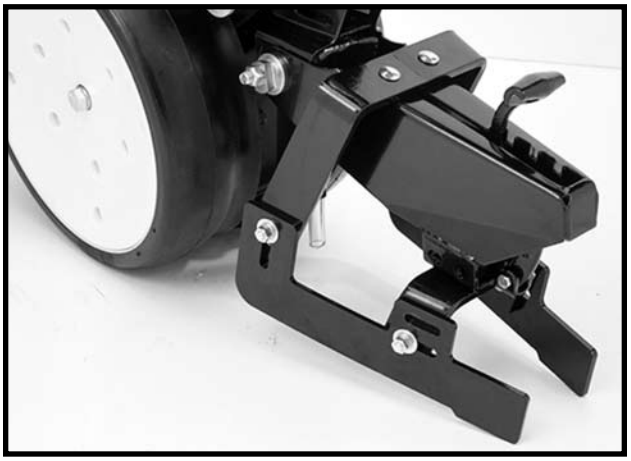

The drag closing attachment is designed to pull loose soil over the seed trench.

Front and rear adjustment is made using the slotted holes in the blades. Adjust all rows the same.

NOTE: Use of a seed firming wheel or other seed firming device is recommended with the drag closing attachment.

WARNING: Raise planter and install safety lockup devices before making drag closing attachment adjustments.

(RU90d)

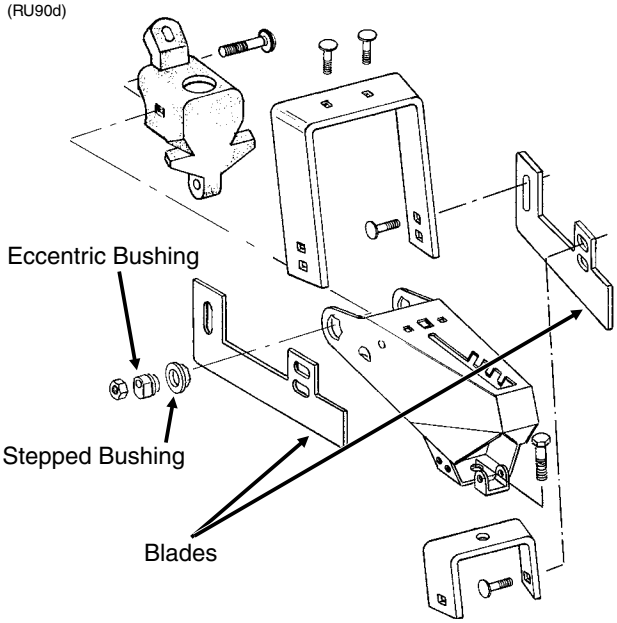

Eccentric bushings allow for lateral adjustment of the drag closing attachment. Using a ¾" wrench, loosen the hardware which attaches the assembly to the wheel arm stop. Using another ¾" wrench, turn the eccentric bushings until the drag closing attachment is aligned with the seed trench.

FINGER PICKUP SEED METER

Refer to the planting rate chart for recommended seed drive transmission sprocket combinations.

D12220401

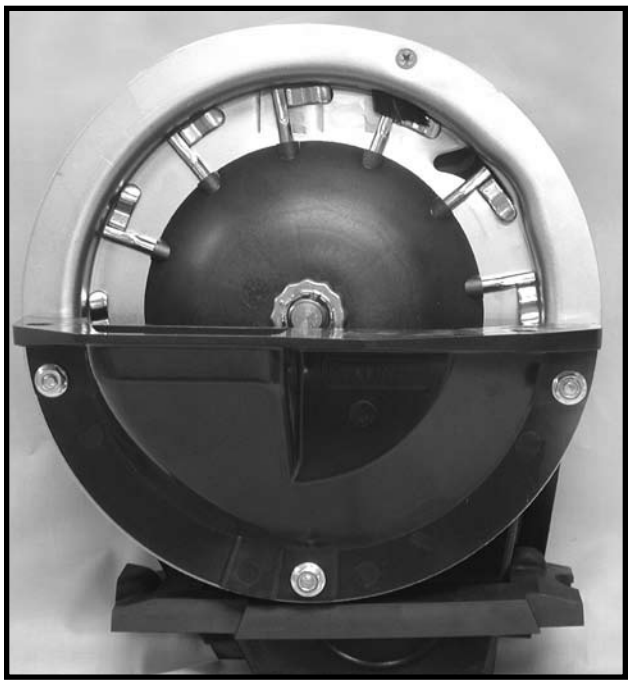

Shown With Corn Fingers Installed

The following seed fingers are available for use with the finger pickup seed meter:

(PLTR91/PLTR92/PLTR91a)

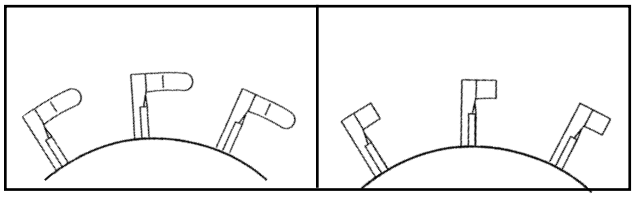

Corn Fingers **Oil Sunflower Fingers**

No. 3 and/or No. 4 size oil sunflower seeds are recommended for use in the finger pickup seed meter equipped with oil sunflower fingers.

No. 1 and/or No. 2 size confectionery sunflower seeds are recommended for use in the finger pickup seed meter equipped with corn fingers.

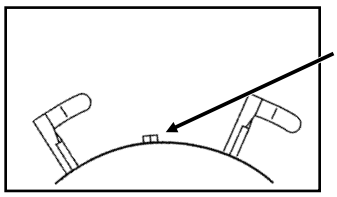

Half Rate Blank Finger

Blank fingers are used to replace alternate fingers in the finger wheel to reduce the planting rate by half while allowing the finger wheel to maintain a minimum of 40 RPM when planting low rates.

NOTE: Always check seed population in the field to ensure planting rates are correct.

NOTE: Powdered graphite is recommended for finger pickup seed meter lubrication to ensure efficient operation of the mechanism and to extend the life of its components. Mix one teaspoon of powdered graphite with the seed twice daily. Apply graphite on top of seed around the outer perimeter of the hopper as shown below. Graphite application frequency and volume may need to be increased if using additional seed treatments.

NOTE: Do NOT apply graphite only in the center of the hopper. It will filter too quickly through the seed and not distribute as evenly as desired.

D05230121b

NOTE: Follow manufacturer's recommendations when applying and mixing other seed treatments. If the additive is to be applied on top of the seed, apply around the outer perimeter of the hopper as with graphite.

See "General Planting Rate Information", "Finger Pickup Seed Meter Troubleshooting" and "Finger Pickup Seed Meter Inspection/Adjustment" for additional information.

CLEANOUT

To maintain genetic purity, thorough seed meter cleanout is important.

To clean the seed meter, disengage the seed drive and remove the seed hopper and meter. Dump the seed from the right rear corner of the hopper into a container. Turn the seed drive several times. Invert hopper to dump seed again. Shake the hopper and listen for any remaining seed. Turn seed drive and shake and dump hopper until all seed is removed.

BRUSH-TYPE SEED METER

D12220403

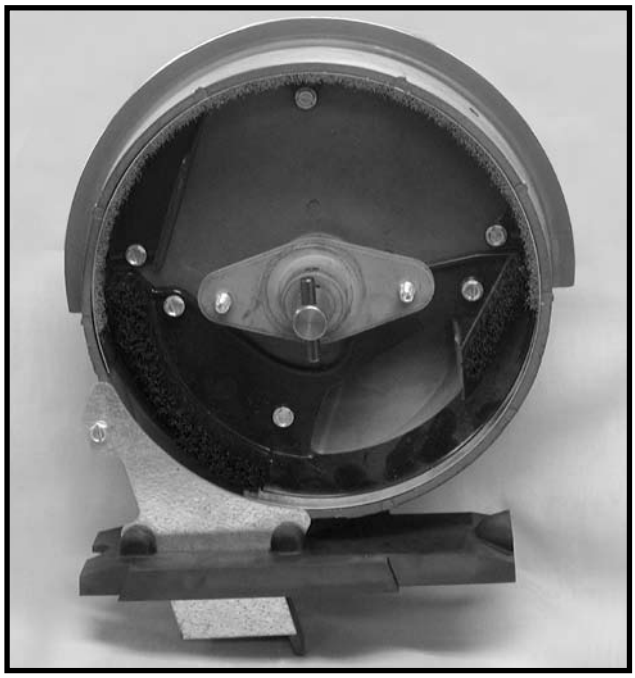

Shown Without Seed Disc Installed

60607-40a(PLTR13)

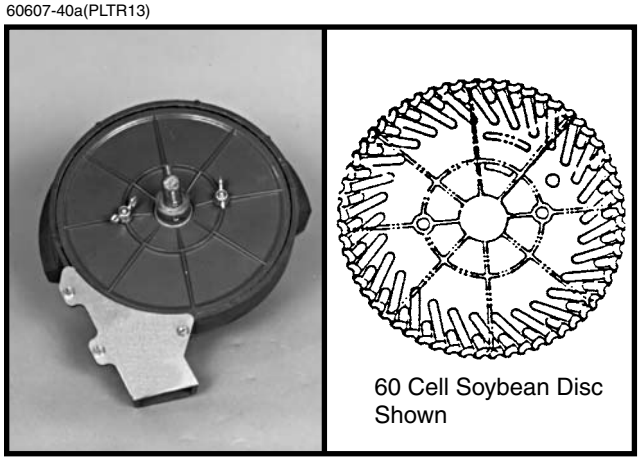

The following seed discs are available for use with the brush-type seed meter:

Soybean: *60 cells to meter seed sizes from 2200 to 4000 seeds per pound (Black color-coded).* (PLTR14)

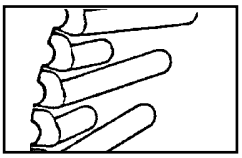

Specialty soybean: *48 cells to meter seed sizes from 1400 to 2200 seeds per pound (Dark blue color-coded).* (PLTR15)

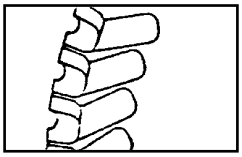

Small milo/grain sorghum: *30 cells to meter seed sizes from 14,000 to 20,000 seeds per pound (Red color-coded).* (PLTR16)

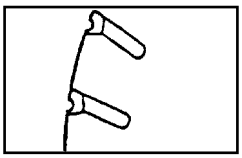

Large milo/grain sorghum: *30 cells to meter seed sizes from 10,000 to 16,000 seeds per pound (Light blue color-coded).* (PLTR17)

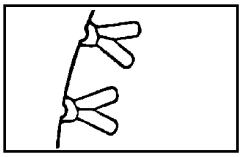

High-rate small milo/grain sorghum: *60 cells to meter seed sizes from 12,000 to 18,000 seeds per pound (Red color-coded).* (PLTR18)

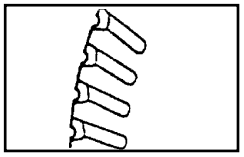

High-rate large milo/grain sorghum: *60 cells to meter seed sizes from 10,000 to 14,000 seeds per pound (Yellow color-coded).* (PLTR19)

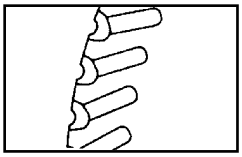

Cotton, acid-delinted: *30 cells to meter seed sizes from 4200 to 5200 seeds per pound (White color-coded).* (PLTR20)

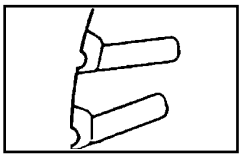

Large cotton, acid-delinted: *36 cells to meter seed sizes from 3800 to 4400 seeds per pound (Tan color-coded).* (PLTR21)

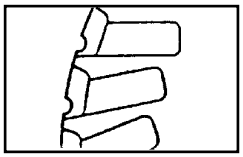

High-rate cotton, acid-delinted: *48 cells to meter seed sizes from 4200 to 5200 seeds per pound (Light green color-coded).* (PLTR22)

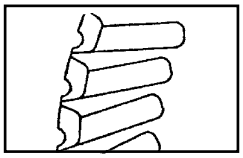

Hill-drop cotton, acid-delinted: *12 cells, 3 to 6 seeds/cell, to meter seed sizes from 4000 to 5200 seeds per pound (Brown color-coded).* (PLTR23)

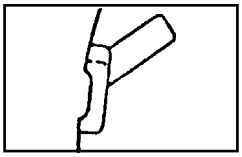

Small hill-drop cotton, acid-delinted: *12 cells, 3 to 6 seeds/cell, to meter seed sizes from 5000 to 6200 seeds per pound (Dark green color-coded).* (PLTR23)

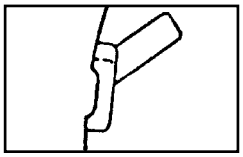

(RU14c)

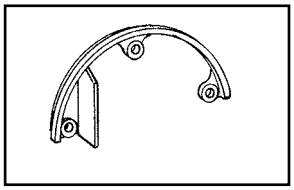

Use GD11122 upper brush retainer when using soybean and cotton discs.

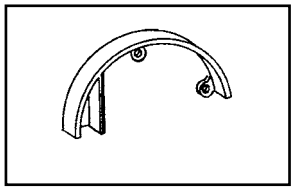

Use GD8237 upper brush retainer when using milo/grain sorghum discs.

When installing the seed disc onto the meter hub, turn the disc counterclockwise while tightening the two wing nuts that retain the disc. The seed disc should have only slight resistance when rotated counterclockwise after wing nuts are tight.

The brush-type seed meter attaches to the seed hopper in the same manner as the finger pickup seed meter. Secure to bottom of seed hopper with two 5⁄16" thumbscrews. Tighten thumbscrews slightly with pliers. DO NOT OVER TIGHTEN.

Erratic seed spacing may result from misalignment between the drive coupler and seed meter input shaft. Misalignment may cause momentary stoppage of seed disc. Check alignment after initial installation. If adjustment is required, refer to "Meter Drive Adjustment" for correct procedure.

Refer to the planting rate charts in this manual for recommended seed drive transmission sprocket combinations.

One tablespoon of **powdered graphite** should be mixed with the seed each time the hoppers are filled. Regular graphite use will prolong the life of the brush-type seed meter components, improve seed spacing, and may reduce buildup of seed treatments. Apply graphite around the outer perimeter of the hopper as shown below.

D05300104b

NOTE: Do NOT apply graphite only in the center of the hopper. It will filter too quickly through the seed and not distribute as evenly as desired.

NOTE: Additional graphite or talc may be required to retard buildup of seed treatments on meter components. Frequency of monitor seed tube cleaning may be affected due to use of additional graphite or talc.

Talc seed lubricant may be used in lieu of or in addition to graphite to reduce seed treatment buildup on seed disc and meter components. Coat seed disc and brushes with talc before installing meter. Fill hopper ½ full of seed, add ¼ cup of talc and **mix thoroughly**. Finish filling hopper, add another ¼ cup of talc and **mix thoroughly**. Adjust rate of talc use as needed so all seeds are coated, while avoiding a buildup of talc in the bottom of the hopper. Humid conditions and/or small sized seeds with extra seed treatment may require as much as one cup of talc per hopper to prevent seed treatment buildup on seed disc and/or brushes.

NOTE: Some liquid seed treatments or inoculants may create buildup on the seed disc or brushes. Check frequently for proper population and/or seed delivery when using any liquid seed treatment. All seed treatment should be thoroughly mixed with the seed per the manufacturers' recommendations. Seed treatment dumped on top of the seed after the hopper is filled, and not mixed properly may cause bridging of the seed in the meter, reducing population or stopping the meter from planting.

NOTE: Foreign material, such as hulls, stems, etc., may affect seed delivery. Clean seed is required to ensure accurate seed metering from the brush-type seed meter. Seed discs should be removed daily to check for buildup of foreign material, such as hulls, in the seed meter or the brushes.

CLEANOUT

To maintain genetic purity, thorough seed meter cleanout is important.

To clean the seed meter, disengage the seed drive and remove the seed hopper and meter. Dump the seed from the right rear corner of the hopper into a container. Disassemble seed disc by removing wing nuts. Empty the meter. Thoroughly inspect brushes in meter to ensure all seed is removed. Replace seed disc and install wing nuts.

SEED HOPPER

LF212199-7a

The seed hopper has a capacity of 1.9 bushels.

When filling the seed hopper use clean seed and make certain there are no foreign objects in the hopper. **Replace hopper lids after hoppers are filled to prevent the accumulation of dust or dirt in the seed meter which will cause premature wear.** See “Finger Pickup Seed Meter” and/or “Brush-Type Seed Meter”.

Periodically empty the hoppers completely to remove any foreign materials and to ensure proper seed meter operation. To empty hopper, disengage meter drive and hopper latch and lift hopper off the hopper support. See “Seed Meter Drive Release”.

SEED METER DRIVE RELEASE

The seed meter drive is equipped with a clutch release mechanism that allows the drive to be disengaged from the seed metering unit for removal of the seed hopper. Disconnecting the drive allows the operator to check granular chemical application rates without dropping seed. It also allows one or more of the rows to be disconnected when finishing fields.

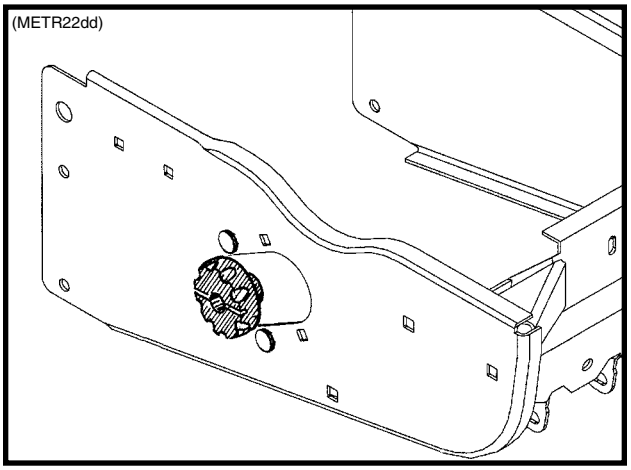

To disengage the drive, turn the knob ¼ turn counter-clockwise. To engage the drive, turn the knob ¼ turn clockwise.

ROW UNIT EXTENSION BRACKETS

(RU145)

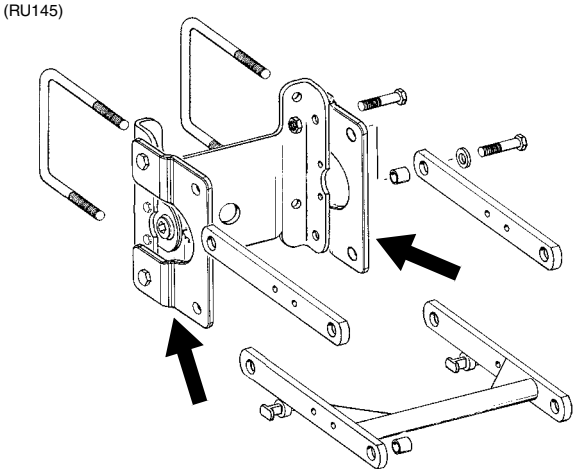

Row unit extension brackets are required on the 4 center pull row units if the Model 3600V planter is equipped with coulter mounted residue wheels. The brackets extend the row units rearward 4" to provide required clearance.

QUICK ADJUSTABLE DOWN FORCE SPRINGS OPTION

Quick adjustable down force springs are designed to increase penetration in hard soil and keep the row unit from bouncing in rough field conditions.

Two springs per row, one on the L.H. parallel arms and one on the R.H. parallel arms, are used unless equipped with row unit mounted no till coulters. Four springs per row are used with row unit mounted no till coulters.

D06300305

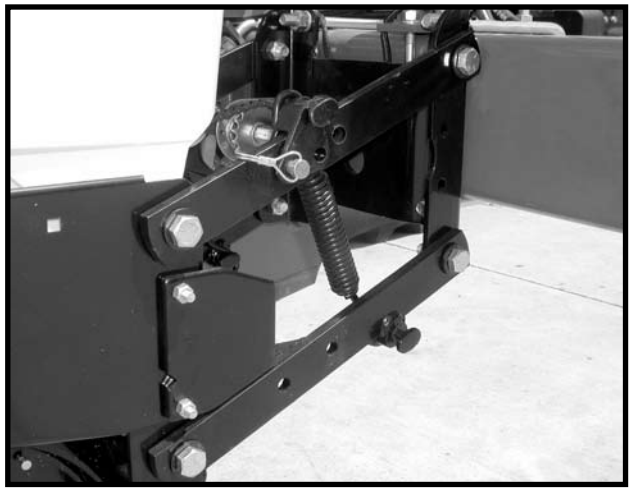

Two Springs Per Row (Dual)

D07010301

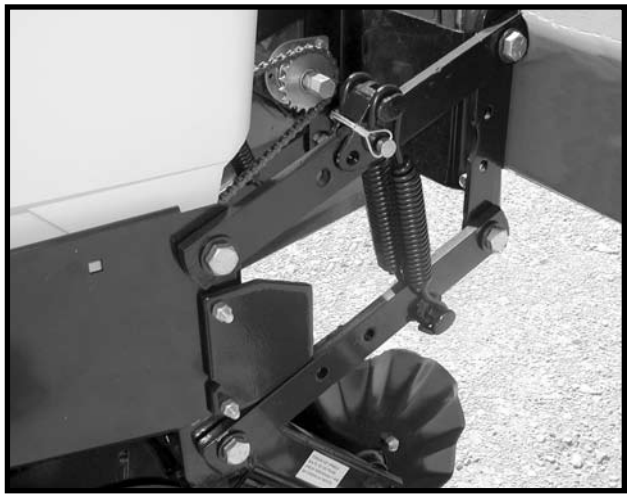

Four Springs Per Row (Quad)
(Used Only In Conjunction With Row Unit Mounted No Till Coulters)

NOTE: Four springs per row are to be used with row unit mounted no till coulters only.

There are four positions for spring tension adjustment. Position 1 allows for minimum down pressure and position 4 for maximum down pressure.

L0096(PLTR27e)

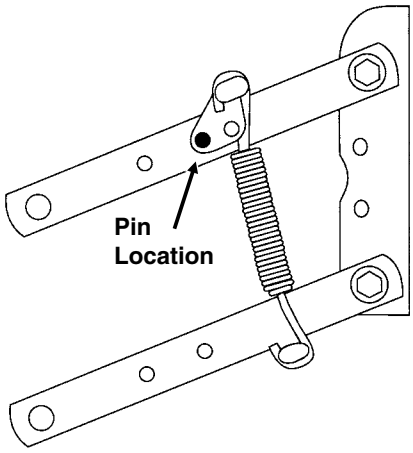

Position 1 (Minimum)

(PLTR28e)

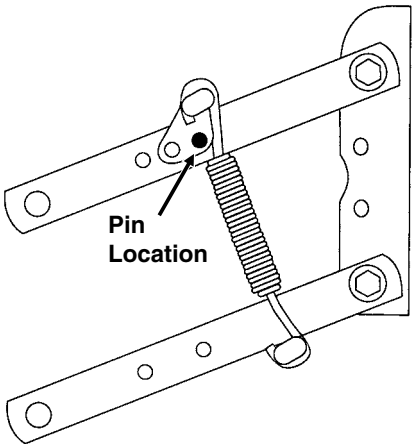

Position 2

(PLTR29e)

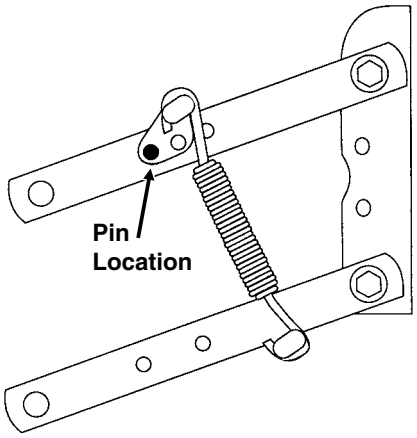

Position 3

(PLTR30e)

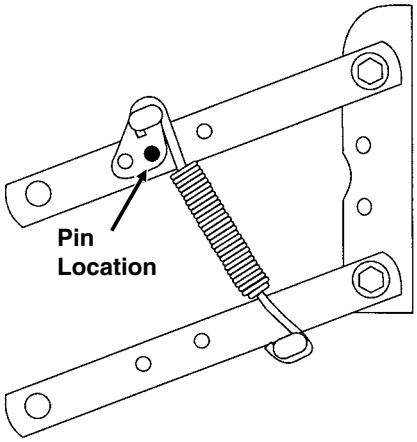

Position 4 (Maximum)

To adjust spring tension, raise planter and remove spring mount pin at top of spring. Slide mount to desired position and install pin.

NOTE: It is necessary for the operator to adjust springs according to field conditions. If springs are adjusted for too much down pressure for field conditions, it is possible for the row units to lift the planter to the extent that the drive wheels do not make sufficient contact. Too much down pressure in soft field conditions can cause the row unit to run too deep.

WARNING: Always install safety lockup devices or lower machine to the ground before working under or around the machine.

IMPORTANT: Springs must always be installed with open side of spring hooks toward seed hoppers to prevent binding on spring mount adjustment pins.

PNEUMATIC DOWN PRESSURE

With pneumatic down pressure option, the operator can vary row unit down pressure on-the-go as field conditions change. A cab-mounted digital readout displays down force (lbs.) applied. A planter-mounted 12 VDC air compressor, with 3 gallon capacity air tank, supplies air for the down pressure system.

Packages also include upper and lower air spring mounting castings for pull row units (fore and aft air spring mounting castings for push row units), 150 psi rated air springs, ⅜" O.D. nylon hoses, dual solenoid air valve and stainless steel, 160 psi, 2" liquid-filled gauge and planter wiring harness.

Pneumatic down pressure row unit extension brackets are required in some applications.

(PNE07)

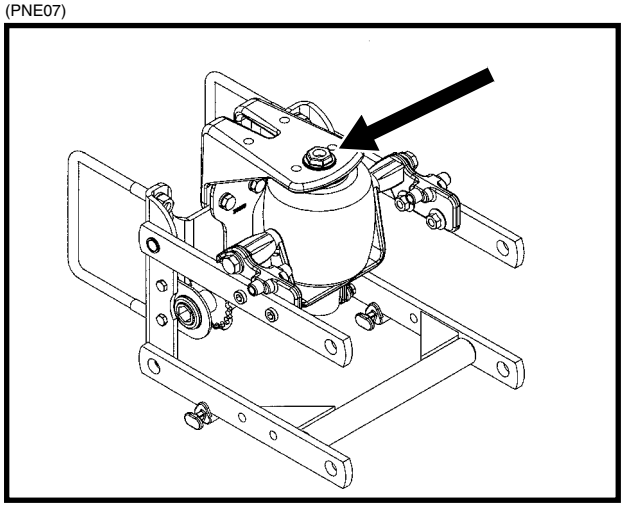

Pull Row Unit Air Spring

NOTE: Shoulder nut(s) should be torqued to 350 in. lbs. Refer to page 9-1 for additional torque values.

(PNE09)

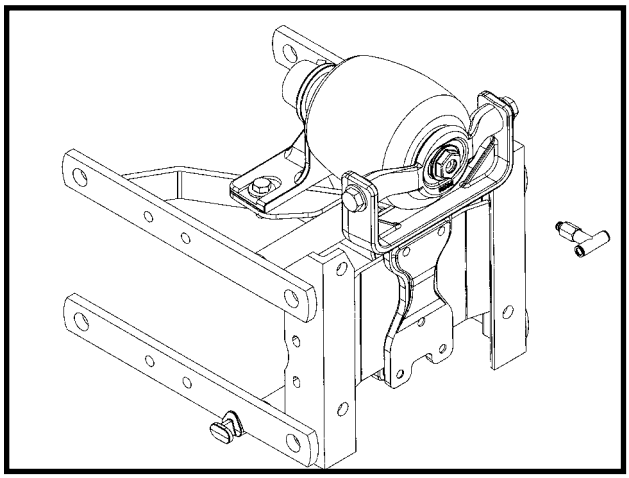

Push Row Unit Air Spring

(PNE01e)

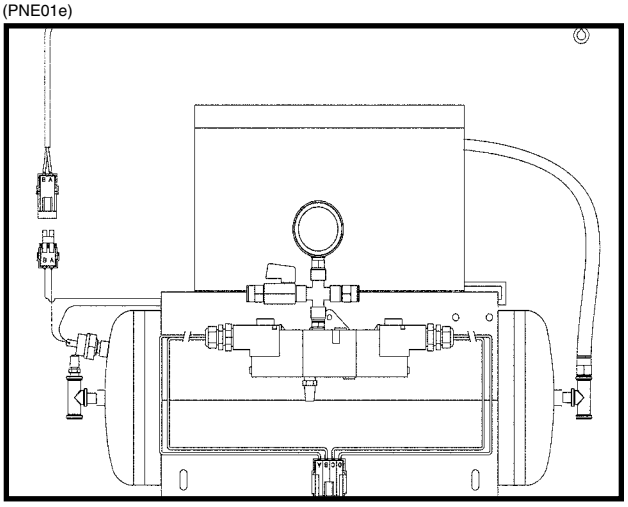

Air Compressor With Dual Solenoid Assembly

(A12813)

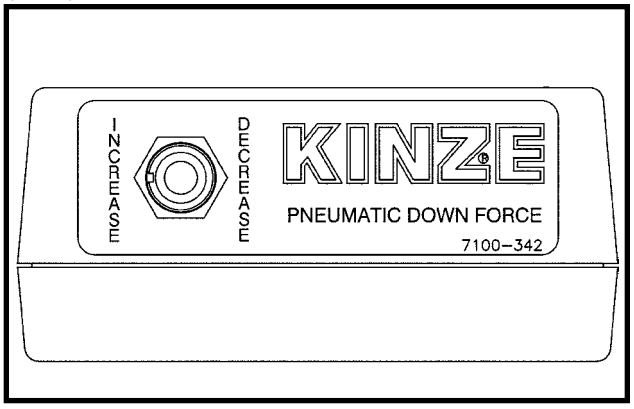

Control Box Assembly

FIELD OPERATION

NOTE: For the most accurate adjustment, adjust down pressure with planter lowered and row openers in the ground. Pressure can be adjusted from tractor using the control console, or at planter using the manual control valves.

(A12813)

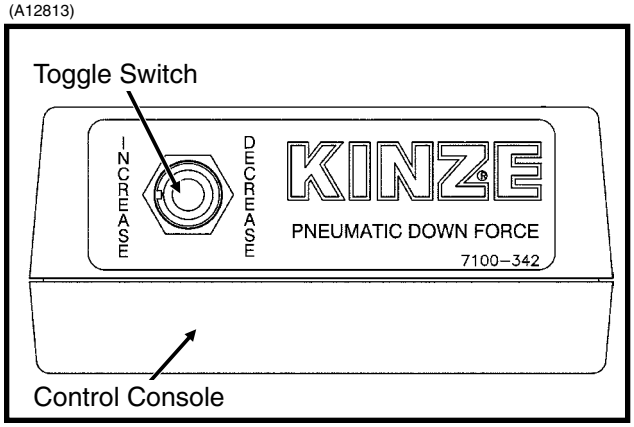

To adjust down pressure from cab:

To INCREASE pressure, push toggle switch left.

To DECREASE pressure, push toggle switch right.

To adjust down pressure from planter:

To INCREASE pressure, press and hold button on solenoid as shown below.

To DECREASE pressure, press and hold button on solenoid as shown below.

The readout value on the air pressure gauge is NOT the down pressure force value. To calculate the force value, multiply the air pressure (psi) by four (4).

D112907100

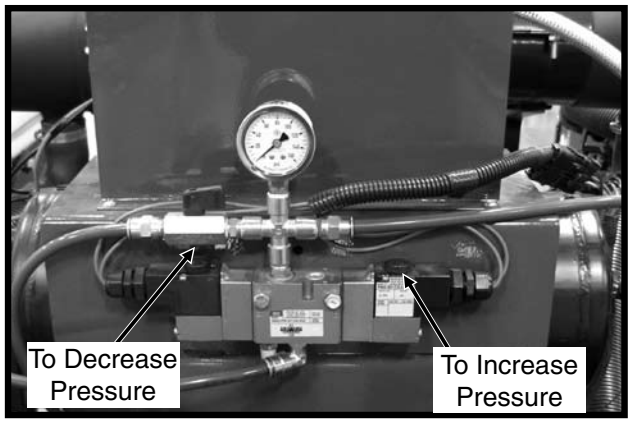

WARNING: Always install all safety lockup devices or lower planter to the ground before working under or around the machine.

D112907100

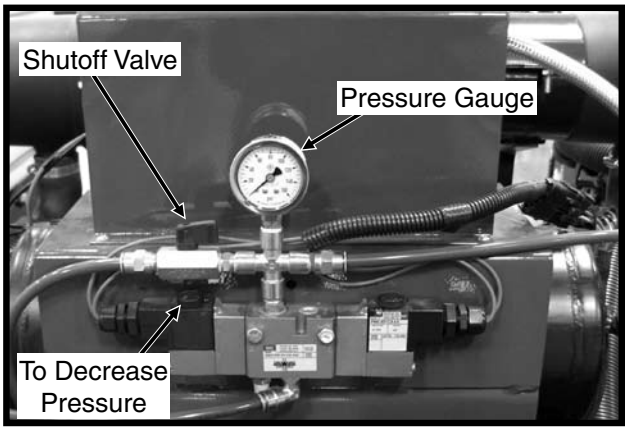

To lock up push row units equipped with pneumatic down pressure springs:

STEP 1 Disconnect electric power supply to compressor.

STEP 2 Press and hold button on solenoid until pressure gauge reads zero.

STEP 3 Lock up units. See “Interplant Push Unit Lockup” for instructions.

STEP 4 Turn the shutoff valve handle perpendicular to valve body. This turns off air supply to the push row units.

NOTE: If control console is ON and the hydraulic down force is not set to zero, compressor will start when electric power supply is reconnected.

STEP 5 Reconnect electric power supply to compressor.

FRAME MOUNTED COULTER

LF083002101

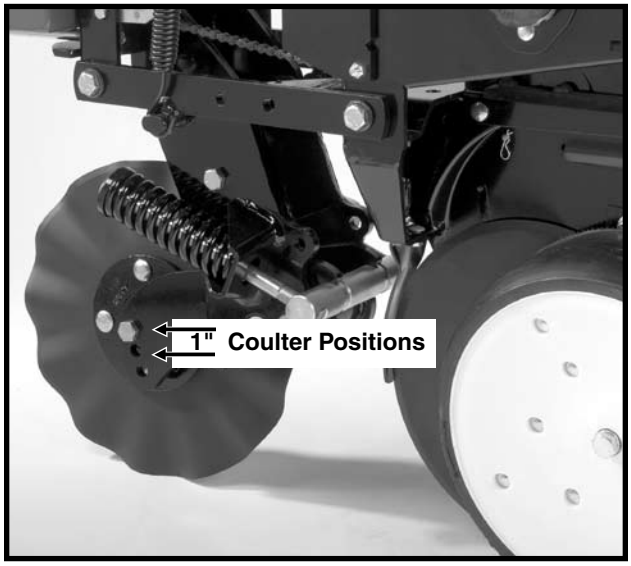

Frame mounted coulters with 1" bubbled, 1" fluted (8 flutes) or ¾" fluted (13 flutes) blades may be used on pull row units only. (Not compatible with push row units.)

The frame mounted coulter is designed to apply necessary spring down pressure on the coulter for maximum penetration while exerting less shock load on the row unit.

The initial location of the coulter blade is in the top hole. The blade can be relocated to one of the lower two holes (1" increments) as wear occurs or if deeper operation of the blade is desired.

LF083002101

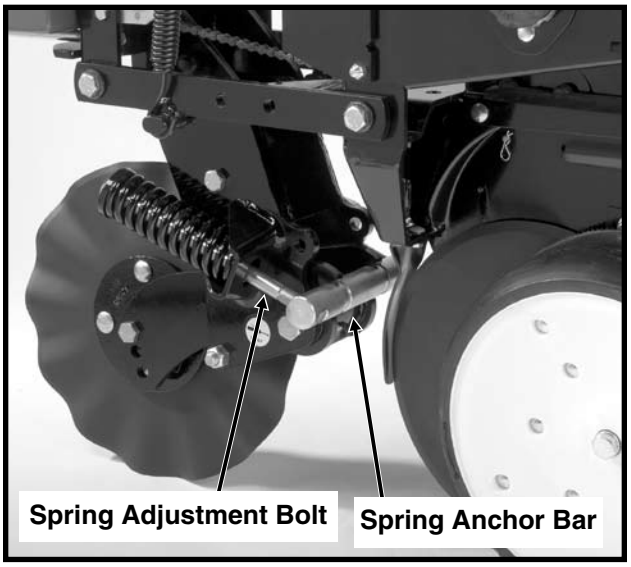

DOWN PRESSURE ADJUSTMENT

Down force adjustment is made by tightening or loosening the two spring adjustment bolts. With the planter in raised position, turn the bolts clockwise to increase down pressure or counterclockwise to decrease down force. Set both springs the same.

Down force on the blade is shown below in lbs.

End Of Spring Adjustment Bolt Flush With Spring Anchor Bar (Shown Above)	End Of Spring Adjustment Bolt Extended ½" Through Spring Anchor Bar	All Threads Used (Maximum)
275 lbs.	400 lbs.	500 lbs.

NOTE: Avoid setting down pressure higher than is required for consistent soil penetration. Excessive pressure will increase the chances of damage to coulter components when the coulter strikes an obstacle.

RESIDUE WHEELS
(For Use With Frame Mounted Coulter)

The residue wheels for use with the frame mounted coulter may be used on pull row units only.

LF083002102

STYLE A Shown

The residue wheels are attached to the frame mounted coulter with two cap screws and sleeves allowing the unit to free-float. A 2-position spindle bolt mounting allows the tined wheels to be mounted interlocked or staggered. Depth adjustment is made using a spring-loaded cam and pin with 11 positions in ¼" increments. A high point on the cam allows the wheels to be locked up so they do not contact the ground. A weed guard, located on the inboard side of each wheel, aids in the prevention of weed wrap which can cause premature bearing failure.

(RU135k)

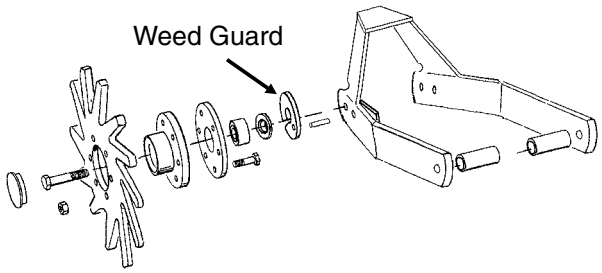

STYLE A

(RU135m)

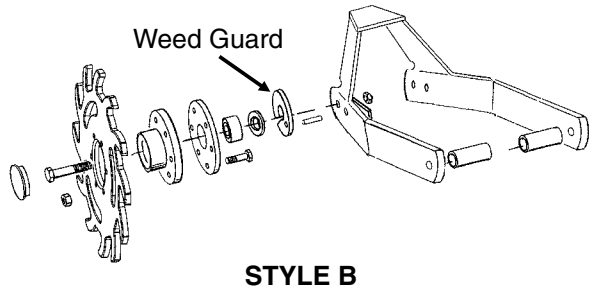

STYLE B

NOTE: Opening in weed guard must point down.

IMPORTANT: The forward mounting positions of the tined wheels can not be used on the four rows behind the axle on the 3600 machine due to inadequate clearance.

ROW UNIT MOUNTED DISC FURROWER

The row unit mounted disc furrower is for use on pull row units only (not compatible with Interplant® push row units). The disc furrower may be equipped with either 12" solid blades or 12" notched blades.

Disc furrowers are used to clear crop residue, dirt clods and dry soil from in front of the row units for a clean and smooth seed bed. Notched blades are used for heavier residue conditions. The notched blades cut crop residue and move it aside to prevent plugging or pushing.

LF212299-22

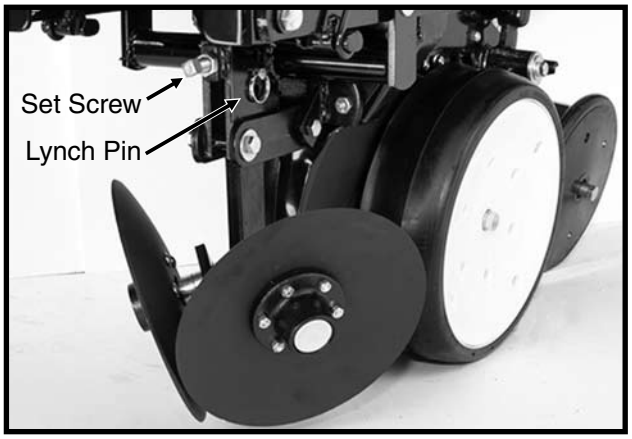

Vertical adjustment in ⅓" increments is possible by removing the lynch pin which secures the vertical support arm and moving the support arm up or down as required. Reinstall lynch pin. Finer adjustment can be attained by removing the lynch pin and using the ⅝" x 2 ¼" set screw to clamp the support arm in the required position.

(RU98e)

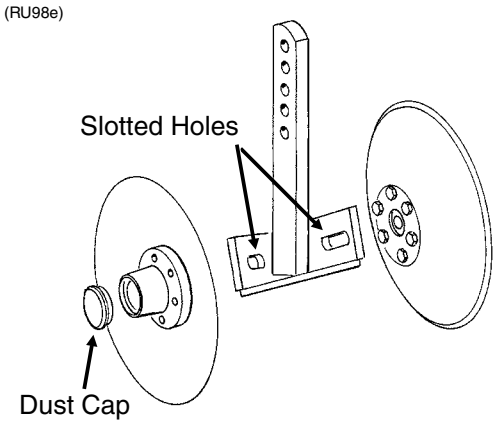

Slotted holes in the support arm where the blades are mounted allow fore and aft adjustment of the disc blades. Blades can be adjusted so the front edges meet or one blade can be moved to the rear and the other to the front of the slot so the cutting edge of one blade overlaps the edge of the other blade. The dust cap must be removed to make these adjustments.

ROW UNIT MOUNTED RESIDUE WHEEL

The row unit mounted residue wheel may be used on pull row units and push row units.

D101701113

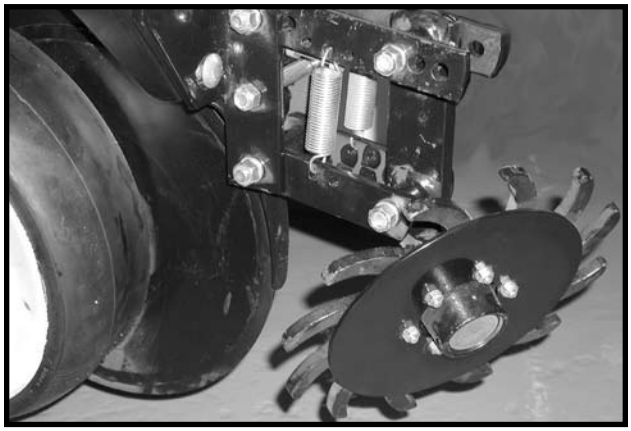

STYLE A

(A12685)

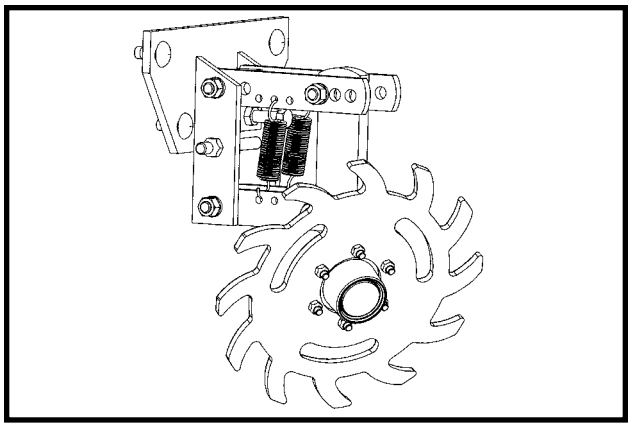

STYLE B

Two adjustable springs on the parallel links on each residue wheel allow for down force adjustment. Position 1 as shown below provides minimum down pressure and position 3 maximum down pressure.

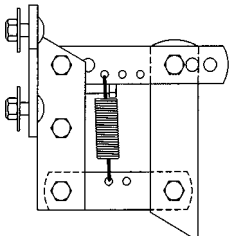

Position 1 *(Minimum)* (PLTR31a)

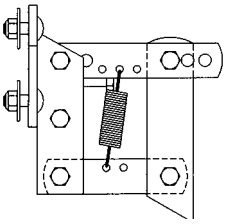

Position 2 (PLTR32a)

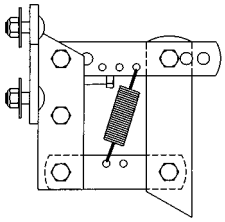

Position 3 *(Maximum)* (PLTR33a)

For additional uplift or float, position springs as shown below.

(PLTR34a)

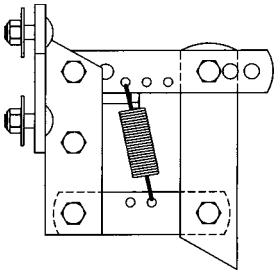

To adjust down force springs, raise the row unit out of the ground and reposition springs as shown for the desired down pressure.

D101701112

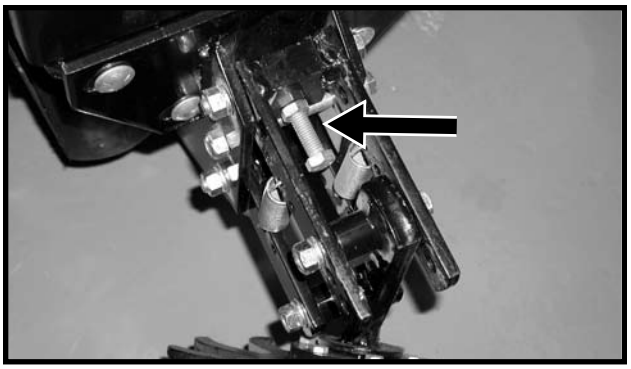

A full threaded bolt and jam nut located on the upper link allows maximum depth to be set for loose soil conditions. Initial setting should be 1 ¾" above the depth of the row unit double disc opener.

Three holes in the upper link allow for wheel angle adjustment. With the wheel mount in the most vertical position, using the rear hole in the upper link, the residue wheel is most aggressive. Moving the wheel mount to one of the forward holes reduces the aggressiveness of the wheel for use in mulch till applications where the soil is loose.

D101701202

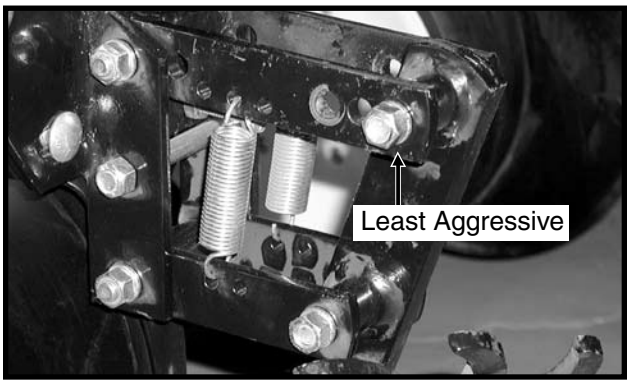

To lock the residue wheel up out of the ground, remove the ½" x 5" lockup bolt, raise the residue wheel and install bolt.

D011701203

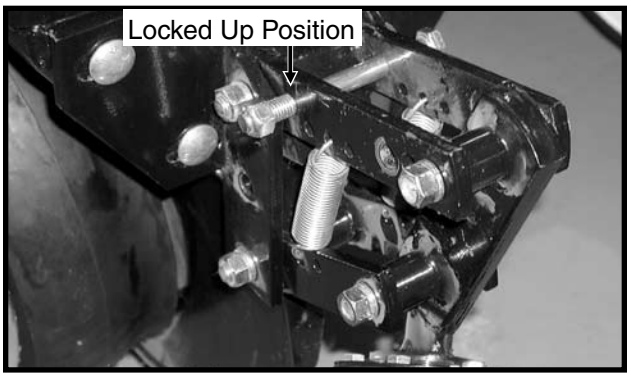

ROW UNIT MOUNTED NO TILL COULTER

LF212299-19a

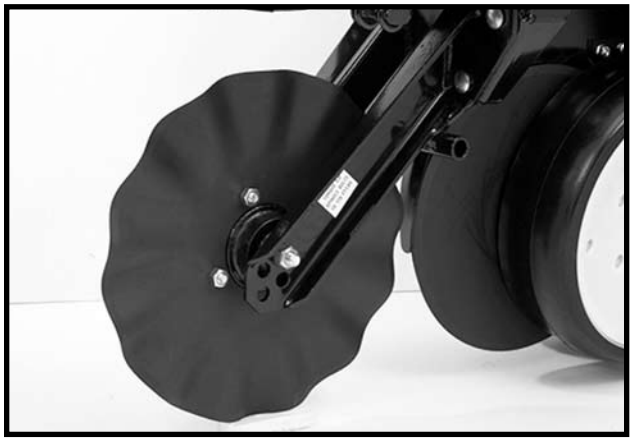

STYLE A (Two Sleeves For Installing Coulter Mounted Residue Wheels)

D05170706a

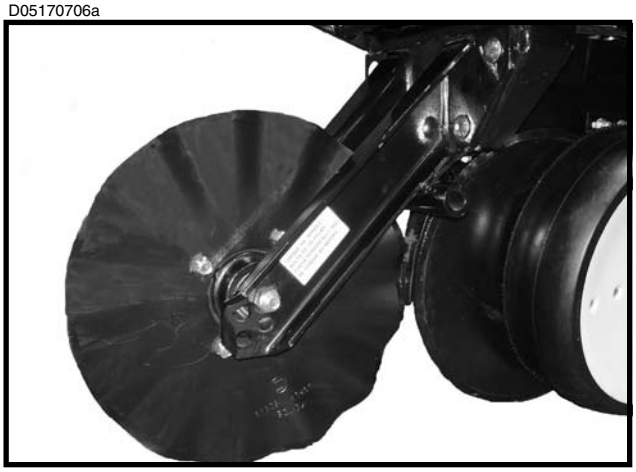

STYLE B (One Sleeve For Installing Coulter Mounted Residue Wheels)

Row unit mounted no till coulters with 1" bubbled, 1" fluted (8 flutes) or ¾" fluted (13 flutes) blades may be used on pull row units and push row units. (¾" fluted shown)

Four quick adjustable down force springs are required per row when using row unit mounted no till coulters. See “Quick Adjustable Down Force Springs”.

For proper operation, the coulter blade should be aligned in relation to the row unit double disc openers. The coulter assembly can be adjusted by loosening the four attaching bolts, moving coulter arm to align and tightening the four attaching bolts.

The coulter blade can be adjusted to one of four ½" incremental settings in the forked arm. Initial location of the coulter is in the top hole. As the coulter blade wears, the blade should be adjusted downward to one of the three lower settings to maintain the coulter blade at or slightly below the opener discs. In very hard soil conditions such as compacted wheel tracks, opener penetration and cutting of surface residue may be improved by adjusting the coulter to operate below the depth of the double disc opener blades.

Operating depth can be checked by setting the planter down on a level concrete floor and checking the relationship between the coulter blade and row unit opener blade. Make sure the planter is level and coulter is square with the planter frame and aligned with the row unit disc opener.

NOTE: Torque ⅝" spindle bolts to 120 ft. lbs.

COULTER MOUNTED RESIDUE WHEELS

LF212299-23

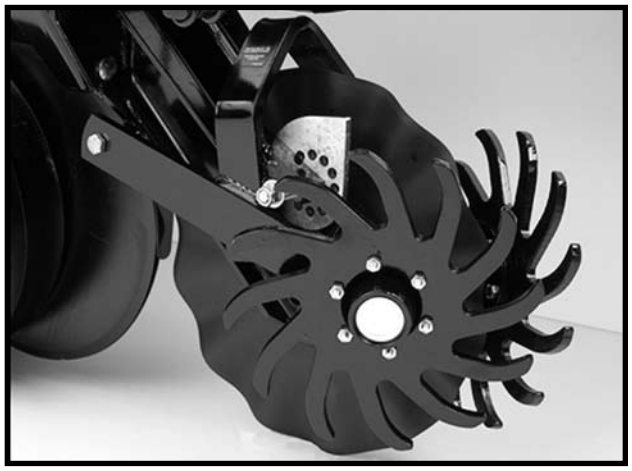

STYLE A - Used With Style A Row Unit Mounted No Till Coulter

D05170708a

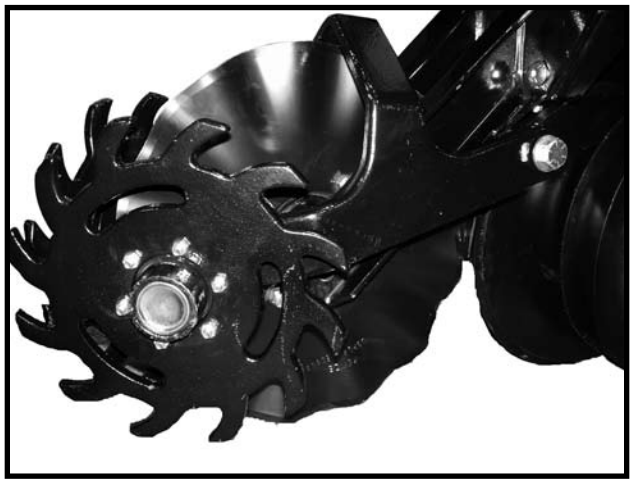

STYLE B - Used With Style B Row Unit Mounted No Till Coulter

Coulter mounted residue wheels are designed for use on pull row units and push row units. Row unit extension brackets are required on the four center pull row units if the planter is equipped with coulter mounted residue wheels.

The coulter mounted residue wheels are attached to the row unit mounted no till coulter with one cap screw and sleeve allowing the unit to free-float. A 2-position spindle bolt mounting allows the tined wheels to be mounted interlocked or staggered. Depth adjustment is made using a spring-loaded cam and pin with 11 positions in ¼" increments. A high point on the cam allows the wheels to be locked up so they do not contact the ground. A weed guard, located on the inboard side of each wheel, aids in the prevention of weed wrap which can cause premature bearing failure.

(RU104tt)

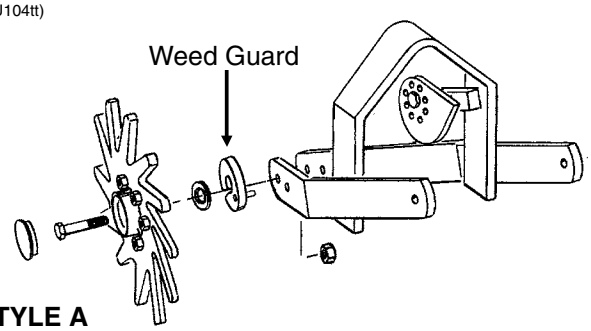

STYLE A

(RU153a)

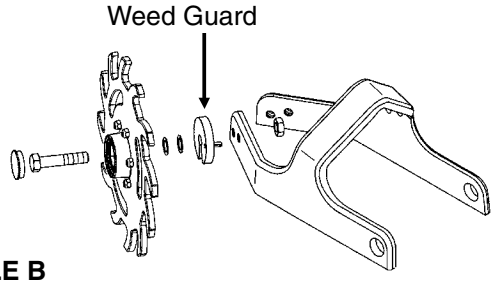

STYLE B

NOTE: Opening in weed guard must point down.

SPRING TOOTH INCORPORATOR

The spring tooth incorporator smoothes the soil behind the row unit and incorporates granular chemicals. The two mounting chains on each spring tooth incorporator should be adjusted so there is approximately ⅛" slack in the chain when the unit is lowered to planting position.

NOTE: The spring tooth incorporator is not compatible with the covering discs/single press wheel option.

LF212299-26

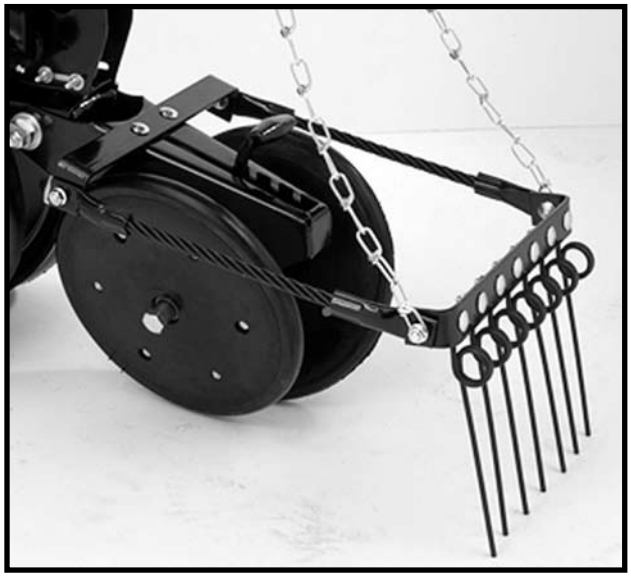

INTERPLANT® PUSH ROW UNIT CLUTCH SPROCKET

06309716

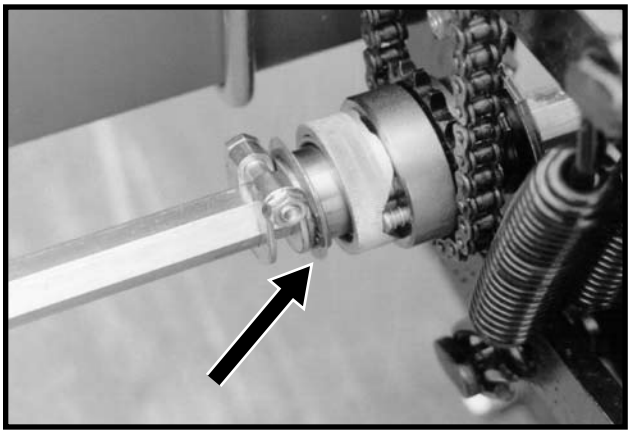

The push row unit clutch sprocket is designed to allow the push row unit drill shaft to be disengaged when only the pull row units are being used.

To disengage the push row unit drill shaft using the clutch sprocket, rotate the knurled collar on the clutch sprocket ¼ turn. Then using a ⅞" wrench on the drill shaft, rock the drill shaft slightly to take pressure off of the spring loaded pins in the clutch to allow the pins to “pop” out, disengaging the drive. To engage the drive, rotate the knurled collar ¼ turn and turn the drill shaft with a ⅞" wrench until the drive pins engage the drive sprocket.

WARNING: Always install all safety lockups or lower planter to the ground before working under or around the machine.

INTERPLANT® PUSH ROW UNIT LOCKUPS

Push row unit lockups are designed to allow the push row units to be locked in the raised position.

WARNING: Always install all safety lockup devices or lower planter to the ground before working under or around the machine.

D062603106

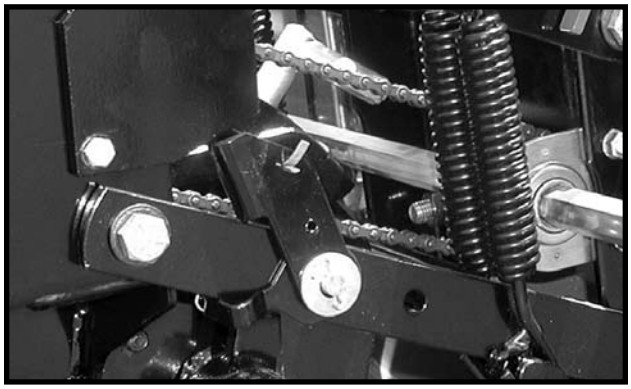

Push Row Unit Locked In Raised Position

D062603103

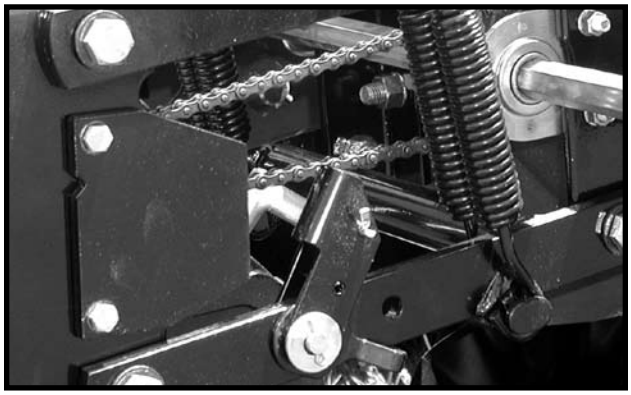

Lockup Released For Field Operation

D062603106

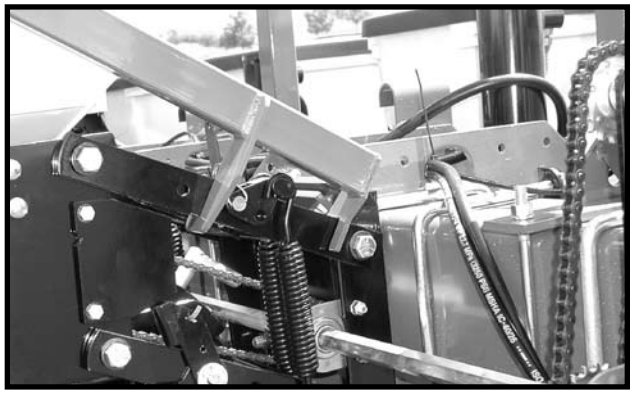

Lift Lever Positioned To Lift Push Row Unit

To lock in raised position:

1. Set row unit down pressure springs to minimum setting.
2. Lower the planter to the planting position.
3. Empty seed hoppers.
4. On each push row unit lockup, flip the spring tab forward.

D060499108

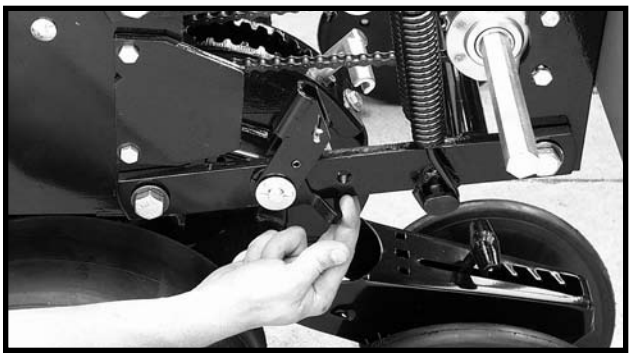

5. Using the lift lever, raise the push row unit to allow the spring loaded lockups to snap into locked position under the row unit stops.
6. Repeat Steps 4 and 5 on remaining push row units.

To release lockups:

1. Lower the planter to the planting position.
2. On each push row unit lockup, flip the spring tab rearward.

D060499107

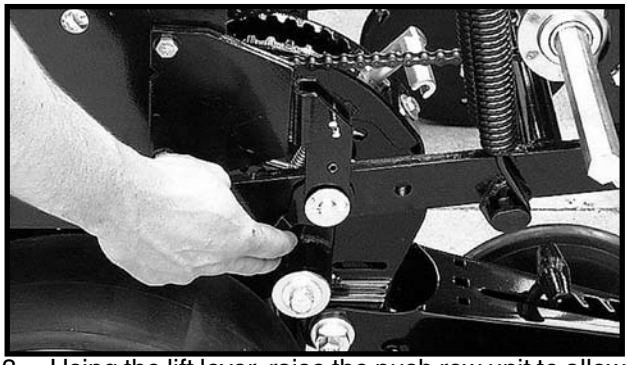

3. Using the lift lever, raise the push row unit to allow the spring loaded lockups to snap out of locked position. Lower row unit to the ground.
4. Repeat Step 3 on remaining push row units.

D070699109

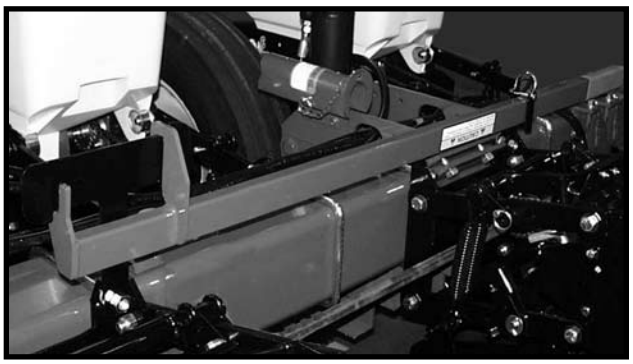

Lift Lever In Storage Location

LUBRICATION

The following pages show the locations of all lubrication points. Proper lubrication of all moving parts will help ensure efficient operation of your KINZE® planter and prolong the life of friction producing parts.

WARNING: Always install safety lockup devices or lower the machine to the ground before working under or around the machine.

LUBRICATION SYMBOLS

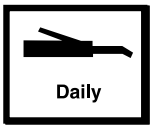

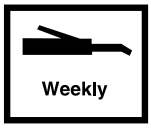

Lubricate at frequency indicated with an SAE multipurpose grease.

Lubricate at frequency indicated with a high quality SAE 10 weight oil or a quality spray lubricant.

AIR CLUTCHES

Lubricate air clutches every 75-100 hours.

Using a Phillips head screw driver remove the Phillips screw as shown and spray a 1-2 second burst of silicone spray into each clutch, then insert and retighten the screws.

D06060802

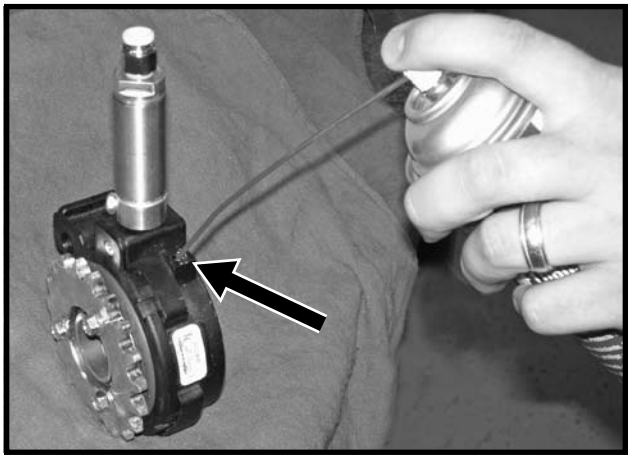

SEALED BEARINGS

LF212199-3

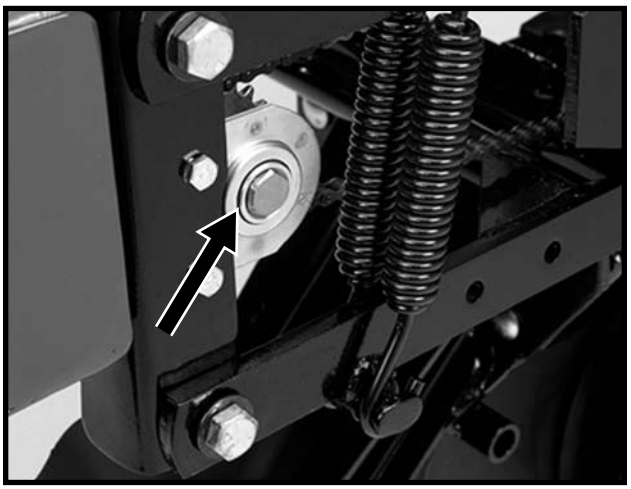

A number of sealed bearings are used on your KINZE® planter to provide trouble free operation. These are located in such areas as the drive shaft, row units and transmission bearings. Sealed bearings are lubricated for life. Due to the seals, relubrication is not practical.

DRIVE CHAINS

Drive chains should be lubricated daily with a high quality chain lubricant. Extreme operating conditions such as dirt, temperature or speed may require more frequent lubrication. If a chain becomes stiff, it should be removed, soaked and washed in solvent to loosen and remove dirt from the joints. Then soak the chain in oil so the lubricant can penetrate between the rollers and bushings.

D07140303a

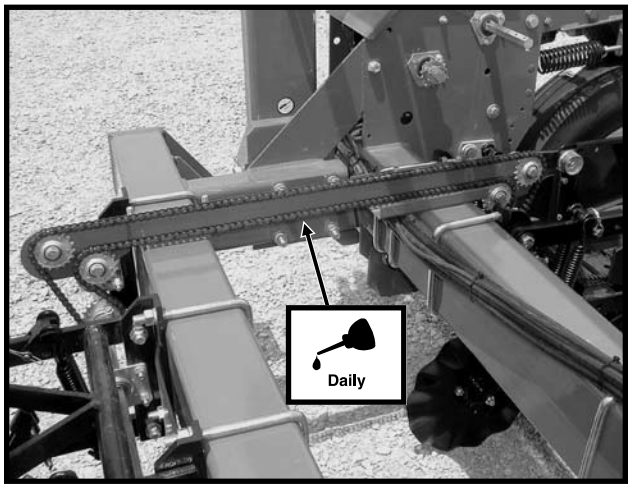

Interplant® Package Drive Chains

D070804112(TWL219e)

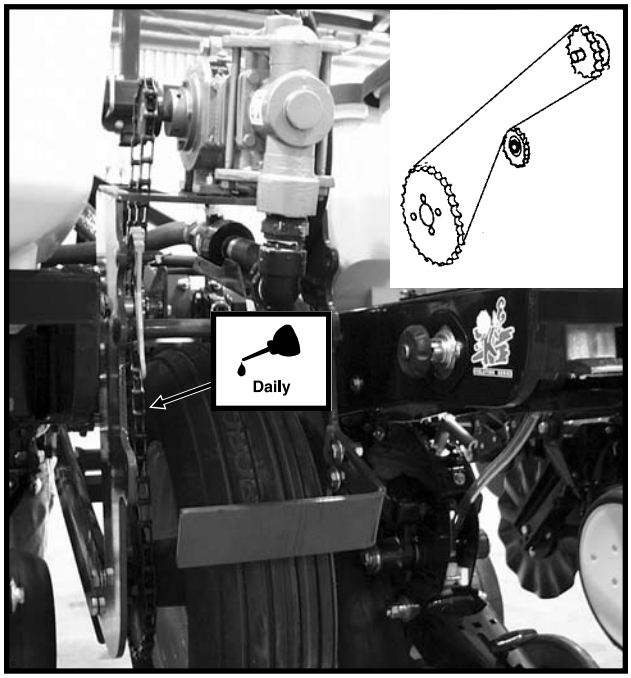

Liquid Fertilizer Ground Drive Chain (Piston Pump)

77570-46a

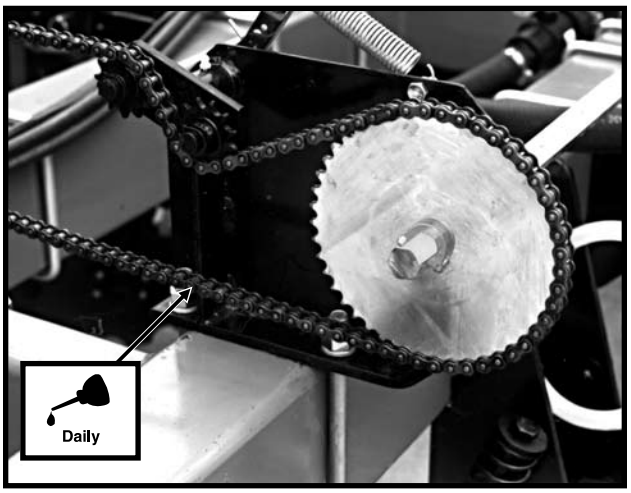

Liquid Fertilizer Drive Chains (Squeeze Pump)

BUSHINGS

Lubricate bushings at the frequency indicated.

Using a torque wrench, check each bolt for proper torque. If bolt is loose, it should be removed and the bushing inspected for cracks and wear. Replace bushing if necessary. **Only hardened flat washers should be used. Replace damaged flat washers with proper part. Torque hardware to 130 ft. lbs.**

D06300305

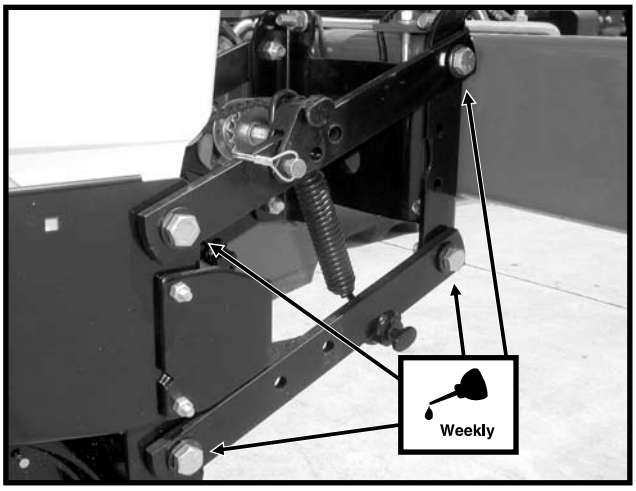

Pull Row Unit And/Or Push Row Unit Parallel Linkages (8 Per Row)

LF212299-22

Row Unit Mounted Disc Furrower Parallel Linkages (6 Per Row)

LF212199-2

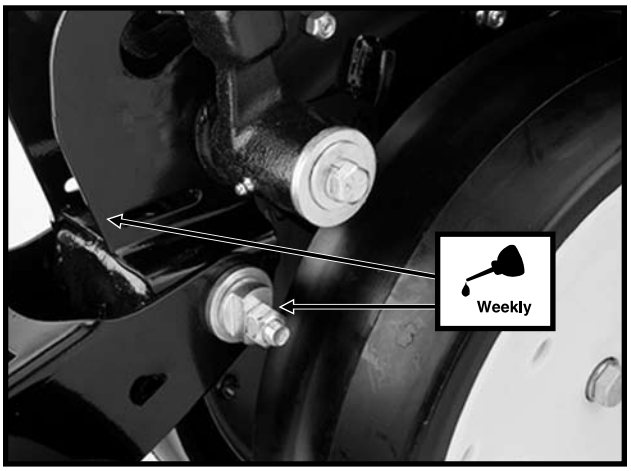

Row Unit "V" Closing Wheel, Covering Discs/ Single Press Wheel And/Or Drag Closing Wheel Eccentric Bushings (2 Per Row)

D061901128

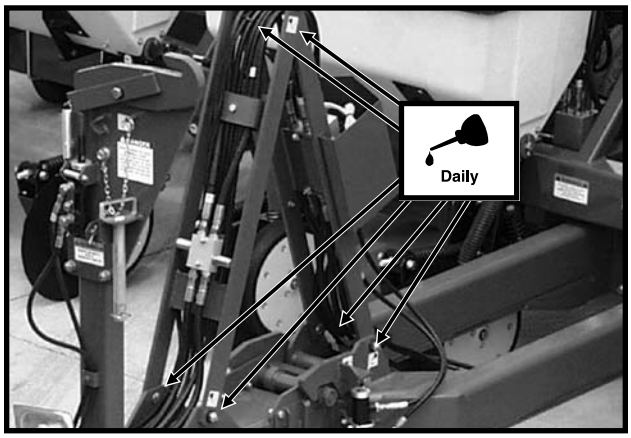

Hose Take-Up (6 Locations)

D060299216

Transport Latch (1 Location)

82316-16

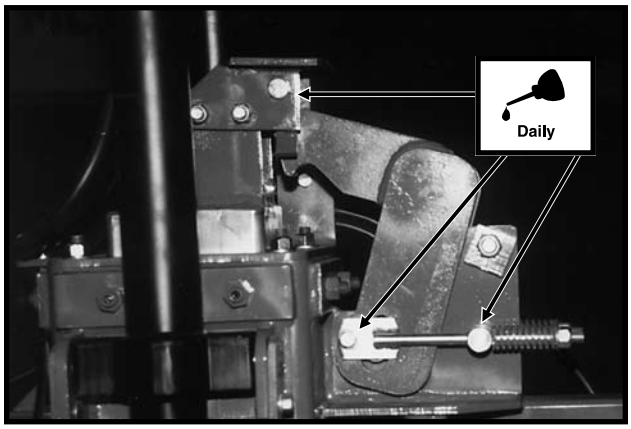

Safety Hook Located At Top Of Center Section

NOTE: CENTER POST AND POLY WEAR PADS REQUIRE NO LUBRICATION. ANY OIL OR GREASE WILL ATTRACT DIRT AND ACCELERATE WEAR ON THE CENTER POST AND ON THE POLY WEAR PADS.

INTERPLANT® PUSH ROW UNIT LOCKUPS

D06099906

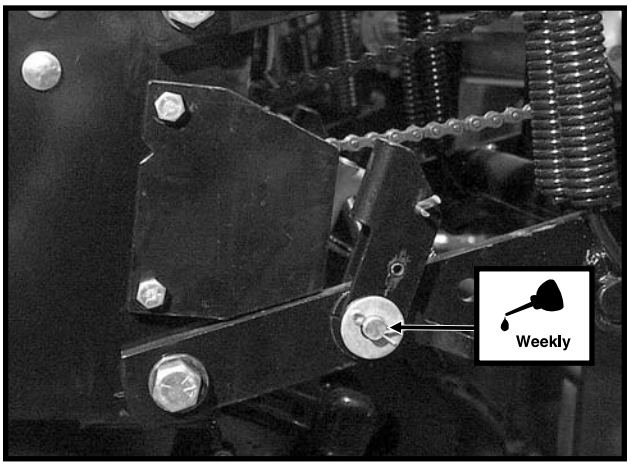

2 Per Row

WHEEL BEARINGS

The transport wheel hubs are equipped with grease fittings. Pump grease into the hub until grease comes out around the seals. See “Grease Fittings” for lubrication frequency.

All wheel bearings should be repacked annually and checked for wear. This applies to all drive wheels, transport wheels and marker hubs.

To check for wear, lift the wheel off the ground. Check for endplay in the bearings by moving the tire side to side. Rotate the tire to check for roughness in the bearings. If bearings sound rough, the hub should be removed and the bearings inspected and replaced if necessary. See “Wheel Bearing Lubrication Or Replacement”.

To repack wheel hubs, follow the procedure outlined for wheel bearing replacement with the exception that bearings and bearing cups are reused.

U-JOINT SLIDES

Lubricate all U-joint slides daily with a high quality lubricant.

76740-54

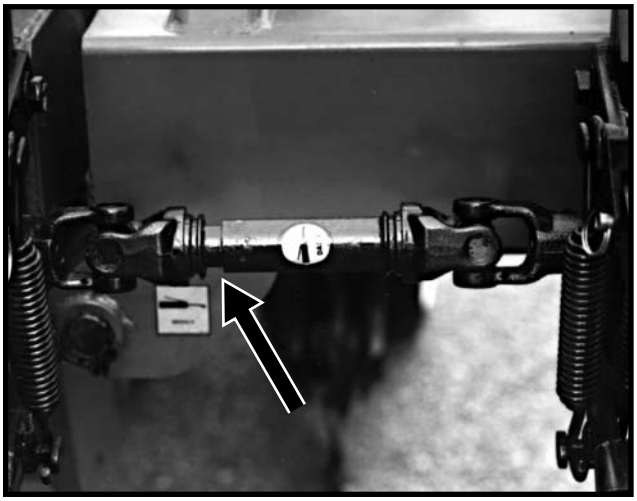

CENTER POST

D060299107

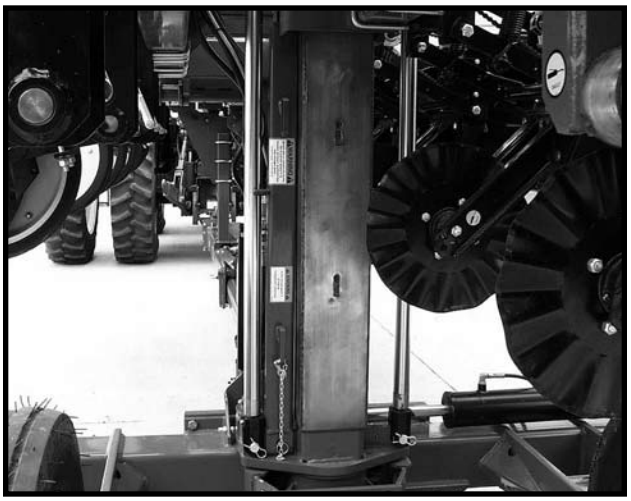

The center post is clad with stainless steel. To prolong service life keep stainless steel surface clean and free of any lubrication.

CENTER POST AND POLY WEAR PADS REQUIRE NO LUBRICATION. ANY OIL OR GREASE WILL ATTRACT DIRT AND ACCELERATE WEAR ON THE CENTER POST AND ON THE POLY WEAR PADS.

See “Wear Pad Replacement/Adjustment” for additional information.

LIQUID FERTILIZER PISTON PUMP CRANKCASE OIL LEVEL

(A12330a)

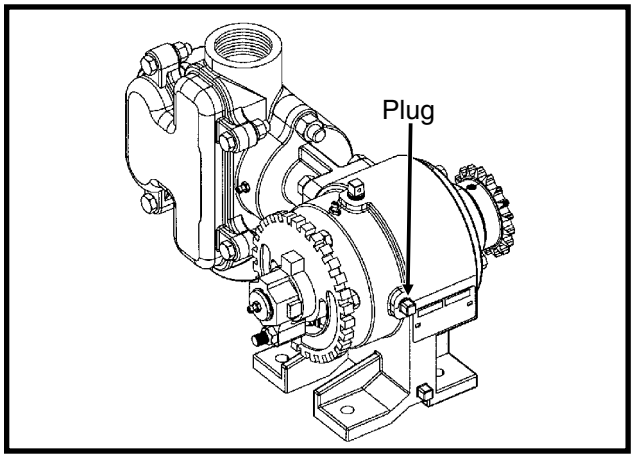

Check crankcase oil daily and maintain at plug level. Fill as needed with EP 90 weight gear oil. Total oil capacity is approximately ¾ pint.

Refer to operator and instruction manual supplied with the pump and flow divider for additional information.

GREASE FITTINGS

Those parts equipped with grease fittings should be lubricated at the frequency indicated with an SAE multipurpose grease. Be sure to clean the fitting thoroughly before using grease gun. The frequency of lubrication recommended is based on normal operating conditions. Severe or unusual conditions may require more frequent attention.

WARNING: Always install safety lockup devices or lower the machine to the ground before working under or around the machine.

NOTE: Numbers on below photo correspond to photos on following pages showing lubrication frequencies.

D05140836

12 Row 30" Shown

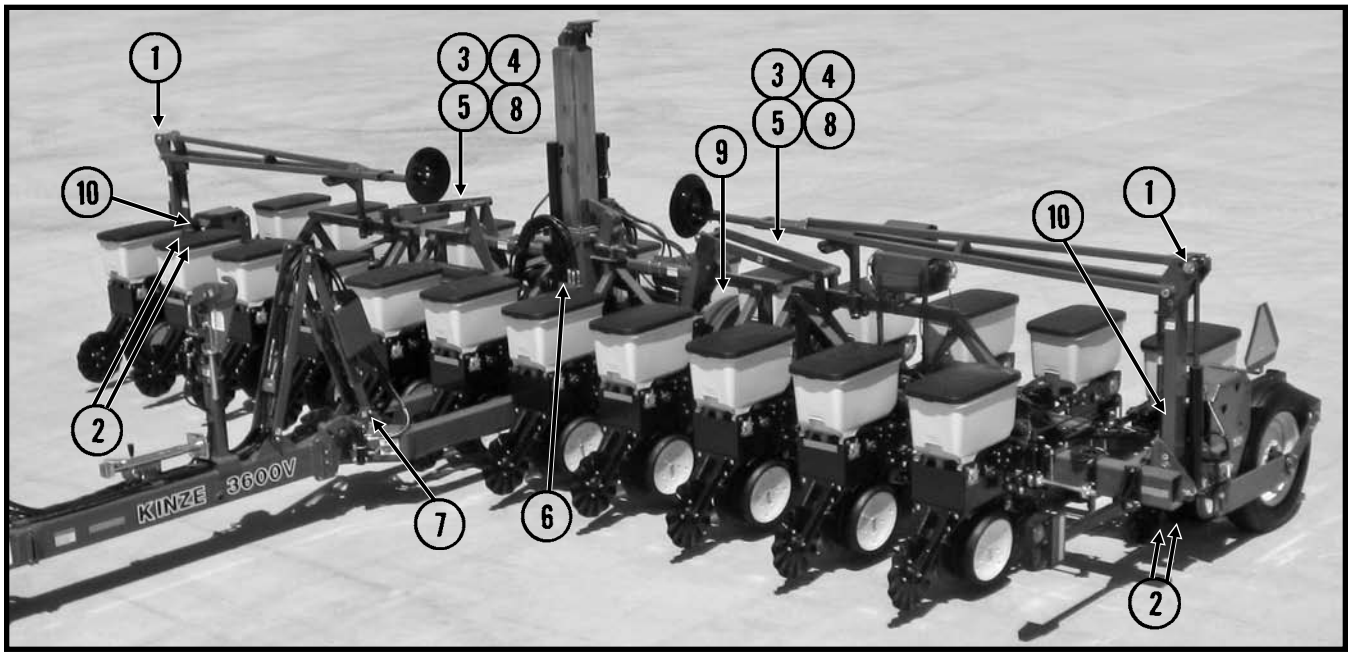

D05140857

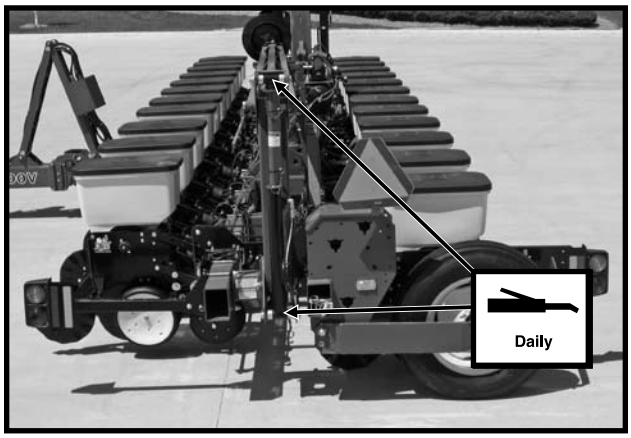

1. Row Marker Assemblies - 4 Zerks Per Assembly 12 Row 30" and 2 Zerks Per 16 Row 30".

76609-17

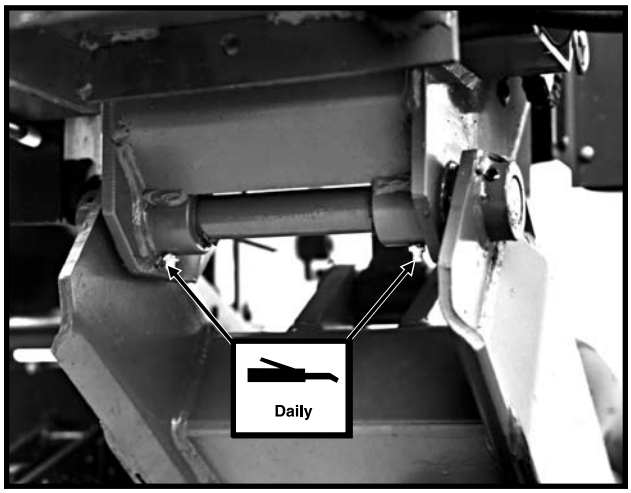

2. Wing Wheel Pivot - 2 Zerks Per Wheel Module

81439-29

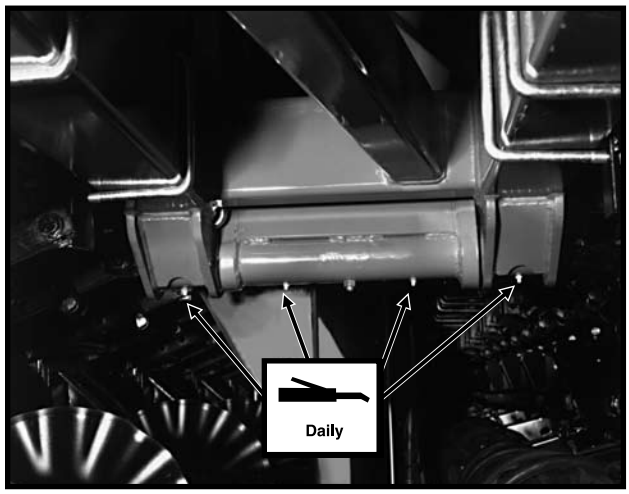

3. Wing Hinges - 4 Zerks Per Wing

D05050827

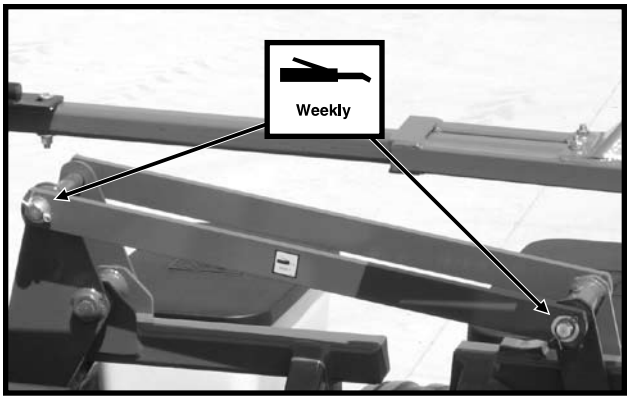

4. Wing Locks - 3 Zerks Per Wing

81439-29

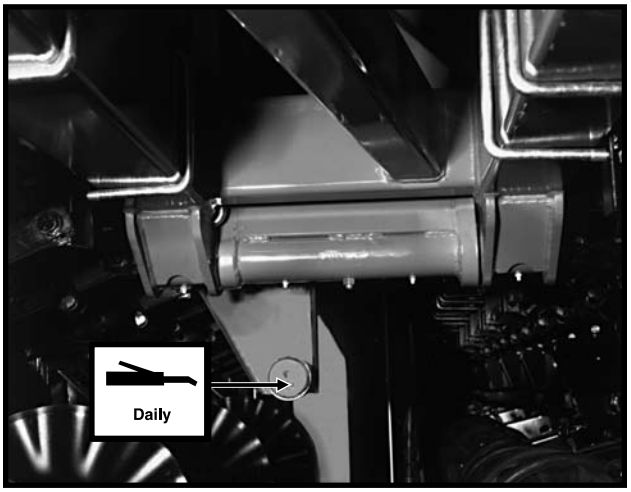

5. Cam Follower - 1 Zerk Per Follower

76609-36

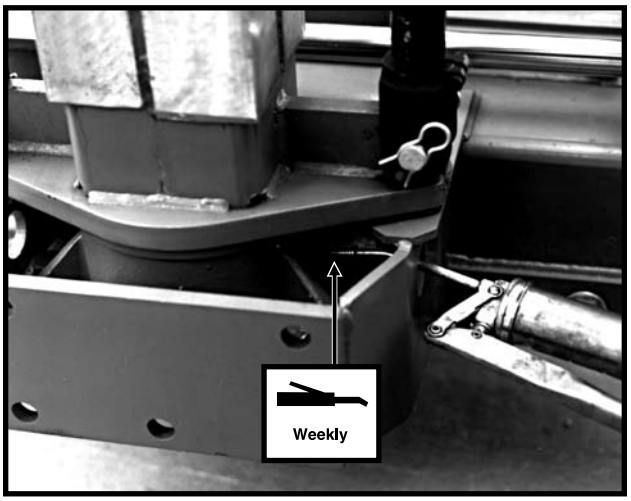

6. Center Pivot - 1 Zerk

81439-7

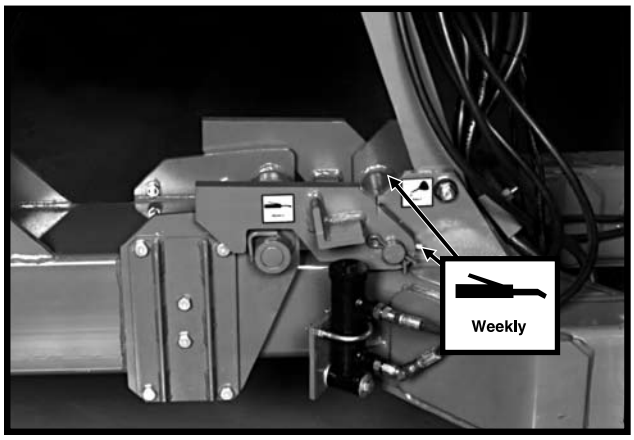

7. Tongue Hook - 2 Zerks

76740-54

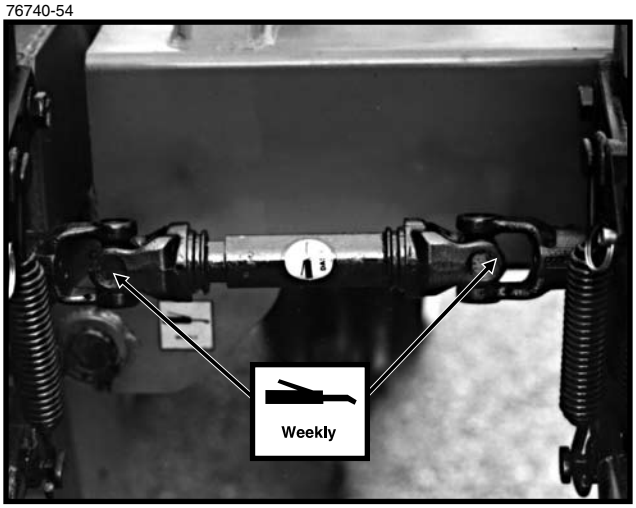

8. U-Joints - 2 Zerks Per Hinge Area

D091602101

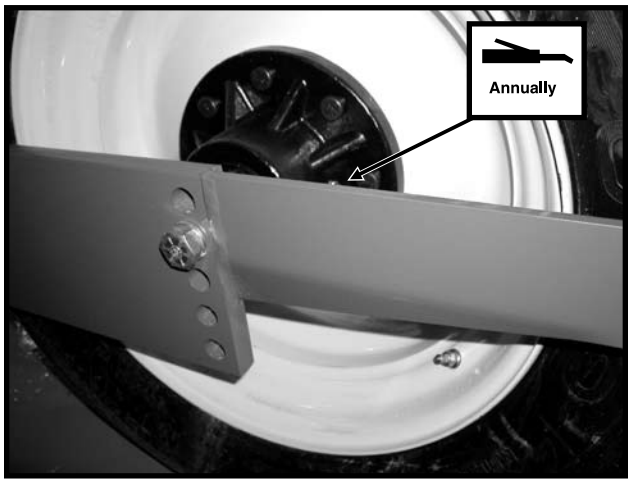

9. Transport Wheel Bearings - 1 Zerk Per Hub

05199819a

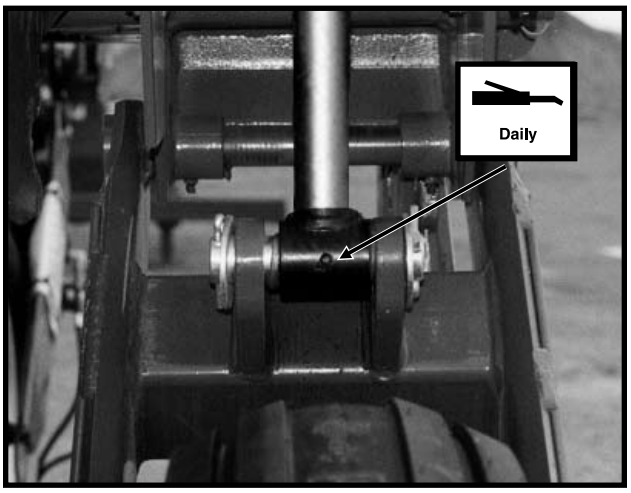

10. Wing Lift Cylinders - 1 Zerk Per Cylinder

Row Unit

LF212199-2

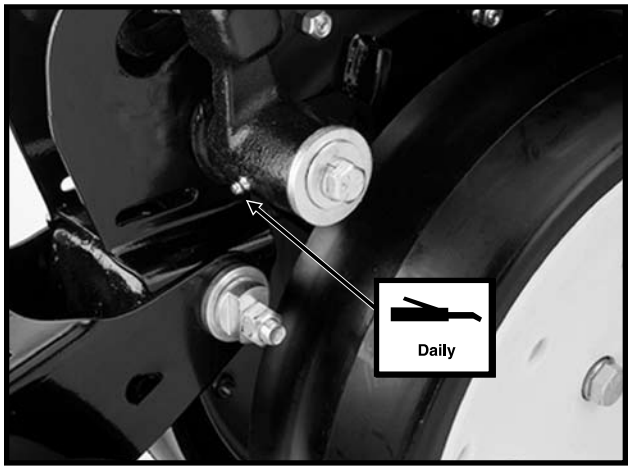

Gauge Wheel Arms - 1 Zerk Per Arm
(Seals in gauge wheel arm are installed with lip facing out to allow grease to purge dirt away from seal. Pump grease into arm until fresh grease appears between washers and arm.)

LF083002101

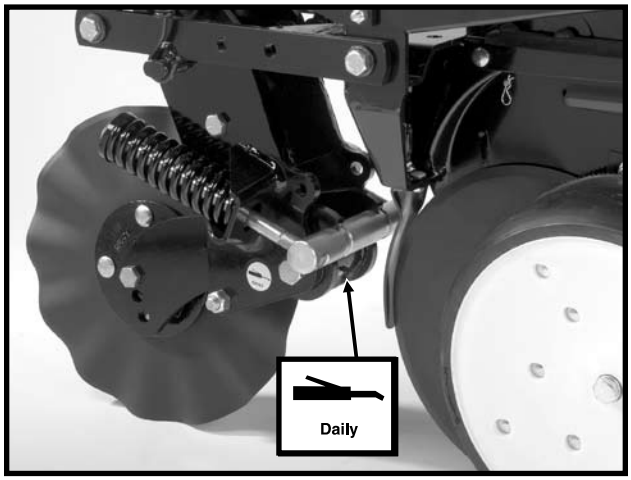

Frame Mounted Coulter - 1 Zerk Per Arm

Fertilizer Openers

D060801304

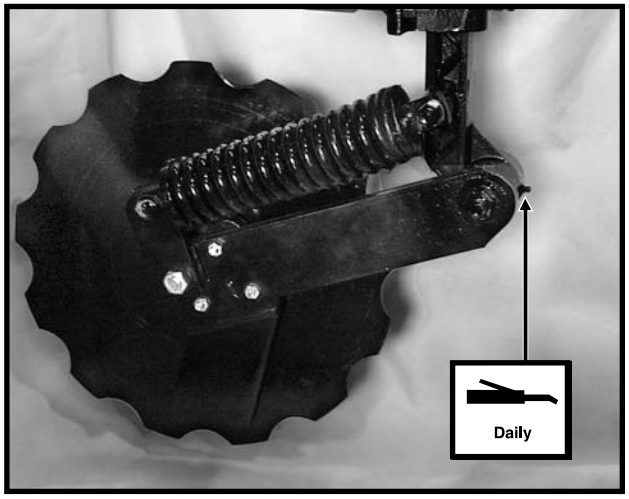

Notched Single Disc Fertilizer Opener - 1 Zerk

D05219901a

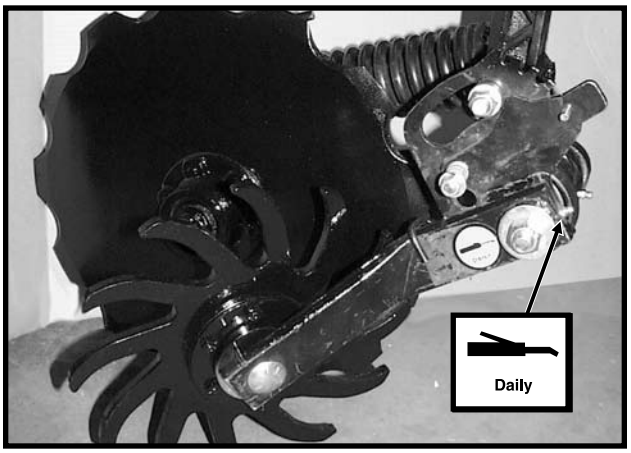

Residue Wheel Attachment For Use With Notched Single Disc Fertilizer Opener - 1 Zerk

D06259919

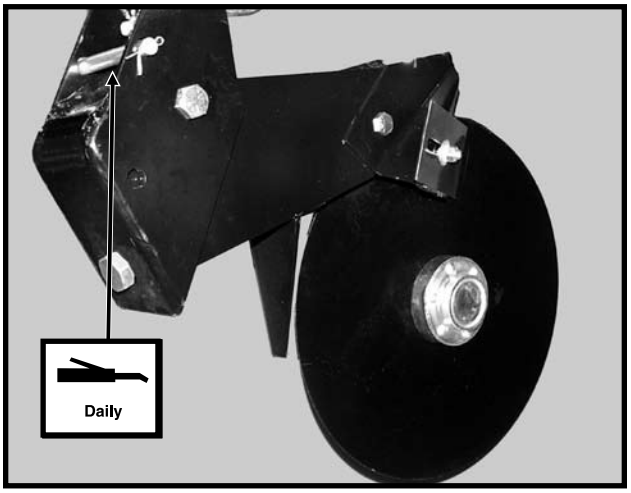

Double Disc Fertilizer Opener - 1 Zerk

D060801304

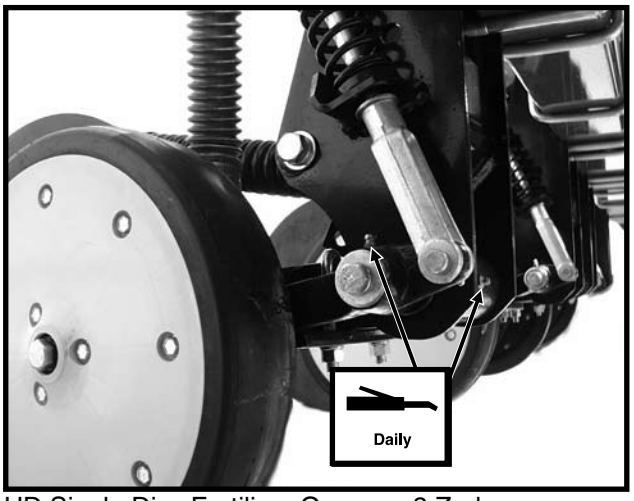

HD Single Disc Fertilizer Opener - 2 Zerks
(Located On Wheel Arm And Opener Mount)

D060801303

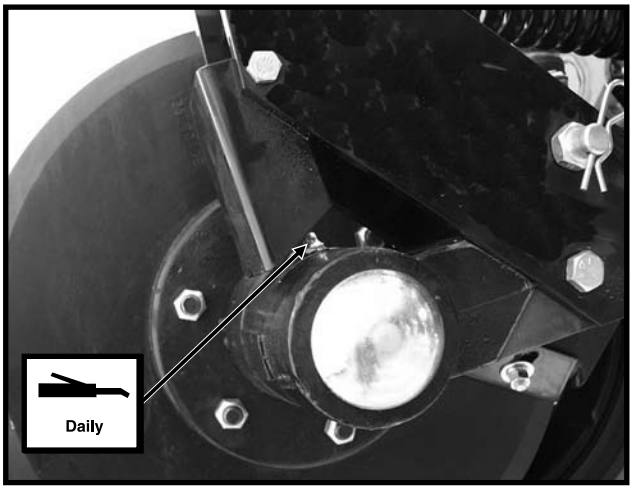

HD Single Disc Fertilizer Opener - 1 Zerk
(Located On Disc Opener Spindle Hub)

(A12330a)

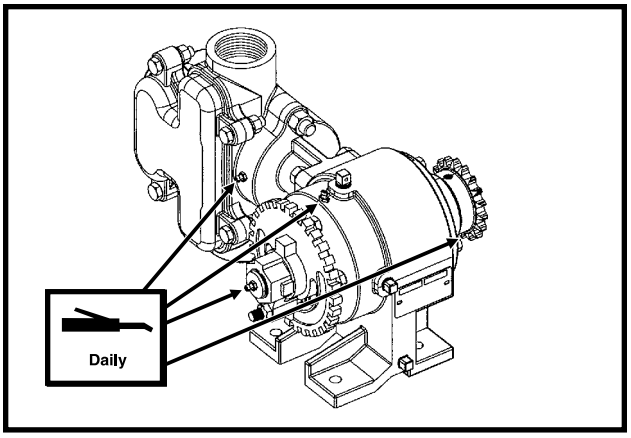

Liquid Fertilizer Piston Pump - 4 Zerks **(Fill zerk on outboard stuffing box until lubricant seeps out of drain hole in bottom.)**

MAINTENANCE

MOUNTING BOLTS AND HARDWARE

Before operating the planter for the first time, check to be sure all hardware is tight. Check all hardware again after approximately the first 50 hours of operation and at the beginning of each planting season thereafter.

All hardware used on the KINZE® planter is Grade 5 (high strength), unless otherwise noted. Grade 5 cap screws are marked with three radial lines on the head. If hardware must be replaced, be sure to replace it with hardware of equal size, strength and thread type. Refer to the torque values chart when tightening hardware.

Row unit parallel linkage bushing bolts - 130 Ft. Lbs. (See "Bushings" in the Lubrication section of this manual.)

IMPORTANT: Over tightening hardware can cause as much damage as under tightening. Tightening hardware beyond the recommended range can reduce its shock load capacity.

WARNING: Before operating the planter for the first time and periodically thereafter, check to be sure the lug nuts on the transport wheels are tight. This is especially important if the planter is to be transported for a long distance.

Center Section Transport Tire Lug Nuts - 125 Ft. Lbs.
Wing Ground Drive Tire Lug Bolts - 90 Ft. Lbs.
⅝" No Till Coulter Spindle Bolts - 120 Ft. Lbs.

TORQUE VALUES CHART - PLATED HARDWARE

Bolt Diameter	Grade 2		Grade 5		Grade 8	
	Coarse	Fine	Coarse	Fine	Coarse	Fine
¼"	50 In. Lbs.	56 In. Lbs.	76 In. Lbs.	87 In. Lbs.	9 Ft. Lbs.	10 Ft. Lbs.
5⁄16"	8 Ft. Lbs.	9 Ft. Lbs.	13 Ft. Lbs.	14 Ft. Lbs.	18 Ft. Lbs.	20 Ft. Lbs.
⅜"	15 Ft. Lbs.	17 Ft. Lbs.	23 Ft. Lbs.	26 Ft. Lbs.	33 Ft. Lbs.	37 Ft. Lbs.
7⁄16"	25 Ft. Lbs.	27 Ft. Lbs.	37 Ft. Lbs.	41 Ft. Lbs.	52 Ft. Lbs.	58 Ft. Lbs.
½"	35 Ft. Lbs.	40 Ft. Lbs.	57 Ft. Lbs.	64 Ft. Lbs.	80 Ft. Lbs.	90 Ft. Lbs.
9⁄16"	50 Ft. Lbs.	60 Ft. Lbs.	80 Ft. Lbs.	90 Ft. Lbs.	115 Ft. Lbs.	130 Ft. Lbs.
⅝"	70 Ft. Lbs.	80 Ft. Lbs.	110 Ft. Lbs.	125 Ft. Lbs.	160 Ft. Lbs.	180 Ft. Lbs.
¾"	130 Ft. Lbs.	145 Ft. Lbs.	200 Ft. Lbs.	220 Ft. Lbs.	280 Ft. Lbs.	315 Ft. Lbs.
⅞"	125 Ft. Lbs.	140 Ft. Lbs.	320 Ft. Lbs.	350 Ft. Lbs.	450 Ft. Lbs.	500 Ft. Lbs.
1"	190 Ft. Lbs.	205 Ft. Lbs.	480 Ft. Lbs.	530 Ft. Lbs.	675 Ft. Lbs.	750 Ft. Lbs.
1 ⅛"	265 Ft. Lbs.	300 Ft. Lbs.	600 Ft. Lbs.	670 Ft. Lbs.	960 Ft. Lbs.	1075 Ft. Lbs.
1 ¼"	375 Ft. Lbs.	415 Ft. Lbs.	840 Ft. Lbs.	930 Ft. Lbs.	1360 Ft. Lbs.	1500 Ft. Lbs.
1 ⅜"	490 Ft. Lbs.	560 Ft. Lbs.	1100 Ft. Lbs.	1250 Ft. Lbs.	1780 Ft. Lbs.	2030 Ft. Lbs.
1 ½"	650 Ft. Lbs.	730 Ft. Lbs.	1450 Ft. Lbs.	1650 Ft. Lbs.	2307 Ft. Lbs.	2670 Ft. Lbs.

NOTE: Unplated hardware and bolts with lock nuts should be torqued approximately ⅓ higher than the above values. Bolts lubricated prior to installation should be torqued to 70% of value shown in chart.

GRADE 2 **No Marks**	**GRADE 5** **3 Marks**	**GRADE 8** **6 Marks**

TORQUE VALUES- ALUMINUM

Bolt Diameter	Torque Value
⅛"	180-220 In. Lbs.
¾"	350-400 In. Lbs.
½"	350-400 In. Lbs.
⅜"	350-380 In. Lbs.

NOTE: These torque values are to be used with pneumatic down pressure components.

CHAIN TENSION ADJUSTMENT

The drive chains have spring loaded idlers and therefore are self-adjusting. The only adjustment needed is to shorten the chain if wear stretches the chain and reduces spring tension. The pivot point of these idlers should be checked periodically to ensure they rotate freely.

TIRE PRESSURE

D05050845

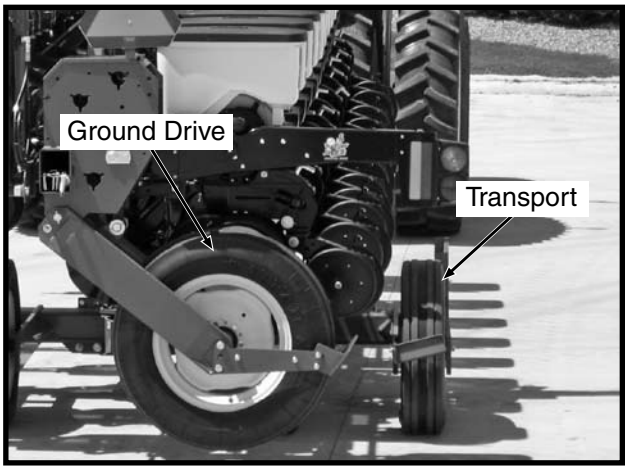

Tire pressure should be checked regularly and maintained as follows:

255-70R 22.5" Transport (Center Section) .....75 PSI
7.50" x 20" Ground Drive (Wings) .....40 PSI
7.60" x 15" Ground Drive
(Liquid Fertilizer Piston Pump) .....40 PSI

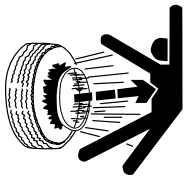

DANGER: Rim and tire servicing can be dangerous. Explosive separation of tire and rim parts can cause serious injury or death.

Do not attempt to mount a tire unless you have the proper equipment and experience to perform the job. This should only be done by persons properly trained and equipped to do the job.

Always maintain the correct tire pressure. Do not inflate the tires above the recommended pressure.

When inflating tires, use a clip-on air chuck and extension hose long enough to allow you to stand to one side and NOT in front of or over the tire assembly. Use a safety cage to enclose the tire and rim assembly when inflating.

Inspect tires and wheels daily. Do not operate with low pressure, cuts, bubbles, damaged rims or missing lug bolts and nuts.

FINGER PICKUP SEED METER INSPECTION/ADJUSTMENT

To inspect or service the finger pickup seed meter, remove the meter from the seed hopper by removing the two thumbscrews which secure the mechanism to the hopper. Remove the baffle from the meter assembly by removing three cap screws. This will permit access to the finger pickup.

D04229901

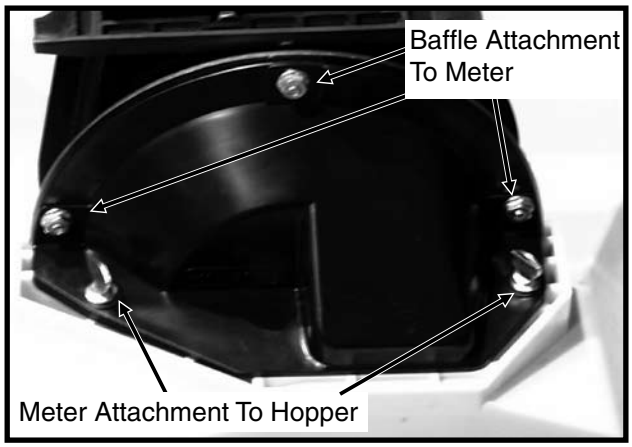

Rotate the seed meter drive by hand to ensure that the springs are holding the tabs of the fingers against the carrier plate where indicated in the photo and that the fingers are being raised in the correct area.

D12220402a

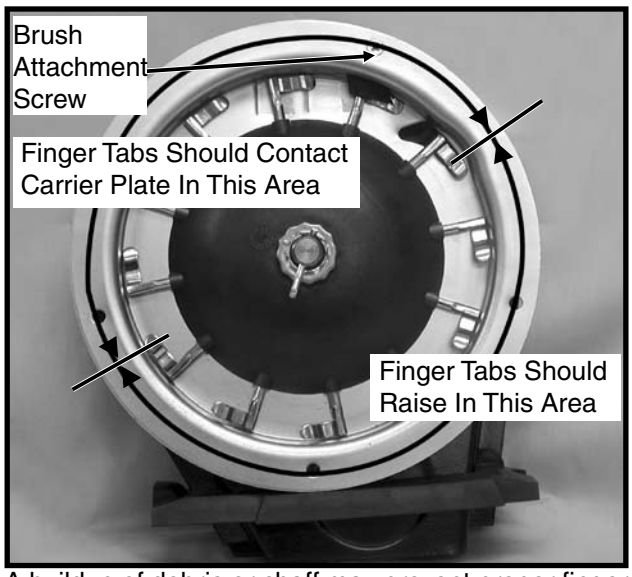

A buildup of debris or chaff may prevent proper finger operation and will require disassembly and cleaning of the finger pickup meter as follows:

1. Remove cotter pin, cover nut and adjusting nut and wave washer (If Applicable) from drive shaft.

2. Carefully lift finger holder, along with fingers and cam, off of the shaft. Clean.

60620-3b

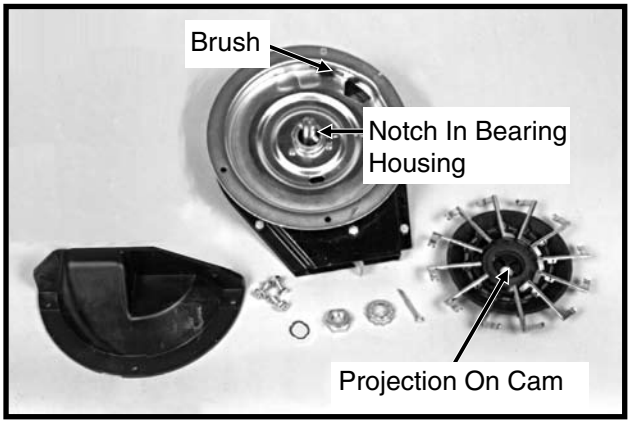

3. Check brush for wear and replace if necessary or following every 100 acres per row of operation.

EXAMPLE: Approximately 1200 acres on a 12 row machine or 1600 acres on a 16 row machine.

NOTE: It is not necessary to remove finger holder to replace brush.

4. To replace fingers or springs, remove springs from fingers and remove finger from holder by lifting it out of the friction fit slot. Under average conditions, life expectancy of these parts should be 600-900 acres per row of operation.

5. After cleaning and/or replacing defective parts, reassemble the meter in the reverse order. When replacing fingers, make sure the open end of the spring loop is toward the inside of the finger holder.

60620-22

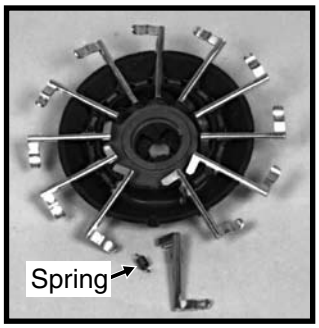

Corn Finger Assembly
(Position Spring Opening Toward Holder)

D07299902

Oil Sunflower Finger Assembly

6. Make sure fingers are installed in holder so that holder will be positioned flush with the carrier plate when assembled. A projection on the cam is designed to align with a mating notch in the bearing housing to ensure proper operation when assembled.

D021506100

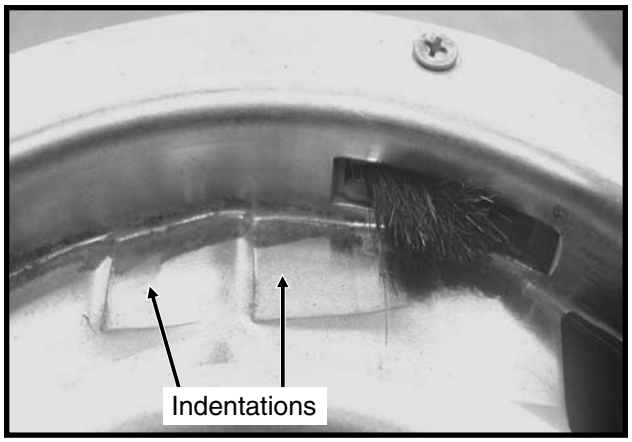

Photo Shows Worn Carrier Plate

7. Before installing the finger holder on the carrier plate, check the indentations on the carrier plate for wear. Excessive wear of the carrier plate at the indentations will cause over planting especially when using small sizes of seed.

   Inspect the carrier plate annually. Under average conditions, the life expectancy of the carrier plate should be 250-300 acres per row of operation.

8. With finger holder flush against the carrier, install wave washer and adjusting nut. Tighten adjusting nut to fully compress wave washer. Then back off nut ½ to 2 flats (1⁄12 to ⅓ turn) to obtain rolling torque of 22 to 25 inch pounds.

D07299903/D07309912

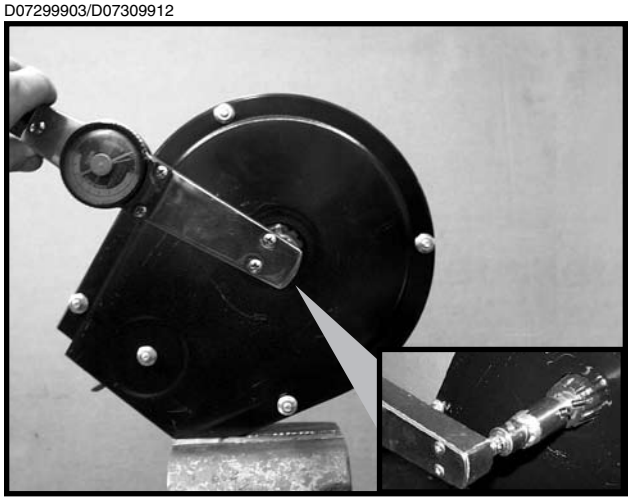

9. Turn finger holder by hand to make sure it is positioned firmly against the carrier plate, but is not over tightened and can be rotated with moderate force.

10. Install cover nut and cotter pin and reinstall baffle.

NOTE: Check tightness of adjusting nut on each unit after first day of use and periodically thereafter.

To inspect or replace the seed belt, remove the four cap screws around the edge of the housing cover and the nut from the belt idler mounting bolt.

60620-13a/60887-97

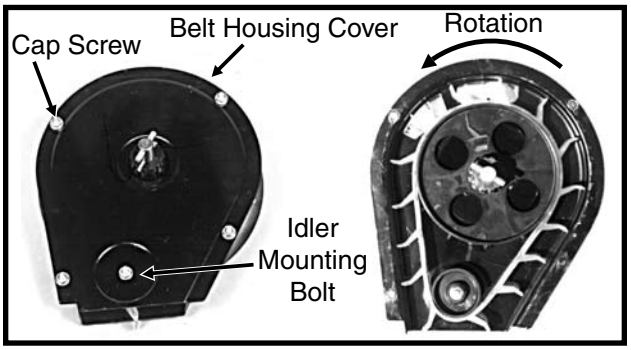

If the belt is being replaced, make sure it is installed to correctly orient the paddles as shown. A diagram molded into the drive sprocket also illustrates the correct orientation.

Reinstall the housing cover. DO NOT TIGHTEN hardware at this time. Wedge a screwdriver between the sprocket hub and housing cover as shown below. Pry cover down until it is centered on the belt housing and tighten hardware. Check idler alignment by rotating meter drive shaft. The seed belt should “run” centered on the idler or with only slight contact with the belt housing or cover.

IMPORTANT: Do not over tighten hardware.

D06200030

FINGER PICKUP SEED METER CLEANING

1. Disassemble meter.
2. Blow out any foreign material present in the meter mechanism.
3. Wash in mild soap and water. DO NOT USE GASOLINE, KEROSENE OR ANY OTHER PETROLEUM BASED PRODUCT.
4. Dry thoroughly.
5. Coat lightly with a rust inhibiter.
6. Rotate finger assembly so finger does not touch brush.
7. Reassemble and store in a dry rodent-free place.

FINGER PICKUP SEED METER TROUBLESHOOTING

PROBLEM	POSSIBLE CAUSE	SOLUTION
One row not planting seed.	Drive release not engaged.	Engage drive release mechanism.
	Foreign material in hopper.	Clean hopper and finger carrier mechanism.
	Seed hopper empty.	Fill seed hopper.
	Row unit drive chain off of sprocket or broken.	Check drive chain.
Unit is skipping.	Foreign material or obstruction in meter.	Clean and inspect.
	Finger holder improperly adjusted.	Adjust to specifications. (22 to 25 in. lbs. rolling torque)
	Broken fingers.	Replace fingers and/or springs as required.
	Planting too slowly.	Increase planting speed to within recommended range.
Planting too many doubles.	Planting too fast.	Stay within recommended speed range.
	Loose finger holder.	Adjust to specifications. (22 to 25 in. lbs. rolling torque)
	Worn brush in carrier plate.	Inspect and replace if necessary.
Overplanting.	Worn carrier plate.	Inspect and replace if necessary.
	Seed hopper additive being used.	Reduce or eliminate additive or increase graphite.
Underplanting.	Seed belt installed backwards.	Remove and install correctly.
	Weak or broken springs.	Replace.
	Spring not properly installed.	Remove finger holder and correct.
	Seed belt catching or dragging.	Replace belt.
	Brush dislodging seed.	Replace brush.
Irregular or incorrect seed spacing.	Driving too fast.	Check chart for correct speed.
	Wrong tire pressure.	Inflate tires to correct air pressure.
	Drive wheels slipping.	Reduce down pressure on row unit down force springs.
	Wrong sprockets.	Check seed rate charts for correct sprocket combinations.
Seed spacing not as indicated in charts.	Wrong tire pressure.	Inflate tires to correct air pressure.
	Inconsistent seed size.	Perform field check and adjust sprockets accordingly.
	Wrong sprockets.	Check chart for correct sprocket combination.
	Charts are approximate.	Slight variations due to wear in meter components and tire slippage due to field conditions may produce seed spacing variations.
	Stiff or worn drive chains.	Replace chains.
Scattering of seeds.	Planting too fast.	Reduce planting speed.
	Seed tube improperly installed.	Check seed tube installation.
	Seed tube worn or damaged.	Replace seed tube.
Seed tubes and/or openers plugging.	Allowing planter to roll backward when lowering.	Lower planter only when tractor is moving forward.
Inconsistent seed depth.	Rough seed bed.	Adjust down pressure springs. Reduce planting speed.
	Partially plugged seed tube.	Inspect and clean.
	Seed tube improperly installed.	Install properly.

BRUSH-TYPE SEED METER MAINTENANCE

60607-10a

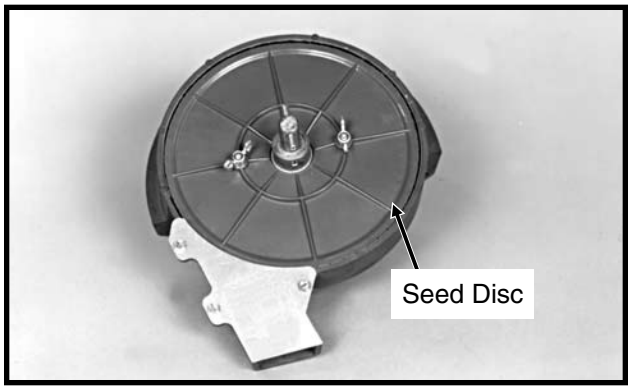

D04239911

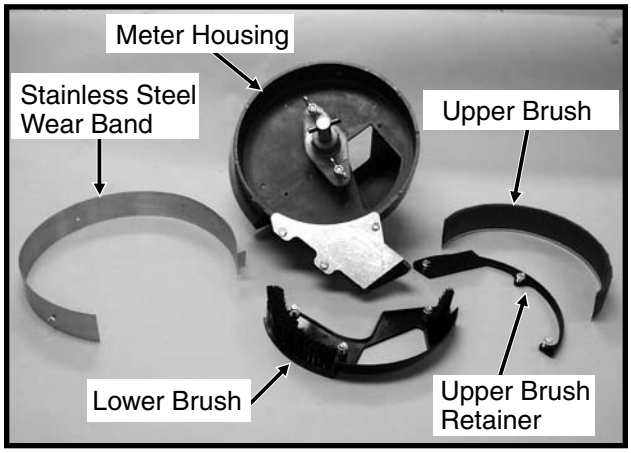

Only clean, high quality seed should be used for maximum meter accuracy. Damaged or cracked seed, hulls or foreign materials may become lodged in the upper brush and greatly reduce meter accuracy. It is suggested that the seed disc be removed daily, inspected and cleaned. Check for buildup of foreign material on the seed disc, particularly in the seed loading slots. Clean the disc by washing it with soap and water. Check for cracked seed, hulls, etc. lodged between the brush retainer and stainless steel wear band which can greatly reduce the accuracy of the meter because the upper brush will not be able to retain the seed in the seed disc pocket. Clean the brush areas of the meter housing thoroughly.

D04239912a

IMPORTANT: Replace hopper lids after hoppers are filled to prevent accumulation of dust or dirt in the seed meter which will cause premature wear.

Cleaning brush-type seed meter for storage:

1. Remove meter from seed hopper by removing the two thumbscrews which secure the meter to the hopper.
2. Remove seed disc and wash with soap and water and dry thoroughly.
3. Remove upper brush by removing the three hex head screws from the brush retainer and removing brush retainer and upper brush.
4. Remove the three hex head screws from the lower brush and remove lower brush and stainless steel wear band.
5. Wash all parts and meter housing with soap and water and dry thoroughly.
6. Inspect all parts for wear and replace worn parts.
7. Reassemble meter except for seed disc. **Meter should be stored in a rodent-free space with seed disc removed.**

Seed Disc Wear

HD112690(PLTR40b)

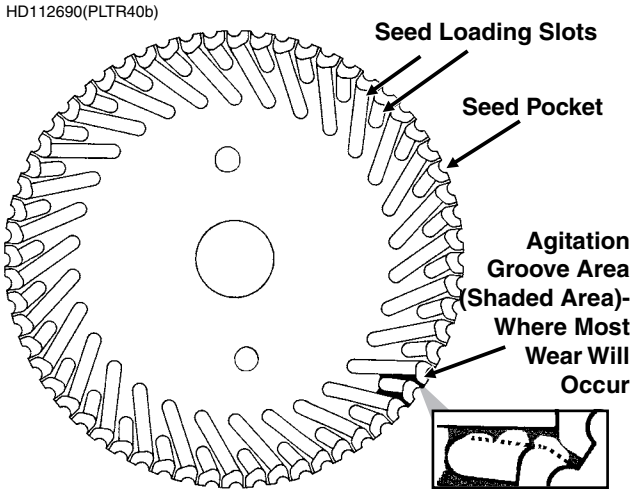

Most wear on the seed disc will be found in the agitation groove area (area between the seed loading slots). Wear will affect planting accuracy at high RPM. To measure for wear, lay a straight edge across the surface of the disc and measure the gap between the disc (at the agitation groove area) and the straight edge. If the agitation groove areas are worn in excess of .030" and accuracy starts to drop off at higher meter RPM, the seed disc should be replaced.

Estimated life expectancy of the seed disc under normal operating conditions should be approximately 200 acres per row. Severe operating conditions such as dust, lack of lubrication or abrasive seed coating could reduce life expectancy of the seed disc to under 100 acres per row.

Upper Brush

D12220403

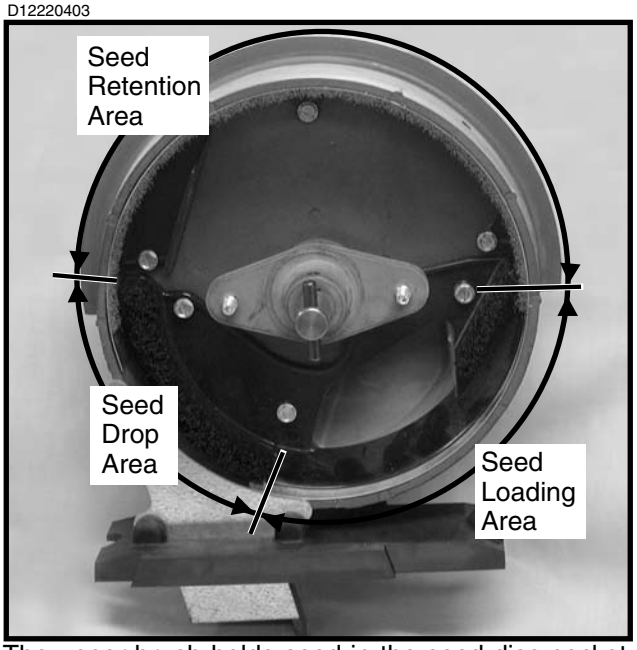

The upper brush holds seed in the seed disc pocket in the seed retention area.

The brush must apply enough pressure against the seed in the seed disc pocket as the disc rotates through the seed retention area to prevent the seed from dropping out of the disc pocket. A damaged spot, excessive wear on the brush or foreign material lodged in the brush may greatly reduce meter performance.

The upper brush should be replaced at approximately 120-400 acres per row of use or sooner if damage or excessive wear is found.

Installation Of Upper Brush

Position upper brush into inner perimeter of seed retention area. Make sure the base of the brush is tight against the bottom of the meter housing. Install brush retainer and three hex head screws. Tighten center screw first, left screw second and right screw last.

NOTE: Use GD11122 upper brush retainer when using soybean and cotton discs. Use GD8237 upper brush retainer when using milo/grain sorghum discs. GD11122 brush retainer shown.

LF212299-13a

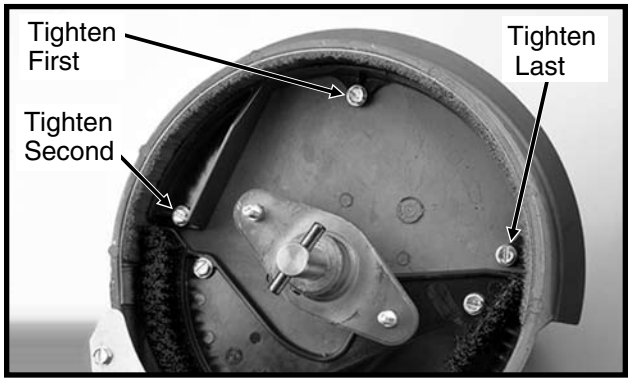

Stainless Steel Wear Band

D04239917a

The purpose of the stainless steel wear band is to protect the meter housing from wear. The band is .030" thick and should be replaced when approximately .020" of wear is found in the primary area of wear. If the wear band is allowed to wear through or if the meter is used without the wear band in place, damage to the meter housing may occur.

Estimated life expectancy of the stainless steel wear band is 240-800 acres per row.

Lower Brush

D04239911

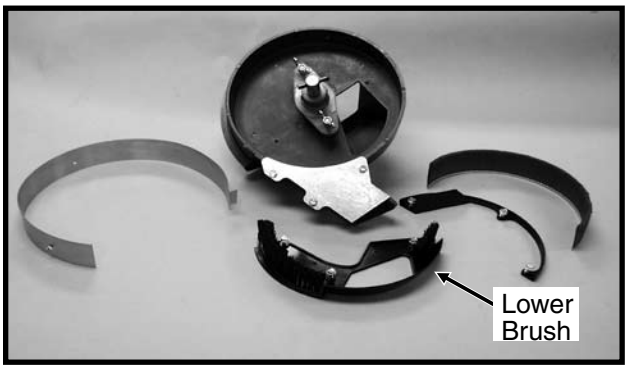

The lower brush has several functions. One function is to move seed down the seed loading slots to the seed pockets. The second function is to isolate seed in the reservoir from entering the seed tube and a third is to clean the seed loading slots.

Estimated life expectancy of the lower brush is 240-800 acres per row. The lower brush should be replaced if the bristles are deformed or missing or if there are cracks in the brush retainer.

BRUSH-TYPE SEED METER TROUBLESHOOTING

PROBLEM	POSSIBLE CAUSE	SOLUTION
Low count.	Meter RPM too high.	Reduce planting speed.
	Seed sensor not picking up all seeds dropped.	Clean seed tube. Switch meter to different row. If problem stays with same row, replace sensor.
	Lack of lubrication causing seeds not to release from disc properly.	Use graphite or talc as recommended.
	Seed size too large for seed disc being used.	Switch to smaller seed or appropriate seed disc. See “Brush-Type Seed Meter” for proper seed disc for size of seed being used.
	Seed treatment buildup in meter.	Reduce amount of treatment used and/or thoroughly mix treatment with seed. Add talc.
Low count at low RPM and higher count at higher RPM.	Foreign material lodged in upper brush.	Remove seed disc and remove foreign material from between brush retainer and bristles. Clean thoroughly.
	Worn upper brush.	Replace. See “Maintenance”.
Low count at higher RPM and normal count at low RPM.	Seed disc worn in the agitation groove area.	Replace disc. See “Maintenance”.
High count.	Seed size too small for seed disc.	Switch to larger seed or appropriate seed disc.
	Incorrect seed rate transmission setting. manual.	Reset transmission. Refer to proper rate chart in “Machine Operation” section of
	Upper brush too wide (fanned out) for small seed size.	Replace upper brush.
High count. (Milo/Grain Sorghum)	Incorrect brush retainer being used.	Make sure GD8237 brush retainer is installed to keep upper brush from fanning out.
Upper brush laid back.	Seed treatment buildup on brush.	Remove brush. Wash with soap and water. Dry thoroughly before reinstalling. See “Maintenance”.
	Buildup of foreign material at base of brush.	Remove brush retainer and brush. Clean thoroughly. Reinstall.

CLOSING WHEEL TROUBLESHOOTING

PROBLEM	POSSIBLE CAUSE	SOLUTION
Closing wheel(s) leave severe imprint in soil.	Too much closing wheel down pressure.	Adjust closing wheel pressure.
Closing wheel(s) not firming soil around seed.	Insufficient closing wheel down pressure.	Adjust closing wheel pressure. Severe no till conditions may require use of cast iron closing wheels.
“V” closing wheel running on top of seed furrow.	Improper centering.	Align. See “V Closing Wheel Adjustment”.
Single closing wheel not directly over seed.	Improper centering.	Align. See “Covering Discs/Single Press Wheel Adjustment”.

DRAG CLOSING ATTACHMENT

LF212299-18

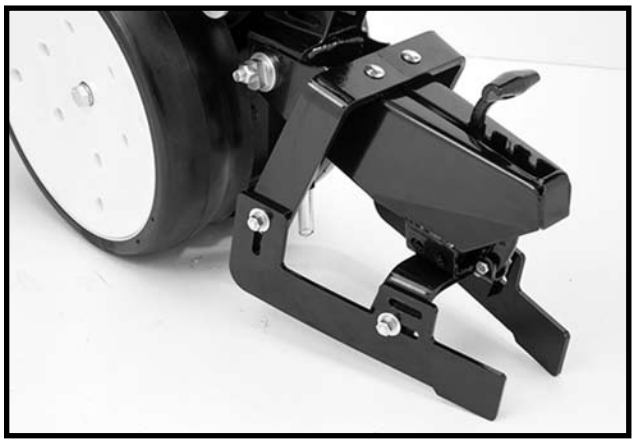

Prior to storage of the planter, inspect each drag closing attachment and replace any worn or broken parts. Check for loose hardware and tighten as needed.

GAUGE WHEEL ADJUSTMENT

To prevent an accumulation of dirt or trash, gauge wheels should lightly contact the opener blades. Gauge wheels and opener blades should turn with only slight resistance.

To adjust clearance between gauge wheels and opener blades, add or remove machine bushings between the shank and gauge wheel arm. Store remaining machine bushings between gauge wheel arm and flat washer on outer side of gauge wheel arm.

NOTE: It may be desirable to space gauge wheel further from blade when operating in sticky soils.

LF212199-2

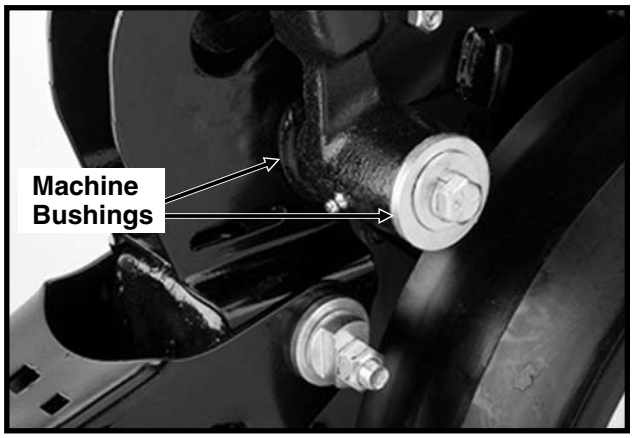

(RU113g)

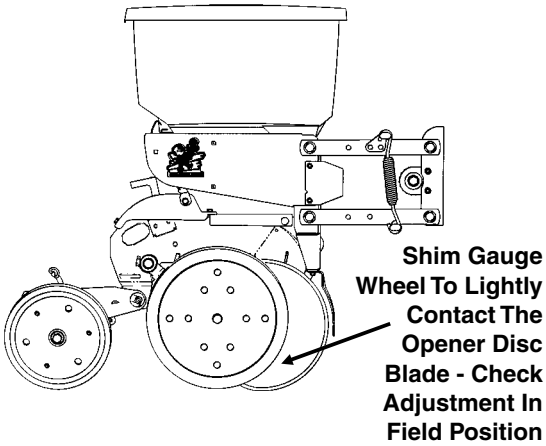

GAUGE WHEEL ARM BUSHING AND/OR SEAL REPLACEMENT

(RU113g)

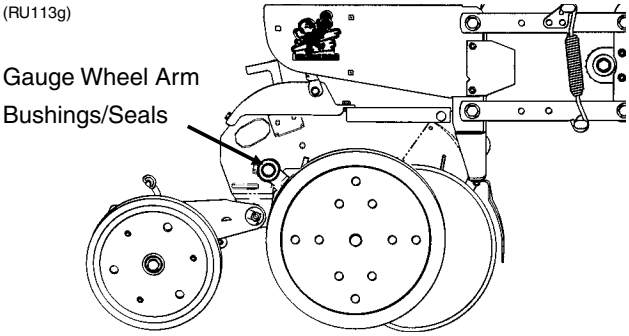

NOTE: A Gauge Wheel Arm Bushing And Seal Driver Kit (G1K296), for use in bushing and seal replacement, is available through your KINZE® Dealer.

To replace gauge wheel arm assembly bushing(s) and/or seal(s):

1. Remove gauge wheel from arm.
2. Remove the gauge wheel arm assembly from the shank assembly.
3. Remove seal and bushing and discard. Clean and dry inner bore.

(A7975/RU122)

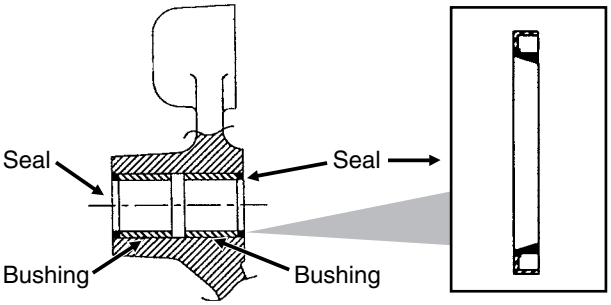

4. Drive/press replacement bushing inside bore of arm to a depth of .125" below flush.
5. Coat wiping edge of seal with grease.
6. Drive/press seal into place with lip to the outside as shown above.

   NOTE: Use extra care to protect the sealing lip during installation. Apply uniform pressure to assemble the seal into the bore of the arm. Never apply a direct hammer blow to the seal surface.

7. Inspect gauge wheel pivot spindle.
8. Reinstall gauge wheel arm assembly and gauge wheel.
   NOTE: Special machine bushing between gauge wheel arm and gauge wheel.
9. Shim for proper gauge wheel tire/disc blade clearance.
10. Lubricate with an SAE multipurpose grease.

GAUGE WHEEL ARM PIVOT SPINDLE REPLACEMENT

(RU113g)

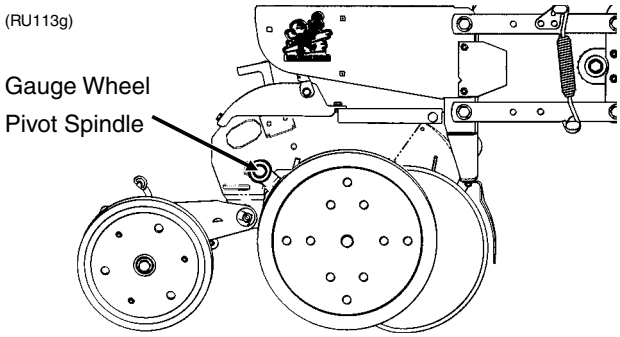

To replace gauge wheel pivot spindle:

1. Remove the gauge wheel and arm assemblies from the shank assembly.
2. Remove ½" x ¾" cap screw that locks the pivot spindle in place and remove the spindle.

D06189902

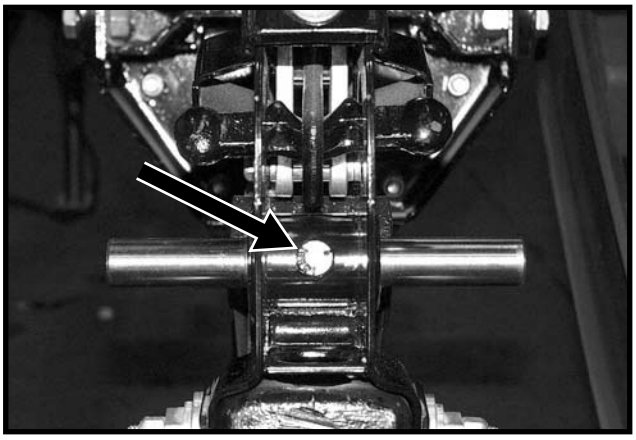

3. Install the replacement spindle and position as shown below. Exact centering is critical.

(A7966)

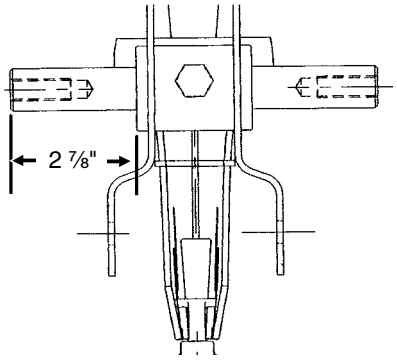

4. Install ½" x ¾" cap screw and torque to lock pivot spindle in place.
5. Install gauge wheel and arm assemblies. Shim for proper gauge wheel tire/disc blade clearance.

15" SEED OPENER DISC BLADE/ BEARING ASSEMBLY

Approximately 1" - 1 ½" of blade-to-blade contact should be maintained to properly open and form the seed trench. As the blade diameter decreases, due to wear, it will be necessary to relocate machine bushings from inside to outside to maintain approximately 1" - 1 ½" of contact.

NOTE: If proper blade-to-blade contact cannot be maintained after relocating machine bushings or if blade diameter wears below 14 ½", the blades should be replaced.

IMPORTANT: Excessive blade contact may result in premature disc opener bearing/hub failures and excessive wear on seed tube guard/inner scraper. When properly adjusted, if one blade is held in fixed position, the opposite blade should be able to be rotated with minimal force (Less than 5 pounds force at outer edge of blade).

(RU113g)

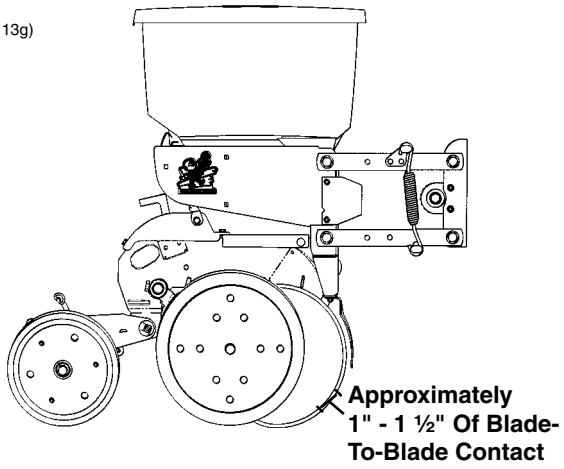

To replace disc blade/bearing assembly:

1. Remove gauge wheel.
2. Remove scraper.
3. Remove bearing dust cap.
4. Remove cap screw, washer and disc blade/bearing assembly. The machine bushings between the shank and disc blade are used to maintain the approximate 1" - 1 ½" of blade-to-blade contact.

IMPORTANT: Left hand side of opener uses a left hand threaded cap screw. DO NOT OVERTIGHTEN. Damage to shank threads will require replacement of row unit shank assembly.

5. Install machine bushing(s), new disc blade/bearing assembly, washer and cap screw. Torque ⅝"-11 Grade 5 cap screw to value shown in "Torque Values Chart".

   NOTE: Replace disc blades only with disc blades of equal thickness.

6. Replace bearing dust cap.
7. Install scraper.
8. Install gauge wheel.

It may be necessary to replace only the bearing if there is excessive endplay or if the bearing sounds or feels rough when the disc blade is rotated.

To replace bearing:

1. Remove gauge wheel, scraper, bearing cap, cap screw, washer and disc blade/bearing assembly.
2. Remove ¼" rivets from bearing housing to expose bearing.
3. After installing new bearing, install three evenly spaced ¼" cap screws into three of the six holes in the bearing housing to hold the bearing and bearing housing in place. Install rivets in the other three holes. Remove ¼" cap screws and install rivets in those three holes.
4. Reinstall disc blade/bearing assembly, washer and cap screw. Torque ⅝"-11 cap screw to value shown in "Torque Values Chart" at the beginning of this section.
5. Replace bearing dust cap.
6. Install scraper and gauge wheel.

SEED TUBE GUARD/INNER SCRAPER

The seed tube guard protects the seed tube and acts as the inner scraper for the seed opener disc blades.

Remove the seed tube and check for wear. Excessive wear on the seed tube indicates a worn seed tube guard. Replace the seed tube guard if it measures ⅝" or less at the lower end. A new seed tube guard measures approximately ⅞".

LF212199-12

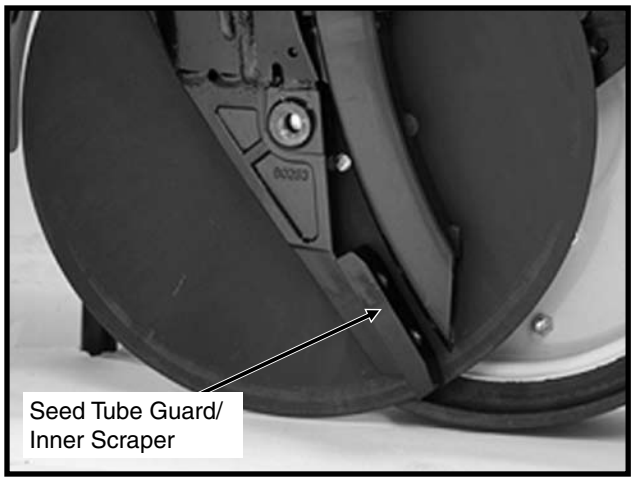

Shown With Gauge Wheel And Seed Opener Disc Blade Removed For Visual Clarity

IMPORTANT: No till planting or planting in hard ground conditions, especially when the planter is not equipped with no till coulters, and/or excessive blade-to-blade contact will increase seed tube guard wear and necessitate more frequent inspection and/or replacement.

To replace the seed tube guard, remove the seed tube and the two hex socket head cap screws which attach the seed tube guard. Hold the replacement seed tube guard centered between the seed opener disc blades. Install, but DO NOT tighten, the hex socket head cap screws. Using a clamp or vise-grip, squeeze the opener blades together in front of the seed tube guard. Tighten the seed tube guard retaining screws. Remove the clamps. The distance between the seed tube guard and opener blades should be equal on both sides. Reinstall seed tube.

IMPORTANT: Over tightening the hex socket head cap screws may damage the threads in the shank and require replacement of the shank. A seed tube guard that is worn excessively may allow the blades to wear into the row unit shank, also requiring replacement of the shank.

FRAME MOUNTED COULTER

LF083002101

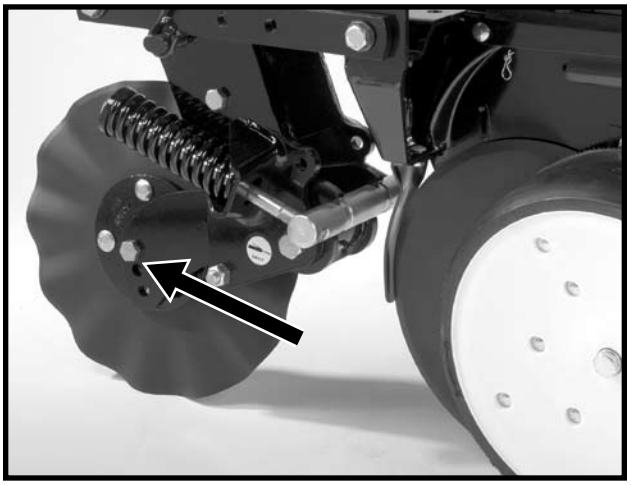

NOTE: Torque ⅝" spindle hardware to 120 ft. lbs.

See “Frame Mounted Coulter” in Row Unit Operation Section of this manual for depth and spring adjustment.

When the 16" diameter coulter blade (1" fluted, 1" bubbled or ¾" fluted) is worn to 14 ½" (maximum allowable wear), it should be replaced.

RESIDUE WHEELS (For Use With Frame Mounted Coulter)

LF083002102

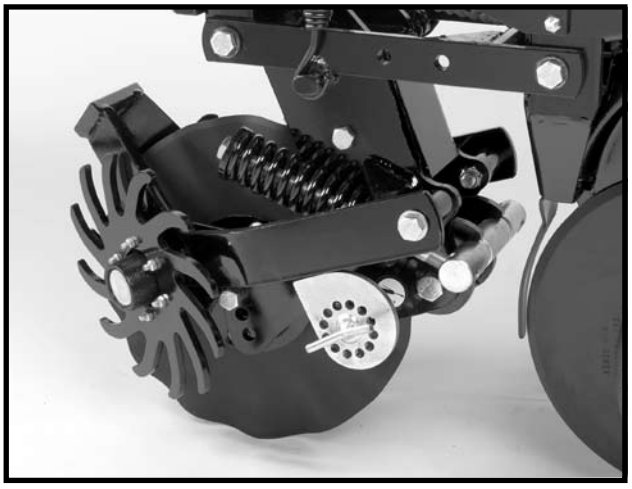

STYLE A

(RU154)

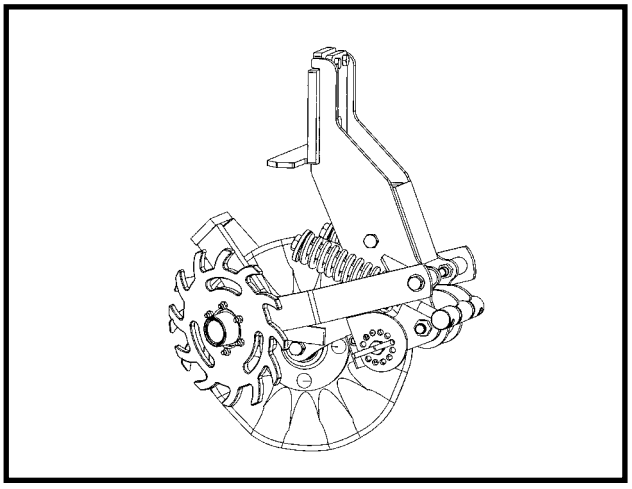

STYLE B

The wheel hub is equipped with sealed bearings. If a bearing sounds or feels rough when the wheel is rotated, replace the bearings.

ROW UNIT MOUNTED DISC FURROWER

LF212299-22

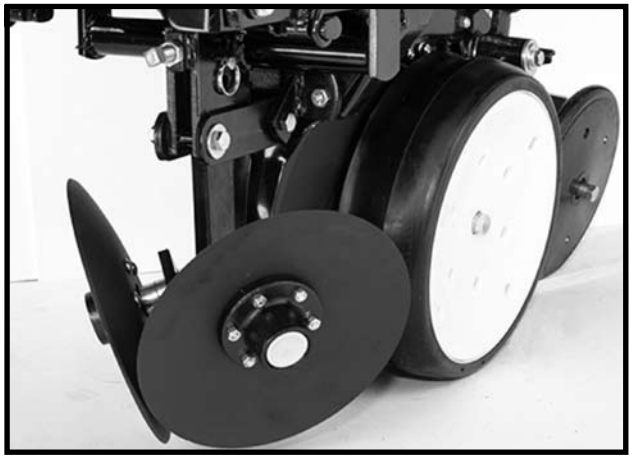

Lubricate the bushings in the support arm and mounting bracket at the frequency indicated in the Lubrication Section of this manual. Using a torque wrench, check each bolt for proper torque. If the bolt is loose, it should be removed and the bushing inspected for cracks and wear. Replace bushings as necessary. **Only hardened flat washers should be used. Replace damaged flat washers with proper part. Torque cap screws to 57 ft. lbs.**

The blade hubs are equipped with sealed bearings. If bearings sound or feel rough when the blade is rotated, replace the bearings.

When the 12" diameter blades (solid or notched) are worn to 11", they should be replaced.

ROW UNIT MOUNTED RESIDUE WHEEL

D101701113

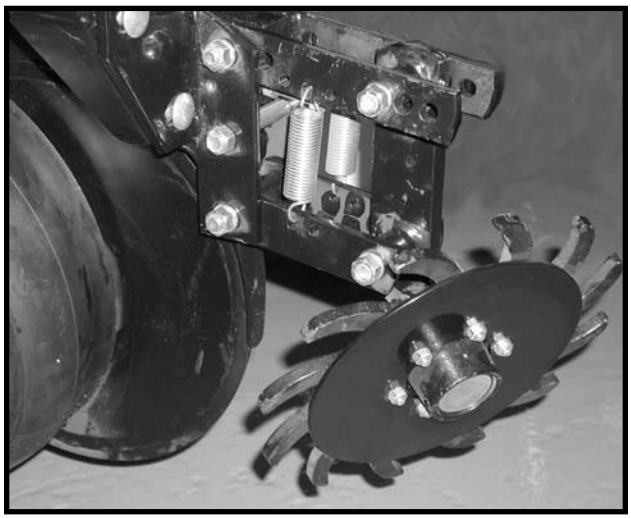

STYLE A

(A12685)

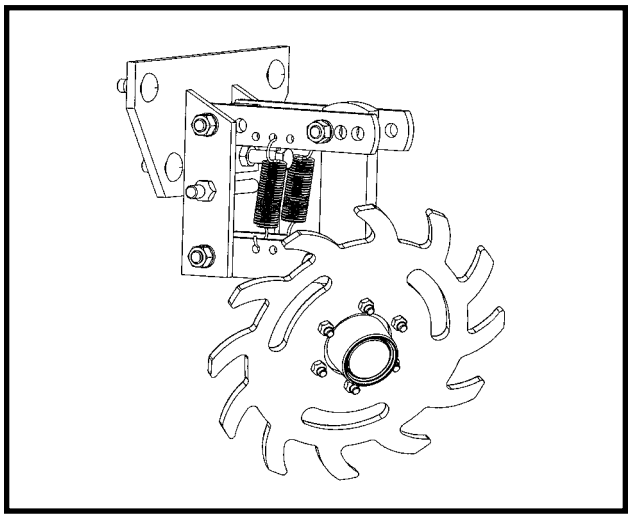

STYLE B

The wheel hub is equipped with sealed bearings. If a bearing sounds or feels rough when the wheel is rotated, replace the bearings.

ROW UNIT MOUNTED NO TILL COULTER

LF212299-19a

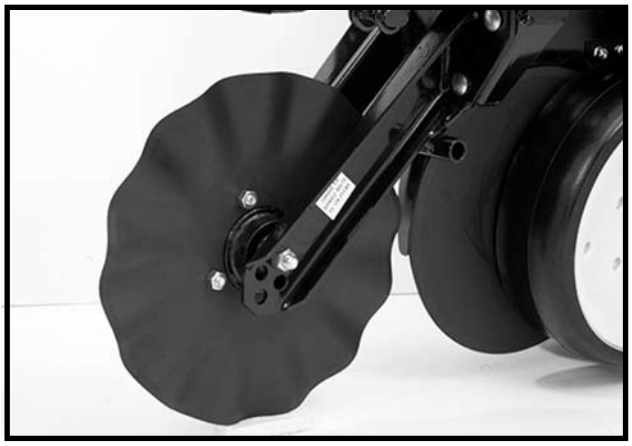

STYLE A (Two Sleeves For Installing Coulter Mounted Residue Wheels)

D05170706a

STYLE B (One Sleeve For Installing Coulter Mounted Residue Wheels)

Check periodically to be sure nuts and hardware are tightened to proper torque specification.

NOTE: Torque ⅝" spindle hardware to 120 ft. lbs.

Be sure the coulter is positioned square with the row unit and aligned in front of row unit disc opener.

The coulter blade can be adjusted to one of four settings. Initially the blade is set in the highest position. As the blade wears it can be adjusted to one of the three lower settings. See “Row Unit Mounted No Till Coulter” in Row Unit Operation section of this manual.

When the 16" diameter coulter blade is worn to 14½" (maximum allowable wear), it should be replaced.

COULTER MOUNTED RESIDUE WHEELS

LF212299-23

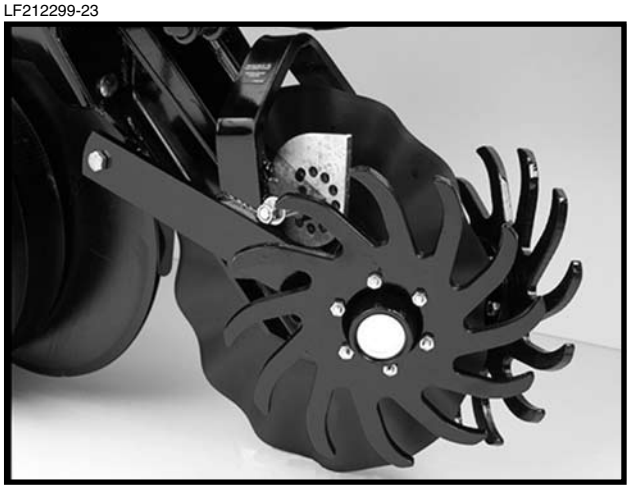

STYLE A - Used With Style A Row Unit Mounted No Till Coulter

D05170708a

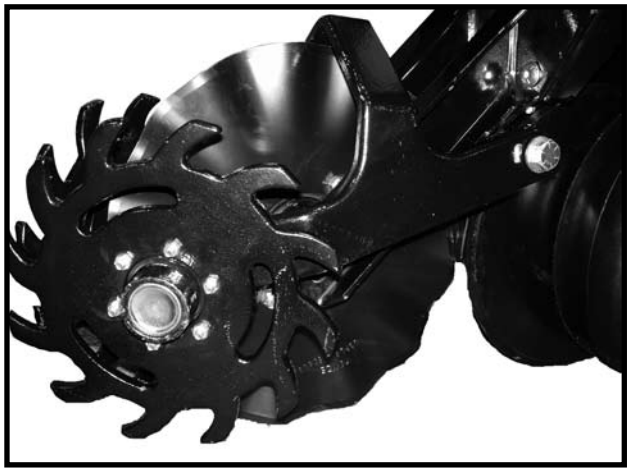

STYLE B - Used With Style B Row Unit Mounted No Till Coulter

The wheel hubs are equipped with sealed bearings. If bearings sound or feel rough when the wheel is rotated, replace the bearings.

SPRING TOOTH INCORPORATOR

Prior to storage of the planter, inspect each spring tooth incorporator and replace any worn or broken parts. Check for loose hardware and tighten as needed.

LF212299-26

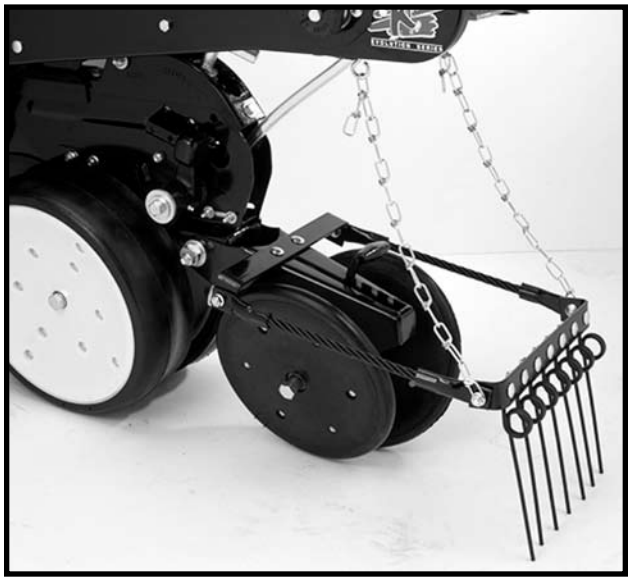

SOLENOID VALVE INSPECTION

The solenoid valve consists of a chambered body containing a cartridge valve which is activated by an electrical coil.

If the solenoid or solenoids fail to operate, first determine if the problem is electrical or hydraulic. If the valve is working properly, a click will be heard when the solenoid coil is energized. This will be the valve stem opening up. If no sound is heard, check the solenoid coil by touching the top of the coil housing with a metallic object such as a pliers or screwdriver. If the coil is working properly, the coil housing will be strongly magnetized when energized. If the voltage to the coil is low, the coil will be weakly magnetized when energized and no click will be heard.

VVB019(PLTR55)

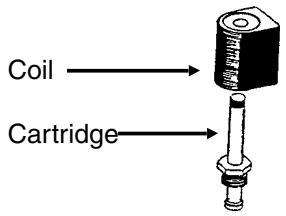

SOLENOID VALVE TROUBLESHOOTING

	POSSIBLE CAUSE	SOLUTION
None of the solenoids will operate.	Low voltage.	Must be connected to 12 volt DC only. Negative ground.
	Blown fuse.	Replace fuse in control console on tractor with AGC-15 amp only.
	Battery connection.	Clean and tighten.
	Wiring harness damaged.	Repair or replace.
One solenoid valve will not operate.	Bad switch.	Replace on control panel.
	Cut wire in harness.	Locate and repair.
PROBLEM	Bad coil.	Replace.
	Poor connection at coil.	Check.
Valve operating when not energized.	Valve stem stuck open.	Replace cartridge.
	O-ring leaking.	Install new O-ring kit.
	Foreign material under poppet.	Remove cartridge and clean.

FLOW CONTROL VALVE INSPECTION

VVB020(TWL28)

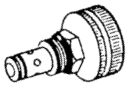

The flow control valves should be adjusted for row marker raise and lower speed as part of the assembly procedure or upon initial operation. If the valve fails to function properly or requires frequent adjustment, it should be removed for inspection. Check for foreign material and contamination on both the valve and the seating area of the valve body. Replace any components found to be defective.

PRESSURE RELIEF VALVE INSPECTION

VVB020(TWL29)

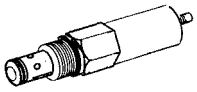

If the pressure relief valve fails to release the tongue lock or function properly, remove the valve from the valve block and check for foreign material or check to see if the O-ring is leaking internally. Replace if found to be defective.

LIFT CIRCUIT TROUBLESHOOTING

PROBLEM	POSSIBLE CAUSE	SOLUTION
Right wing raises faster than left wing. The right wing may even raise completely before the center frame and left wing start to raise. If the planter is loaded, the center frame and left wing may not be able to raise at all.	Master cylinder, located on front side of center post, leaking internally. NOTE: Make sure the lift system is completely rephased.	Repair master cylinder.
Left wing raises faster than right wing. The left wing may even raise completely before the center frame and right wing start to raise. If the planter is loaded, the center frame and right wing may not be able to raise at all.	Master cylinder, located on rear side of center post, leaking internally. NOTE: Make sure the lift system is completely rephased.	Repair master cylinder.
Center frame will raise, but wings do not.	Planter hydraulic circuit out of phase. Usually occurs when the planter is lowered from transport position.	Hold hydraulic lever in lowering position to give the hydraulic circuit more time to rephase.
	Solenoid valve in port V16 leaking.	Replace solenoid valve cartridge.
Center frame will continue to raise after the wing cylinders have reached full stroke when going to raised field position.	Solenoid valve in port V16 leaking.	Replace solenoid valve cartridge.
Planter will raise to raise field position, but will not raise to transport position.	Solenoid valve coil in port V16 is not energized.	Be sure control console switch is in “raise” position to energize solenoid coil in port V16. Check control console fuse by moving auxiliary switch to ON position. If red light comes on the fuse is OK. Return auxiliary to OFF position. Check for poor wire connection or damaged wire and repair. Solenoid valve coil is defective. All solenoid valves used on the planter are the same. Switch the solenoid coil with one you know is working. If this cures the problem, replace defective coil.

LIFT CIRCUIT TROUBLESHOOTING (Continued)

PROBLEM	POSSIBLE CAUSE	SOLUTION
(Continued) Planter will raise to raised field position, but will not raise to transport position.	Solenoid valve cartridge in port V16 is stuck closed.	All solenoid valves used on the planter are the same. Switch the solenoid cartridge with one you know is working. If this cures the problem, replace defective cartridge.
Left wing lowering slower than center frame and right wing. If hydraulic lever is held in lowering position, the left wing cylinder will attempt to extend.	Check valve in port V17 leaking internally.	Remove check valve in port V17 and inspect for foreign material in valve and remove if possible. Replace check valve. If above fails, switch check valve in port V17 with check valve in port V15. If problem moves or switches to right wing, replace defective check valve.
Right wing lowering slower than center frame and left wing. If hydraulic lever is held in lowering position, the right wing cylinder will attempt to extend.	Check valve in port V15 leaking internally.	Remove check valve in port V15 and inspect for foreign material in valve and remove if possible. Replace check valve. If above fails, switch check valve in port V15 with check valve in port V17. If problem moves or switches to right wing, replace defective check valve.
Planter will not raise or raises slowly.	Tractor may have hydraulic problem.	Switch remote outlets being used. Repair tractor hydraulics.
	Planter may be overloaded with hopper extensions and/or extra fertilizer tanks, coulters or other non-KINZE® attachments.	Remove weight.
	Center pivot wear pads may be adjusted too tight and are binding on the post.	Adjust pads.
	Relief valves on hitch leaking. Valves should hold 2500 PSI (±50 PSI).	Remove and inspect relief valve cartridge. Check for blown O-rings. Replace bad cartridge.
Planter will not rephase.	All cylinders not completely retracted. Caused by mechanical interference on or between planter frame and wheel lift module.	Remove interference.
	Center cylinders not retracting completely.	Lower planter and hold hydraulic lever in lower position to rephase system. Lower cylinder pins must be free to rotate in this position. If pins are tight, adjust cylinder clevises

TONGUE CYLINDER CIRCUIT TROUBLESHOOTING

PROBLEM	POSSIBLE CAUSE	SOLUTION
Tongue cylinder will not extend, but will retract.	No power to solenoid valve coil in port V10 and/or V14. Both must be energized.	Check wiring between control console and solenoid coils looking for damaged wires and poor connections.
	Solenoid valve coil defective.	Switch coil from port V13 with V10. If tongue still will not extend, switch coil from V14 with V13. It will not be necessary to remove any of the wire connections to the solenoid. All three of these solenoids are normally energized when the tongue switch is energized. Replace defective coil.
	Solenoid valve cartridges in port V10 and/or V14 stuck closed.	Switch cartridge from port V10 with cartridge in port V13. If tongue cylinder retracts, replace defective cartridge from port V10. If problem continues, switch cartridge from port V14 with cartridge in port V13. Replace defective cartridge. Replace or adjust pressure relief valve.
Tongue cylinder will not extend but tongue lock cylinder extends.	Pressure relief valve in port V11 stuck closed or pressure setting too high. (Valve is factory set to open at 1000 PSI.)	To adjust, loosen lock nut and turn counter clockwise to decrease pressure. Replace or adjust pressure relief valve.
Tongue hook does not release before the tongue starts to extend.	Solenoid valve cartridge in port V11 stuck open or pressure setting too low. (Valve is factory set to open at 1000 PSI.)	To adjust, loosen lock nut and turn clockwise to increase pressure. Switch coil from port V13 with coil from
Tongue cylinder will not retract, but will extend.	Solenoid valve coil in port V13 defective.	port V14. If coil from port V13 is bad, the tongue will extend but not retract. Replace defective coil. Switch cartridge from port V13 with
	Solenoid valve cartridge in port V13 stuck closed.	cartridge from port V14. If cartridge is bad, the tongue will extend but not retract. Replace defective cartridge. Replace solenoid valve cartridge.
Tongue extends with the switch off.	Solenoid valve cartridge in port V10 and V14 stuck open.	Replace solenoid valve cartridge.
Tongue retracts with the switch off.	Solenoid valve cartridge in port V13 stuck open.	Pressure check latch and tongue
Tongue latch releases. Tongue extends slowly while planting.	Latch cylinder or tongue cylinder leaking internally.	cylinders. Repair leaking cylinder(s).

ROTATION CYLINDER CIRCUIT TROUBLESHOOTING

PROBLEM	POSSIBLE CAUSE	SOLUTION
Cylinder does not extend, but will retract.	Solenoid valve coil in port V12 defective.	Switch coil from port V12 with coil in port V9. If cylinder extends but will not retract, replace defective coil from port V12.
	Solenoid valve cartridge in port V12 is stuck closed.	Switch cartridge from port V12 with cartridge in port V9. If cylinder extends but will not retract, replace defective cartridge from port V12.
Cylinder does not retract, but will extend.	Solenoid valve coil in port V9 defective.	Switch coil from port V9 with coil in port V12. If cylinder extends but will not retract, replace defective coil from port V9.
	Solenoid valve cartridge in port V9 is stuck closed.	Switch cartridge from port V9 with cartridge in port V12. If cylinder extends but will not retract, replace defective cartridge from port V9.

WING LOCK CYLINDER CIRCUIT TROUBLESHOOTING

PROBLEM	POSSIBLE CAUSE	SOLUTION
Cylinders will not extend or retract.	No power to the solenoid valve coils.	Auxiliary switch may be in the ON position. Must be in OFF position. Check fuse at control console. Replace fuse with 15 amp type AGC if blown. Check for poor wire connection or damaged wire. Repair as required.
Cylinders will not extend.	Solenoid valve coil in port V3 not energized.	Check for power to coil. Check coil ground wire. If OK, switch coil from port V3 with coil from port V4. If cylinders extend but will not retract, replace defective coil.
	Solenoid valve cartridge in port V3 stuck closed.	Switch cartridge in port V3 with cartridge in port V4. If cylinders extend but will not retract, replace defective cartridge.
Cylinders will not retract.	Solenoid valve coil in port V4 not energized.	Check for power to coil. Check coil ground wire. If OK, switch coil from port V4 with coil from port V3. If cylinders retract but will not extend, replace defective coil.
	Solenoid valve cartridge in port V4 stuck closed.	Switch cartridge in port V4 with cartridge in port V3. If cylinders retract but will not extend, replace defective cartridge.
Cylinders retract with the switch off.	Solenoid valve cartridge in port V4 stuck open.	Replace solenoid valve cartridge.
Cylinders extend with the switch off.	Solenoid valve cartridge in port V3 stuck open.	Replace solenoid valve cartridge.

ROW MARKER OPERATION TROUBLESHOOTING

PROBLEM	POSSIBLE CAUSE	SOLUTION
Right marker lowering slower than left marker.	Solenoid valve cartridge in port V1 not opening completely.	Switch cartridge with one in port V2. If problem follows cartridge, replace cartridge.
	Hose pinched or collapsed.	Inspect hose routing. Replace or repair hoses as required.
Left marker lowering slower than right marker.	Solenoid valve cartridge in port V2 not opening completely.	Switch cartridge with one in port V1. If problem follows cartridge, replace cartridge.
	Hose pinched or collapsed.	Inspect hose routing. Replace or repair hoses as required.
Both markers lowering.	Solenoid valve cartridge stuck open. If marker switch is in the left marker position, the right cartridge (V1) is defective. If the marker switch is in the right marker position, the left cartridge (V2) is defective.	Replace solenoid valve cartridge.
Neither marker will lower.	Blown fuse.	Check red light on control console. It should be on if switch is on. If light is not on, switch to opposite marker position. If light comes on, switch may be defective. Replace switch. Otherwise replace fuse.
	Coils at V1 and V2 not energized.	Poor ground on wire, bad wire connection or damaged wire. Repair as required.
	Marker flow control valve closed too far.	See Operation Section for adjustment.
Neither marker will raise.	Marker flow control valve closed too far.	See Operation Section for adjustment.
Right marker will not lower.	Solenoid coil in port V1 not energized.	Check switch on control console. Replace if defective. Check coil ground wire. Check for poor connection or damaged wire.
	Solenoid cartridge in port V1 stuck closed.	Switch cartridge with one on the planter you know is operating properly. If right marker lowers, replace defective cartridge.
Left marker will not lower.	Solenoid coil in port V2 not energized.	Check switch on control console. Replace if defective. Check coil ground wire. Check for poor connection or damaged wire.
	Solenoid cartridge in port V2 stuck closed.	Switch cartridge with one on the planter you know is operating properly. If left marker lowers, replace defective cartridge.
Markers traveling too fast and damaging rubber stop on transport stands and/or damaging pivot at rod end of marker cylinders.	Marker transport stand not adjusted correctly to allow marker cushion cylinders to operate as designed.	See “Row Marker Transport Stand Adjustment”.
	Marker flow control valve out of adjustment.	See Operation Section for adjustment.

ROW MARKER TRANSPORT STAND ADJUSTMENT

It is critical that the row marker transport stands are adjusted correctly to allow the marker cushion cylinders to function properly.

To adjust the transport stands:

1. Raise markers to transport position.
2. Loosen mounting hardware to allow transport stands to drop down or remove transport stands.
3. With tractor engine shutoff, release hydraulic pressure on marker cylinders.
4. Locate transport stands so marker arm rests lightly on transport stand. When the transport stands are correctly adjusted the pin at the rod end of the cylinder should be loose enough to rotate and move back and forth in the mounting slot.

A7102-1(TWL104)

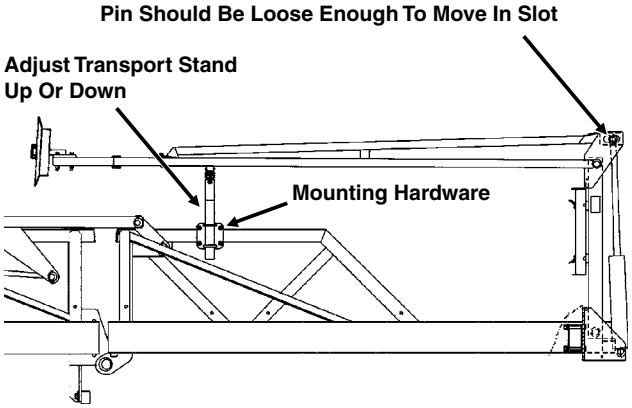

ROW MARKER BEARING LUBRICATION OR REPLACEMENT

1. Remove marker blade.
2. Remove dust cap from hub.
3. Remove cotter pin, nut and washer.
4. Slide hub from spindle.
5. Remove bearings and cups and discard if bearings are being replaced. Clean hub and dry. Remove bearings only and not cups if repacking.
6. Press in new bearing cups with thickest edge facing in. (Bearing replacement procedure only.)
7. Pack bearings with heavy duty wheel bearing grease thoroughly forcing grease between roller cone and bearing cage. Also fill the space between the bearing cups in the hub with grease.
8. Install rubber seal into grease seal. Place inner bearing in place and press in new rubber seal/ grease seal.
9. Clean spindle and install hub.
10. Install outer bearing, washer and slotted hex nut. Tighten slotted hex nut while rotating hub until there is some drag. This assures that all bearing surfaces are in contact. Back off slotted nut to nearest locking slot and install cotter pin.
11. Fill dust caps approximately ¾ full of wheel bearing grease and install on hub.
12. Install blade and dust cap retainer on hub and tighten evenly and securely.

(PLTR45/PLTR99/PLTR98/PLTR102)

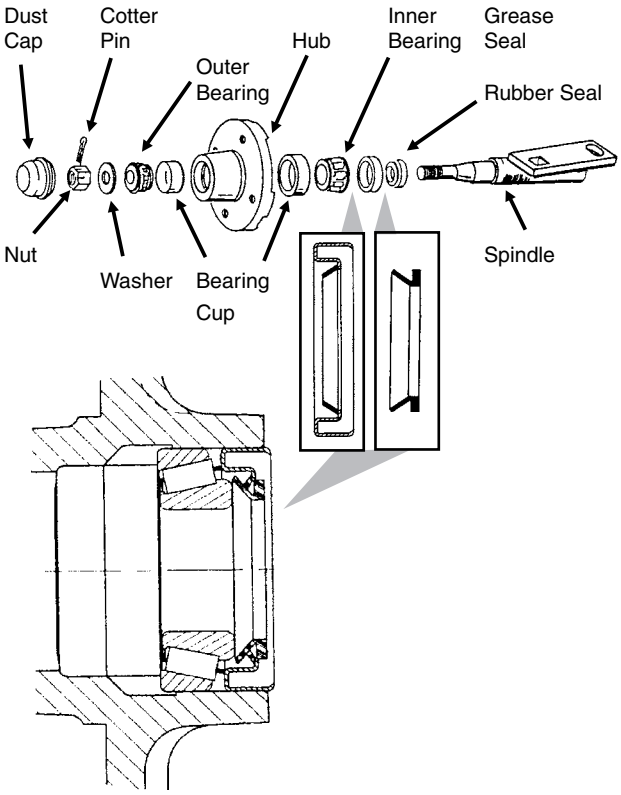

WHEEL BEARING LUBRICATION OR REPLACEMENT

NOTE: Each transport wheel hub is equipped with a grease fitting for lubrication.The below procedure is used only for bearing replacement.

1. Raise tire clear of ground and remove wheel.

2. Remove double jam nuts and slide hub from spindle.

3. Remove bearings, seals (Where Applicable) and cups and discard if bearings are being replaced. Clean hub and dry. Remove bearings only and not cups if repacking.

4. Press in new bearing cups with thickest edge facing in. (Bearing replacement procedure only.)

5. Pack bearings with heavy duty wheel bearing grease thoroughly forcing grease between roller cone and bearing cage. Also fill the space between the bearing cups in the hub with grease.

6. Place inner bearing and seal (If Applicable) in place.

7. Clean spindle and install hub.

8. Install outer bearing, seal (If Applicable) and stepped nut. Tighten jam nut while rotating hub until there is some drag. This assures that all bearing surfaces are in contact. Back off jam nut ¼ turn or until there is only slight drag when rotating the hub. Install second jam nut to lock against first.

9. Install wheel on hub and tighten evenly and securely. Torque wheel bolts to specified torque.

(EF35e/PLTR56)

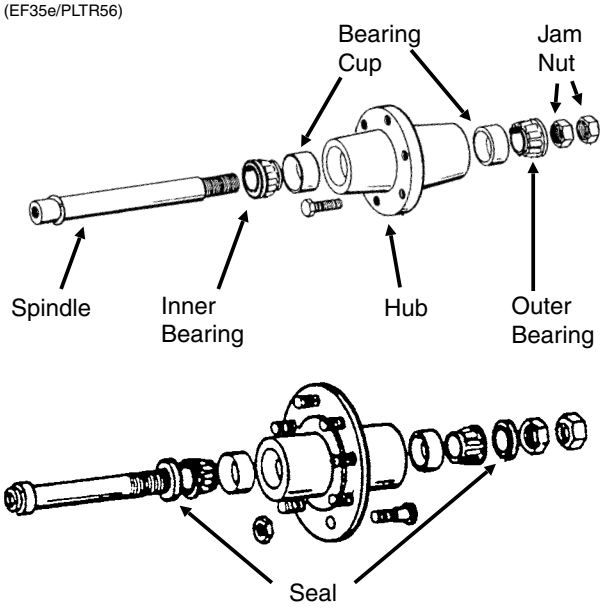

WEAR PAD REPLACEMENT AND ADJUSTMENT

(TWL193c)

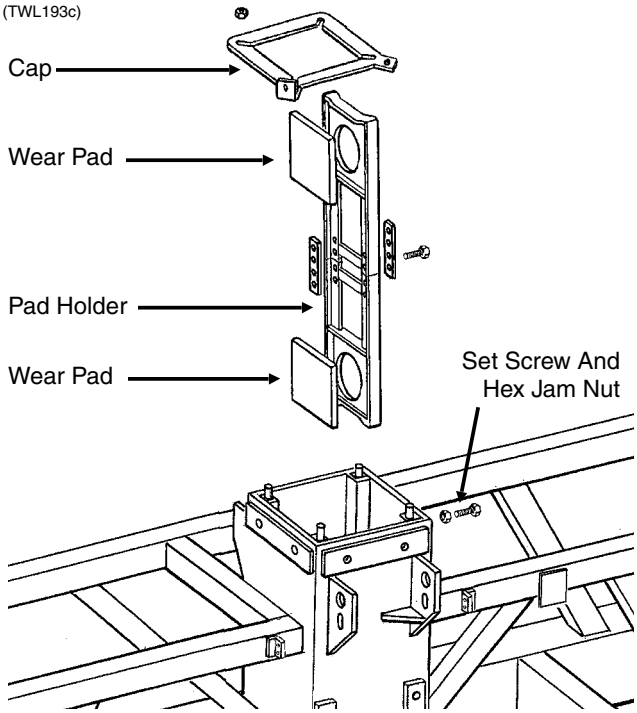

The center section of the planter is contructed around a steel tubular frame with four wear pad assemblies that ride against a stainless steel clad center post. Each wear pad assembly includes a pad holder and two wear pads. The wear pads are held by the pad holder and locked in place by ¾" set screws and hex jam nuts.

Inspect for wear and check pad adjustment annually to ensure the center section is stabilized and the planter tracks properly. Replace any broken or missing adjustment set screws. When properly adjusted the pads should make full contact with the center post with light contact. Too much preload on the pads will cause the hydraulic lift pressure to be higher than necessary or will not allow the planter to raise when the planter is loaded.

WARNING: Always install all safety lockup devices before working under the unit.

To check adjustment and wear, position the planter on a level surface. Raise the planter to the raised field position. Visually check the four upper wear pads. Each wear pad should lightly contact the stainless steel clad center post. The maximum allowable gap between the plastic wear pad and the stainless steel post, when checked using a thickness gauge, should be no more than .060". Raise the planter to the raised transport position, install all safety lockups and visually check the four lower wear pads. Maximum allowable gap on the lower pads is .060".

(TWL109b)

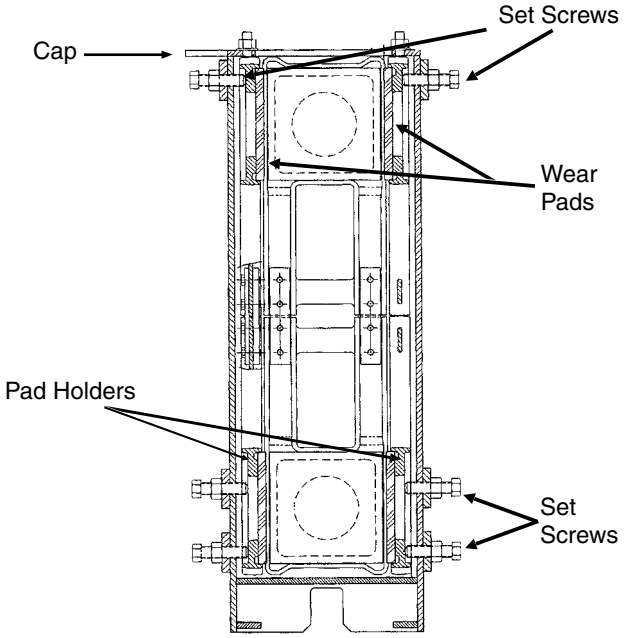

<u>If adjustment is necessary</u> proceed as follows: (a) Lower the planter to field operation position. It may be necessary to the loosen cap mounting nuts to allow wear pad adjustment. (b) Loosen the necessary hex jam nuts. (c) Tighten set screws until the wear pad lightly contacts the stainless steel clad center post. DO NOT OVER TIGHTEN. (d) Tighten hex jam nuts. (e) Recheck clearance. If clearance is not to specifications, repeat adjustment steps. (f) Torque hex jam nuts to 200 ft. lbs. Tighten cap mounting bolts if applicable.

NOTE: If exposed portion of wear pad is worn to less than ⅛" as shown below, replace the wear pad.

(TWL149a)

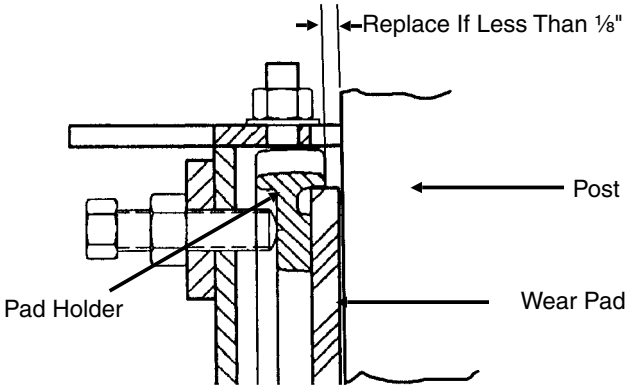

If major adjustment or replacement is necessary proceed as follows: (a) Loosen cam rollers as shown below so they move freely. (b) Lower the planter to field operation position and release wing locks. (c) Eliminate all uplift on planter frame by backing off row unit down pressure springs and uplift on any other planter attachments.

D01190716

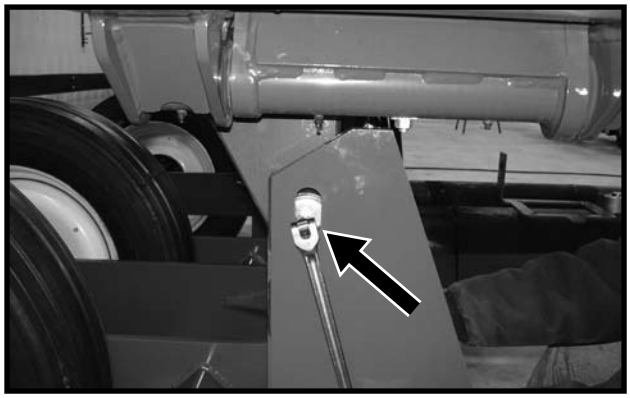

For pad adjustment only (d) Check position of center frame to axle cam roller guides. Gap between guides and frame should be the same side to side. Gap on the back sides of the roller guide should be equal on both sides.Final adjustment will be done later. (e) Loosen the four cap mounting nuts as shown below.(f) Loosen the hex jam nuts and use the pad set screws to position the frame to center correctly. (g) To adjust the pads, the pad set screws should be drawn tight, backed off and turned in until there is light contact with the pad holder. (h) Tighten hex jam nuts. (i) Torque hex jam nuts to 200 ft. lbs. (g) Tighten cap mounting nuts. (h) Reset row unit down pressure and other attachments from STEP c.

IMPORTANT: DO NOT OVERTIGHTEN WEAR PADS. OVER TIGHTENING WILL CAUSE PREMATURE WEAR AND EXCESSIVE HYDRAULIC LIFT PRESSURES.

D01190745

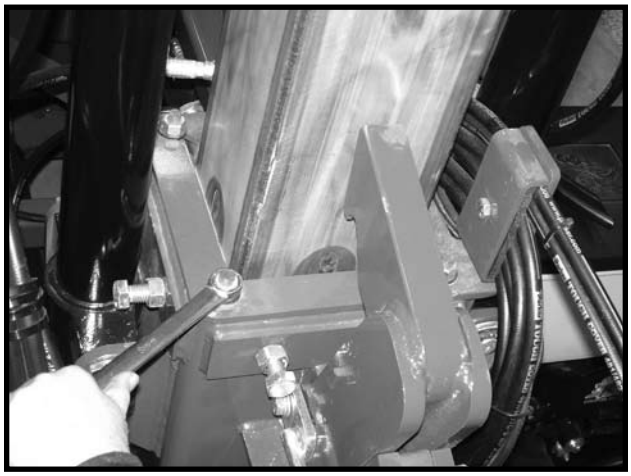

For pad replacement (d) As shown below, remove safety hook, disconnect hydraulic hose, remove nut on bulkhead fitting and remove fitting from cap..

D01190729

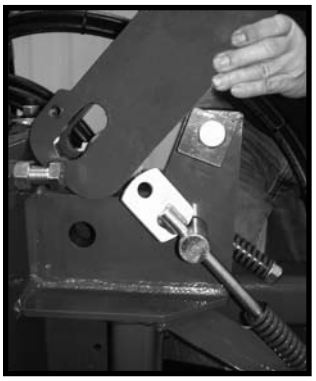

D01190725

(e) Loosen the four cap mounting nuts and remove pad holder cap. (f) Loosen the pad hex jam nuts, back the pad screws our and remove the four pad holder assemblies as shown below.

D01190737

(g) Remove old pads and install new pads. NOTE: Apply a small amount of weather stripping adhesive to hold the pads in place while the pad holder is being reinstalled.

D01190739

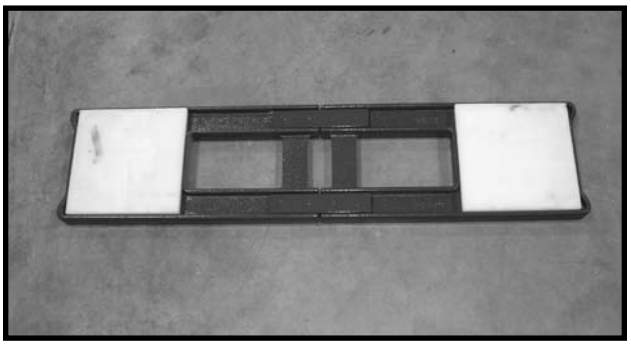

(h) To adjust the pads, the pad set screws should be drawn tight, backed off and turned in until there is light contact with the pad holder. (i) Tighten hex jam nuts. (j) Torque hex jam nuts to 200 ft. lbs.

IMPORTANT: DO NOT OVERTIGHTEN WEAR PADS. OVER TIGHTENING WILL CAUSE PREMATURE WEAR AND EXCESSIVE HYDRAULIC LIFT PRESSURES.

(k) Reinstall cap and tighten cap mounting nuts. (l) Reinstall hydraulic hose, fittings and safety hook.

D01190744

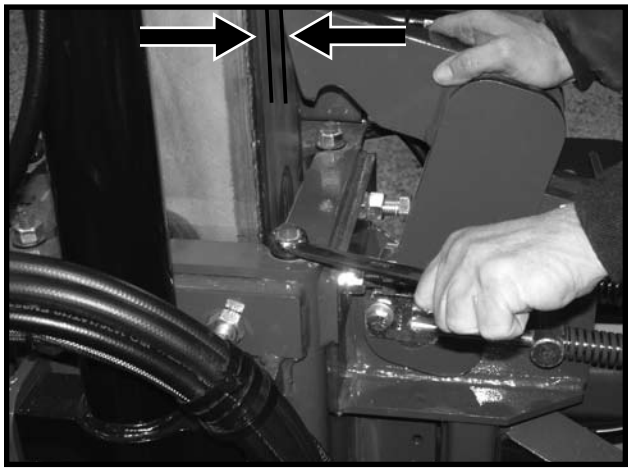

(m) Adjust stop on safety hook. Maximum clearance should be ½" and minimum clearance ⅛" as shown above.

D01190727

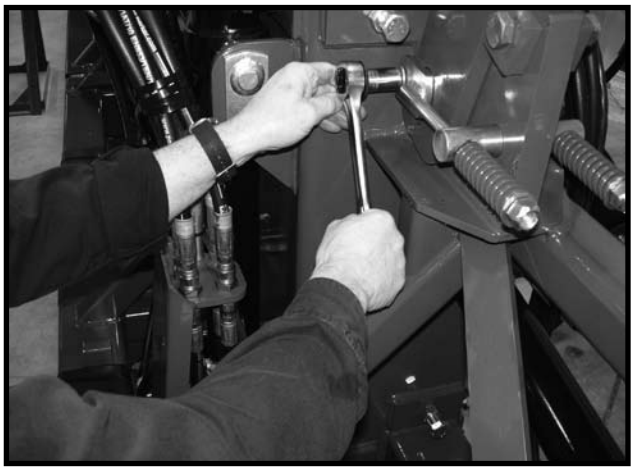

(n) Rotate cam roller against front guide and tighten to 200 ft. lbs. Make sure gap between roller guide and center frame are equal on both sides. (o) Raise planter out of the roller guides and lower back down into roller guides to be sure the roller guides operate smoothly. If not, adjust the roation cylinder rod as shown below.

D01190731

D01190732

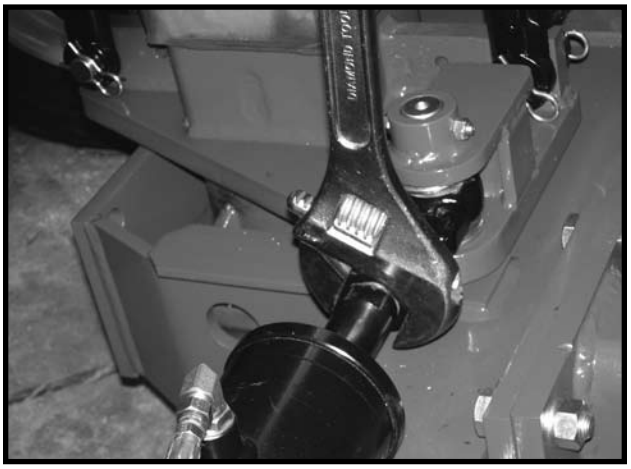

(p) Reset row unit down pressure and other attachments from STEP c.

PISTON PUMP STORAGE

IMPORTANT: KEEP AIR OUT OF PUMP! This is the only way to prevent corrosion. Even for short periods of storage, the entrance of air into the pump, will cause RAPID AND SEVERE CORROSION.

Overnight Storage

SUSPENSION FERTILIZER must be flushed from the pump for ANY storage period.

Winter Storage

1. Flush pump thoroughly with 5 to 10 gallons of fresh water and circulate until all corrosive salts are dissolved in the pump.
2. With the pump set on 10, draw in a mixture of half diesel fuel and half 10 weight oil until the discharge is clean. Then plug inlet and outlet.

NGP7055

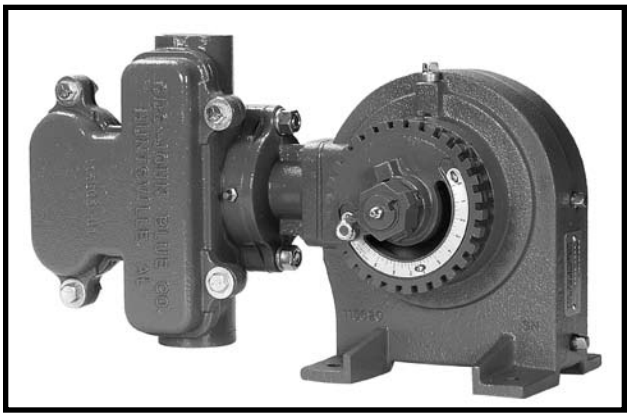

PISTON PUMP TROUBLESHOOTING

PROBLEM	POSSIBLE CAUSE	SOLUTION
Pump hard or impossible to prime.	Valves fouled or in wrong place.	Inspect and clean valves.
	Air leak in suction line.	Repair leak.
	Pump set too low.	Adjust pump setting.
	Packing washers worn out.	Replace.
Low metering.	Valves fouled or in wrong place.	Inspect and clean valves.
	Air leak in suction line.	Repair leak.
	Pump set too low.	Adjust pump setting.
	Broken valve spring.	Replace spring.
Over meters.	Broken discharge valve spring.	Replace spring.
	Trash under valves.	Inspect and clean valves.
	Improper rate setting.	Adjust pump setting.
Leaks through when stopped.	Broken discharge valve spring.	Replace spring.
	Trash under valves.	Inspect and clean valves.
Fertilizer solution leaking under stuffing box.	Packing washers worn out.	Replace.
Pump using excessive oil.	Oil seals or O-ring worn and leaking.	Replace.
Pump operates noisily.	Crankcase components worn excessively.	Inspect and replace if necessary.

PREPARATION FOR STORAGE

Store the planter in a dry sheltered area if possible.

Remove all trash that may be wrapped on sprockets or shafts and remove dirt that can draw and hold moisture.

Clean all drive chains and coat with a rust preventative spray, or remove chains and submerge in oil.

Lubricate planter and row units at all lubrication points.

Inspect the planter for parts that are in need of replacement and order during the “off” season.

Make sure all seed and hoppers are empty and clean.

Clean seed meters and store in a rodent-free, dry area.

Remove seed discs from brush-type seed meters, clean and store meters with discs removed.

Disassemble, clean and grease all U-joint slides.

Grease or paint disc openers/blades and row marker disc blades to prevent rust.

Flush liquid fertilizer tanks, hoses and metering pump with clean water. See “Piston Pump Storage” if applicable.

ELECTRICAL WIRING DIAGRAM FOR LIGHT PACKAGE

(WGN66a/A9202a)

STYLE A - Machines Equipped With Double Light Assemblies Only

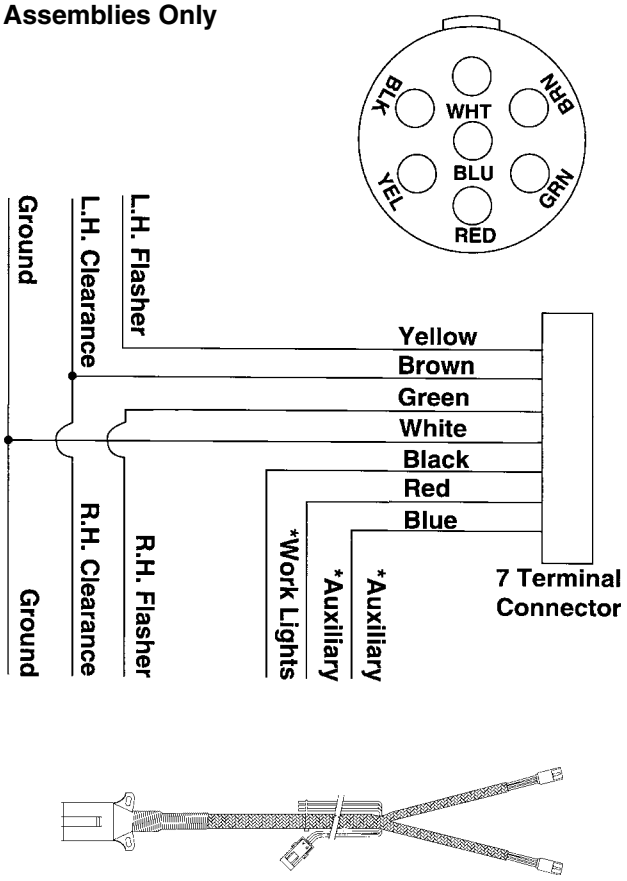

(WGN66b/A9201a)

STYLE B - Machines Equipped With Single And Double Light Assemblies

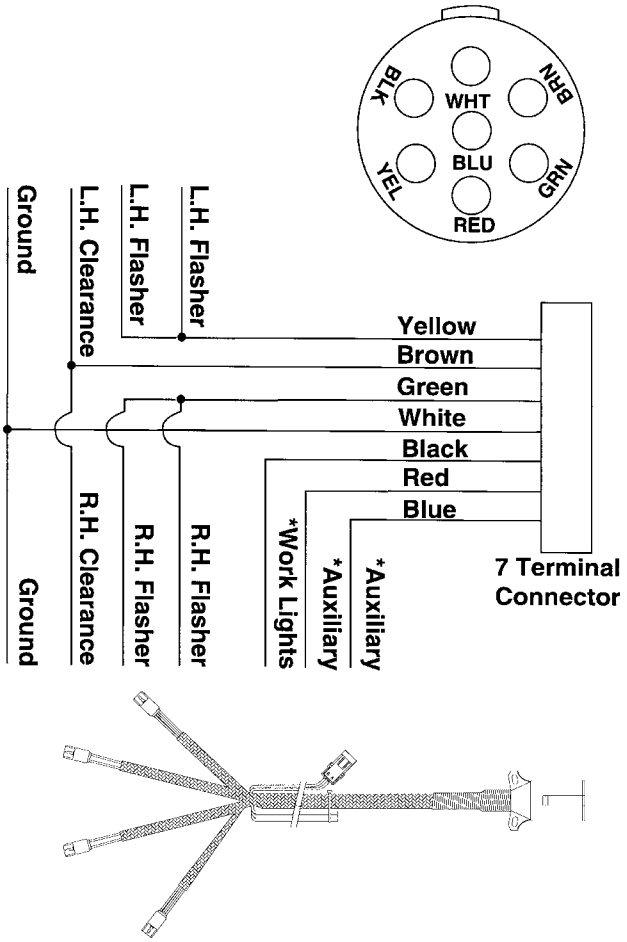

*** Optional customer-supplied auxiliary lights and wires may be wired into existing plug terminals.**

The Light package supplied on the Model 3600V Twin-Line® Planter meets ASAE Standards. For the correct wiring harness to be wired into the lights on your tractor, check with the tractor manufacturer.

69922-35

ELECTRICAL CONTROL CONSOLE SCHEMATIC

IMPORTANT: Before doing any electrical work, disconnect the control console from the tractor battery. Keep wiring harnesses away from high temperature areas or sharp edges. DO NOT route the wiring harnesses along battery cables. Use tie straps to keep wire harness away from moving parts on tractor and planter. Be sure ground connections to the tractor frame are clean to provide good electrical contact.

(PLTR82a)

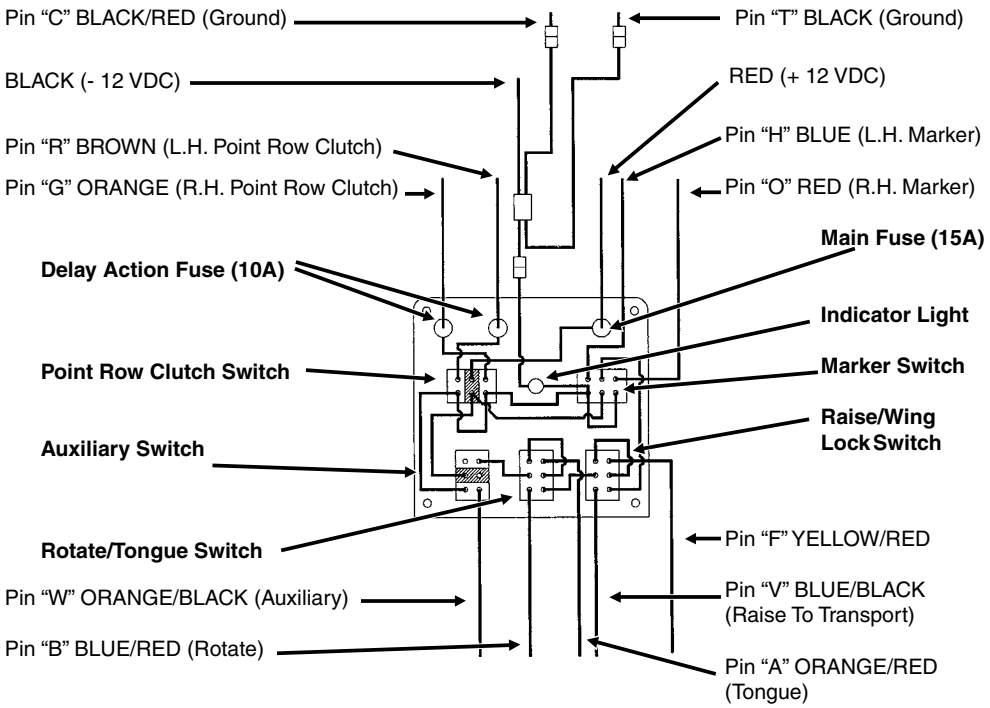

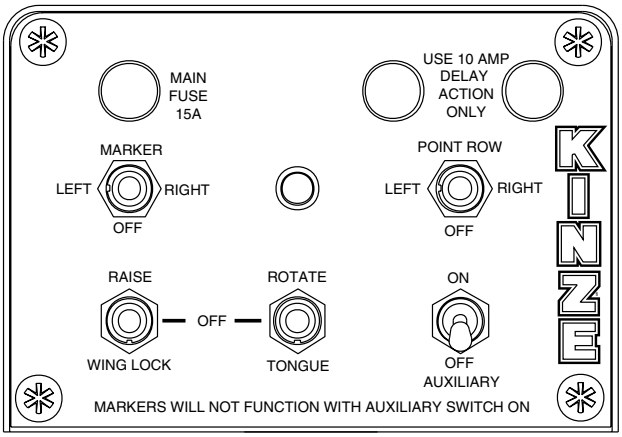

NOTE:

1. Operating marker in either direction lights panel light.
2. Power to the marker switch is fed through the auxiliary switch and the two transport function switches. Operating any of the switches in the lower row disables the marker function and turns off the panel light. (If the point row clutch switch is in the “off” position.)

ELECTRICAL WIRING HARNESS SCHEMATIC (On Tractor)

(ELC10c/ELC13)

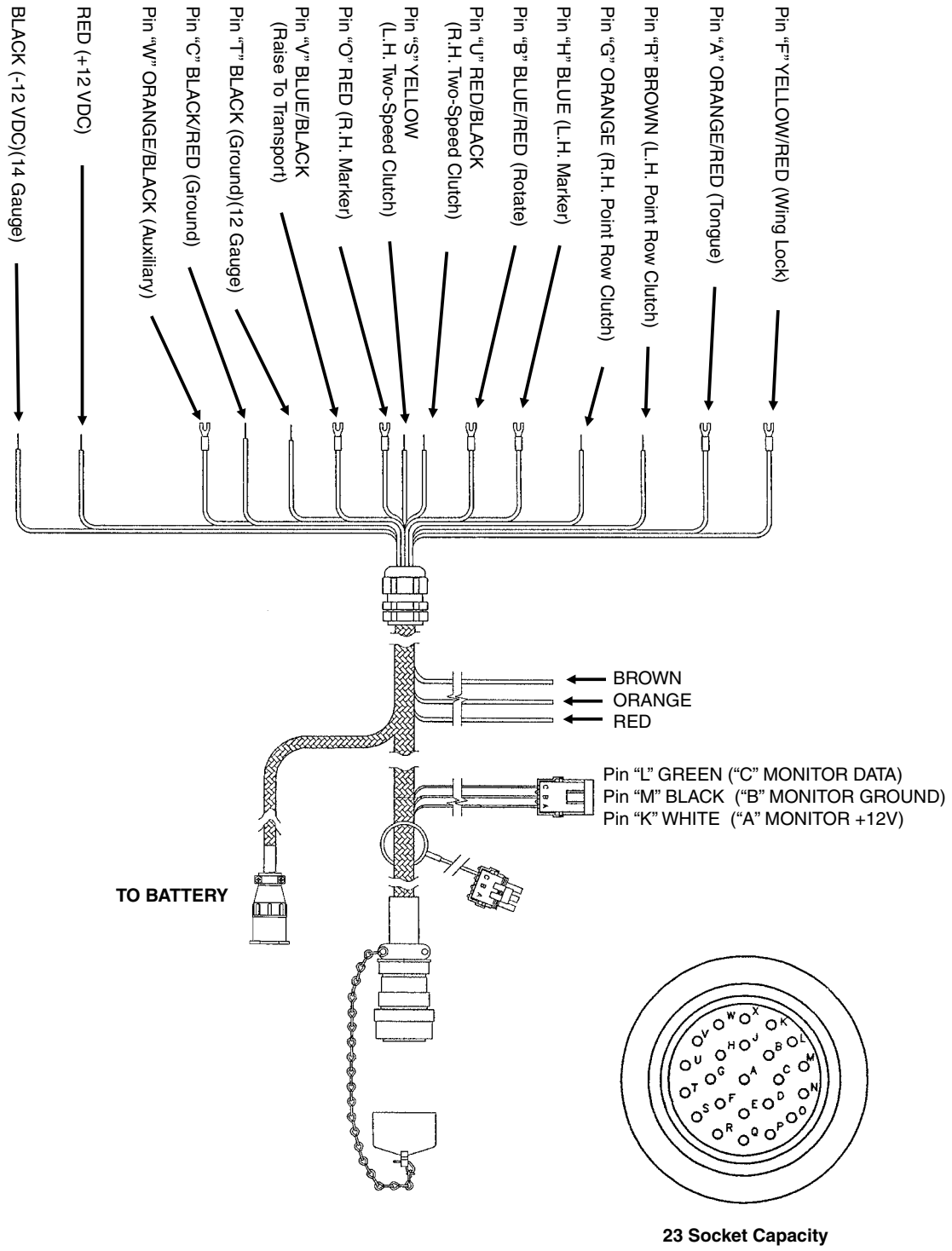

ELECTRICAL WIRING HARNESS SCHEMATIC (On Planter)

(ELC13/ELC12b/TWL71d)

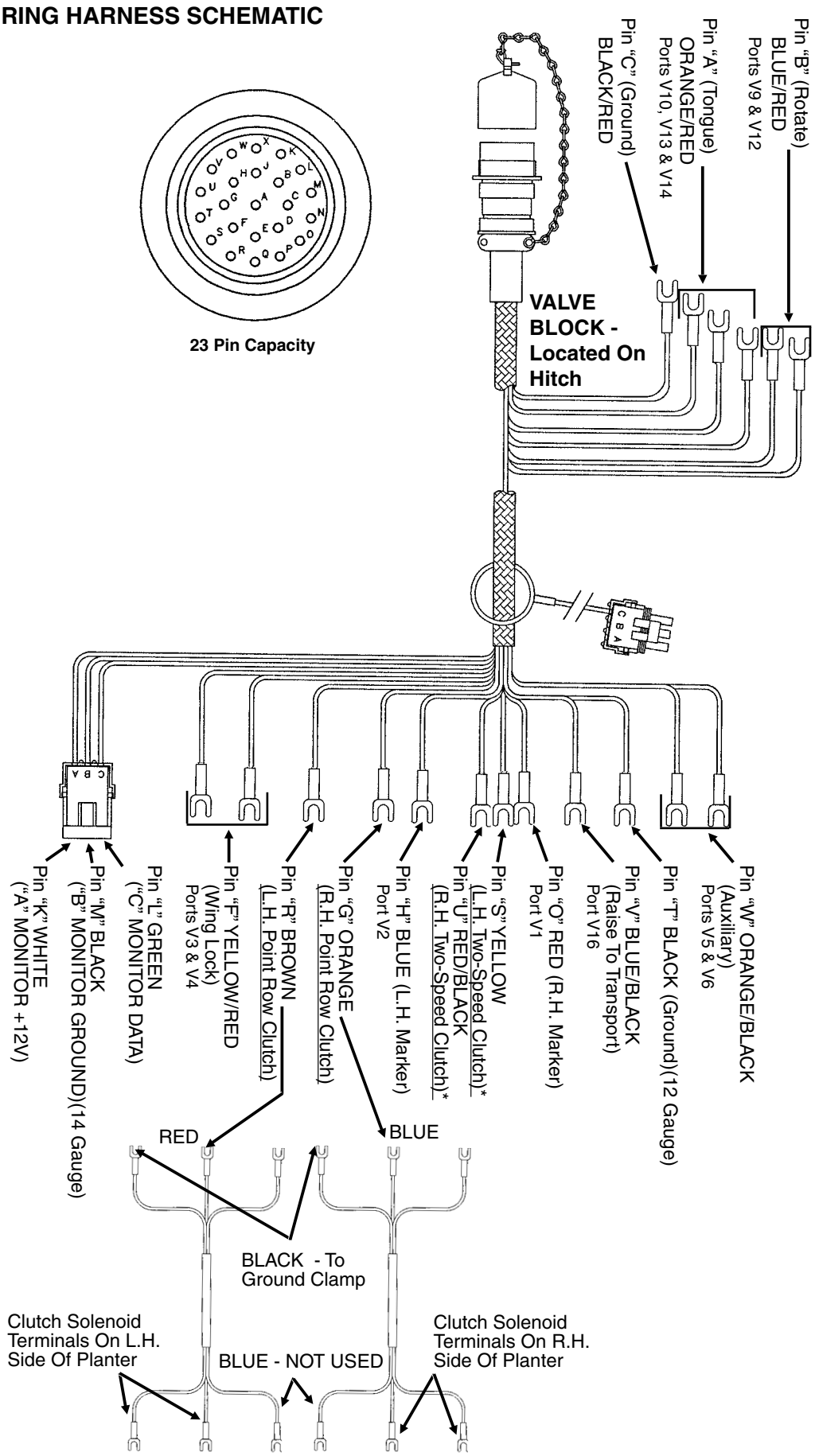

(A7012a)

VALVE BLOCK - Located On Hitch

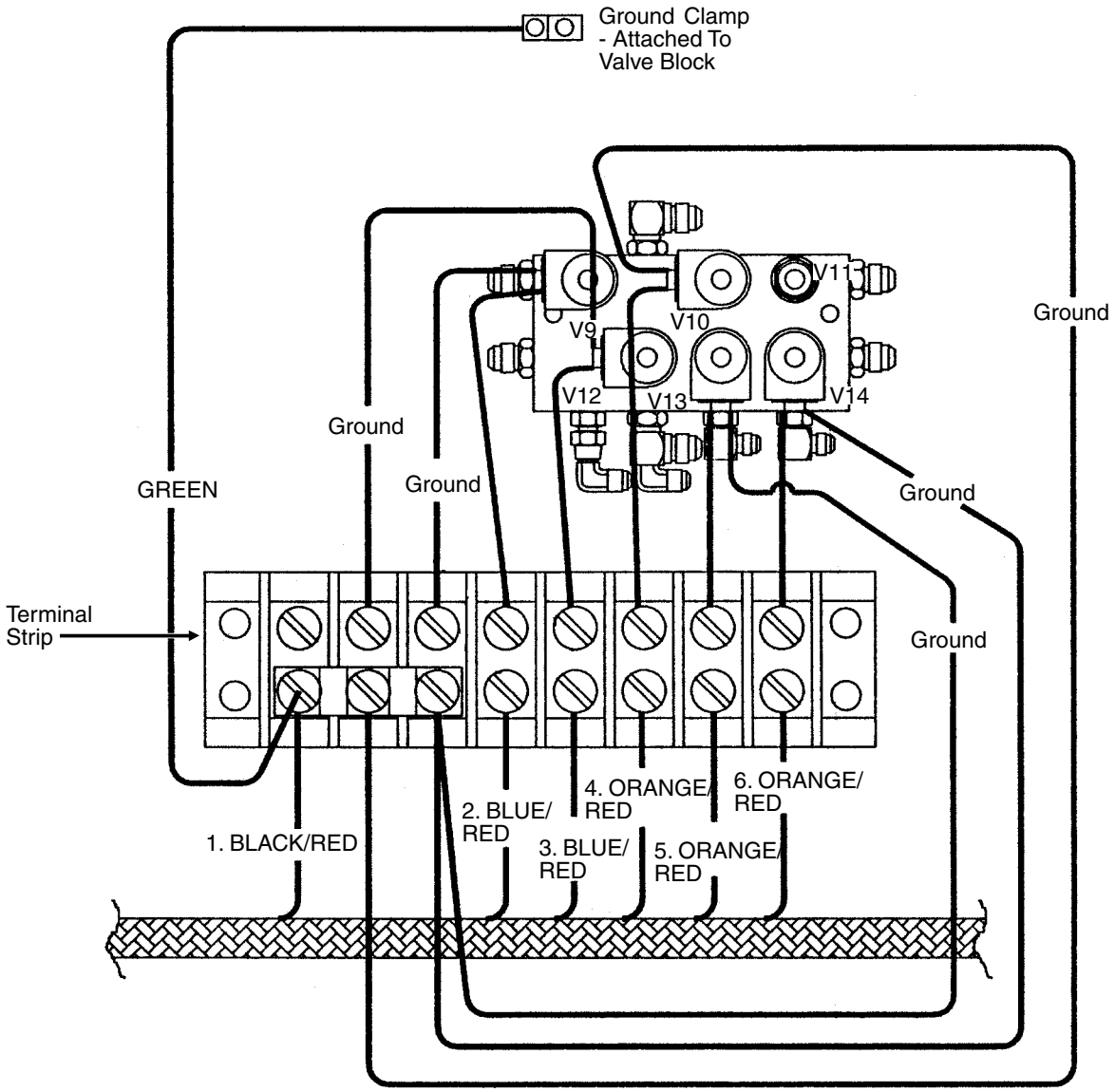

1. BLACK/RED - Pin “C” (Ground)
2. BLUE/RED - Pin “B” (Rotate) - Port V9
3. BLUE/RED - Pin “B” (Rotate) - Port V12
4. ORANGE/RED - Pin “A” (Tongue) - Port V10
5. ORANGE/RED - Pin “A” (Tongue) - Port V13
6. ORANGE/RED - Pin “A” (Tongue) - Port V14

(A7102a)

VALVE BLOCK - Located On R.H. Rear Center Frame

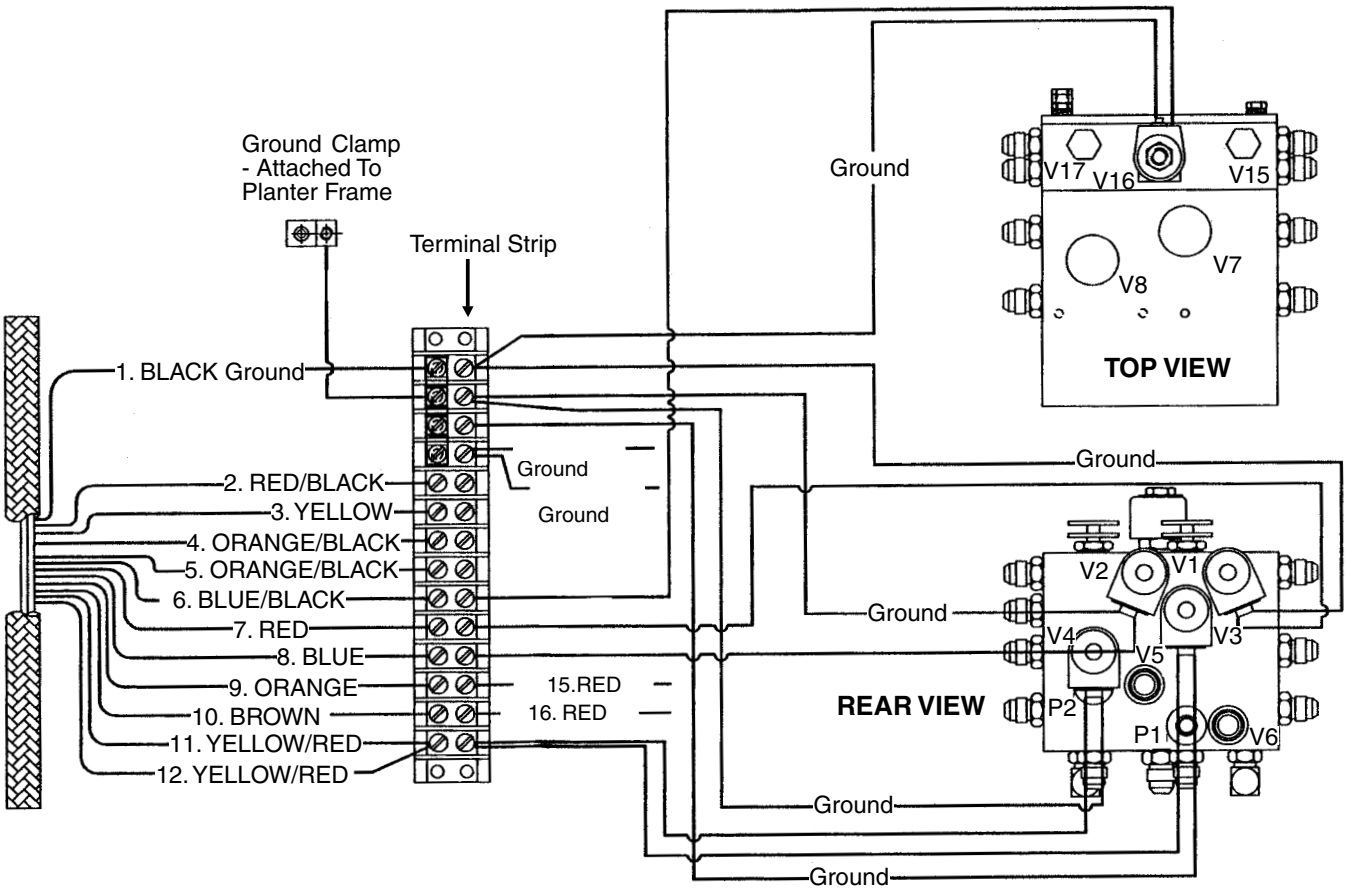

1. BLACK - Pin “T” (Ground)
2. RED/BLACK - Pin “U” (R.H. Two-Speed Clutch)*
3. YELLOW - Pin “S” (L.H. Two-Speed Clutch)*
4. ORANGE/BLACK - Pin “W” (Auxiliary) - Ports V5 & V6
5. ORANGE/BLACK - Pin “W” (Auxiliary) - Ports V5 & V6
6. BLUE/BLACK - Pin “V” (Raise To Transport) - Port V16
7. RED - Pin “O” (R.H. Marker) - Port V1
8. BLUE - Pin “H” (L.H Marker) - Port V2
9. ORANGE - Pin “G” (Right Point Row Clutch)
10. BROWN - Pin “R” (Left Point Row Clutch)
11. YELLOW/RED - Pin “F” (Wing Lock) - Ports V3 & V4
12. YELLOW/RED - Pin “F” (Wing Lock) - Ports V3 & V4
13. BLACK - (R.H. Point Row Ground)
14. BLACK - (L.H. Point Row Ground)
15. RED - (R.H. Point Row)
16. RED - (L.H. Point Row)

HYDRAULIC SYSTEM SCHEMATIC

(TWL143/TWL325/TWL111)

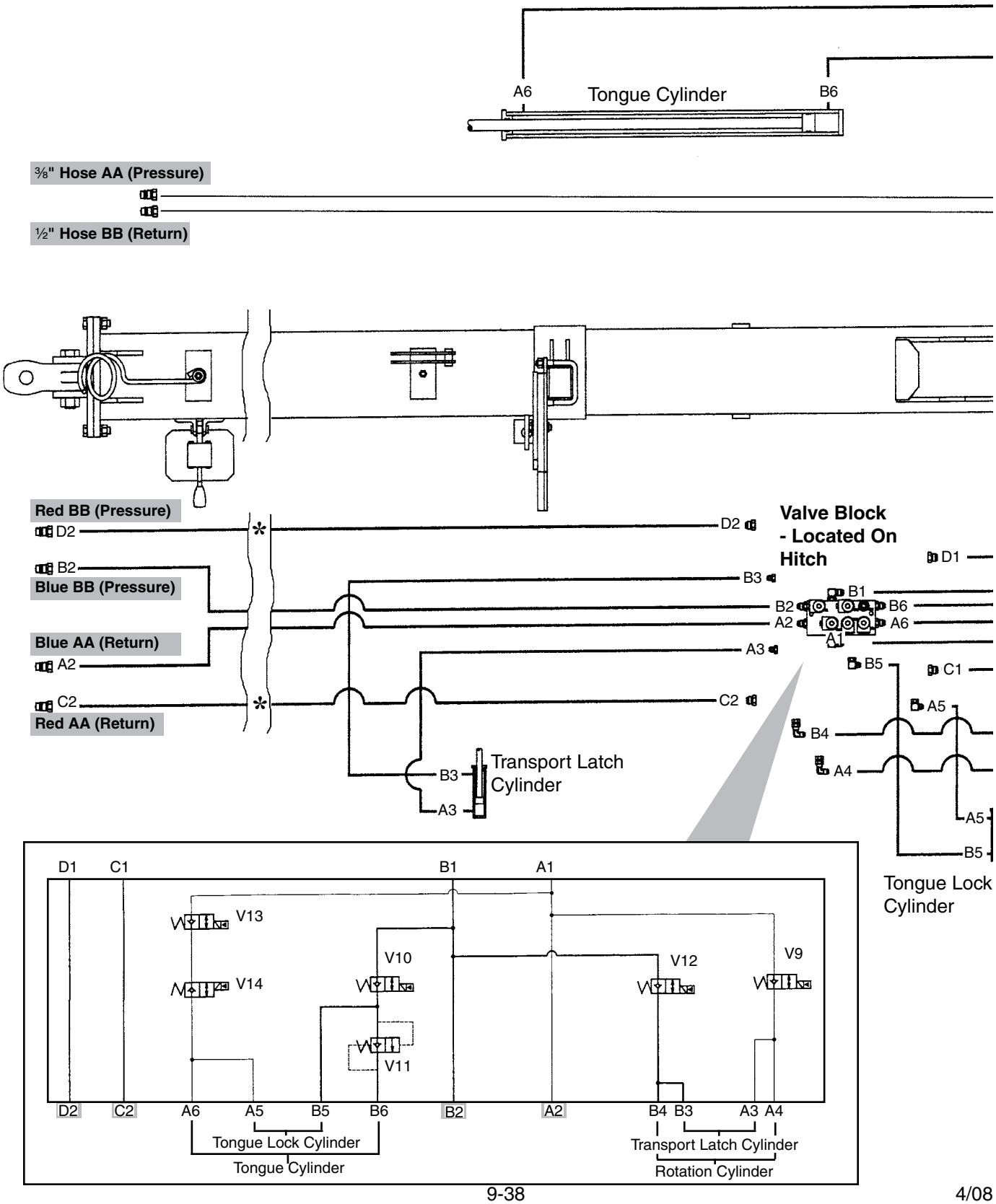

(TWL108/TWL115)

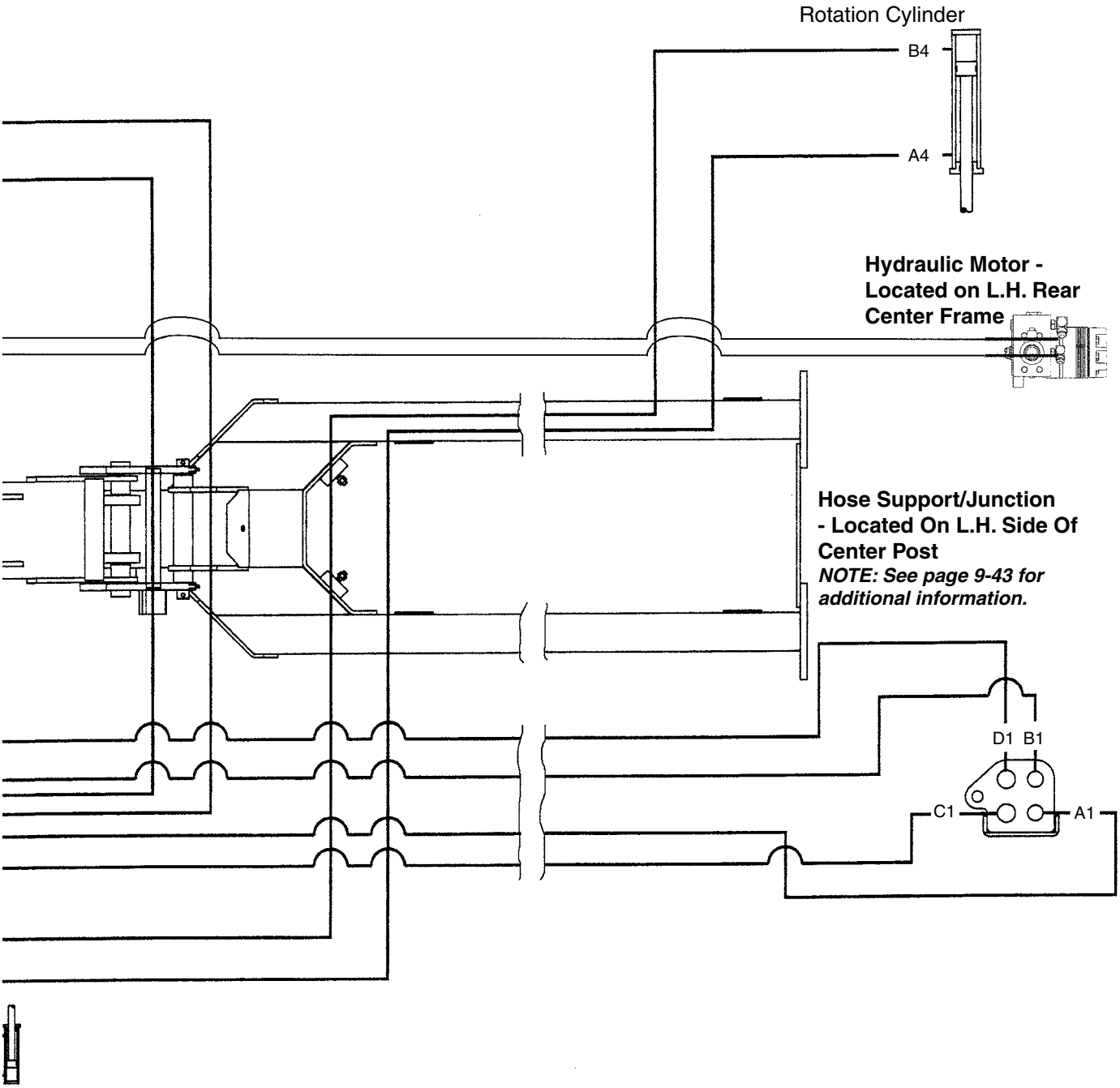

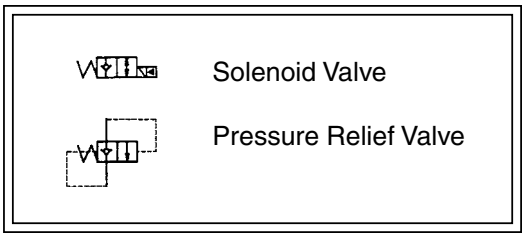

HYDRAULIC SYSTEM SCHEMATIC (Continued)

(TWL105c/TWL113/TWL114)

16 Row Shown (Two Wing Lift Cylinders Per Wing)
12 Row (One Wing Lift Cylinder Per Wing)

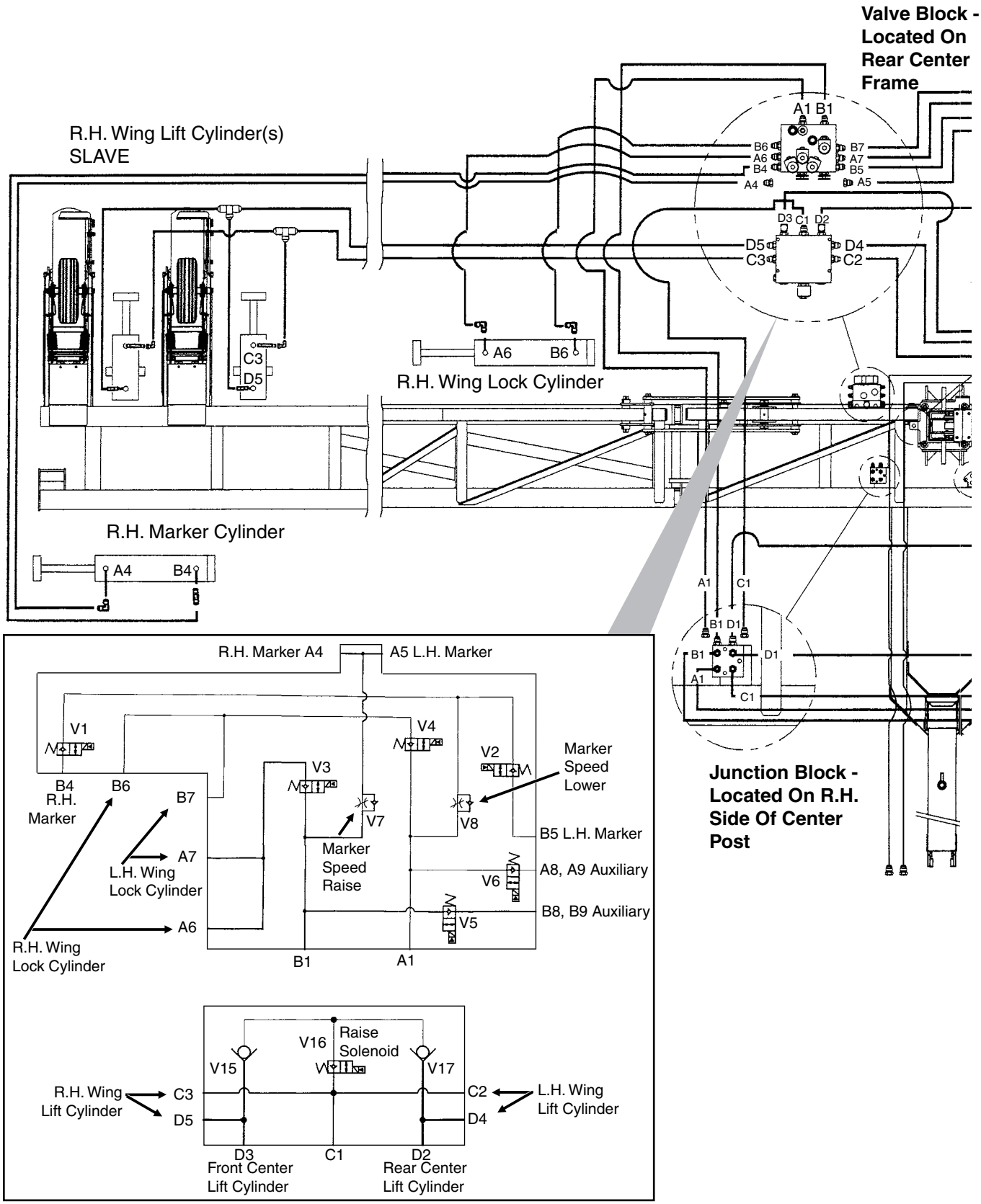

(TWL106/TWL114)

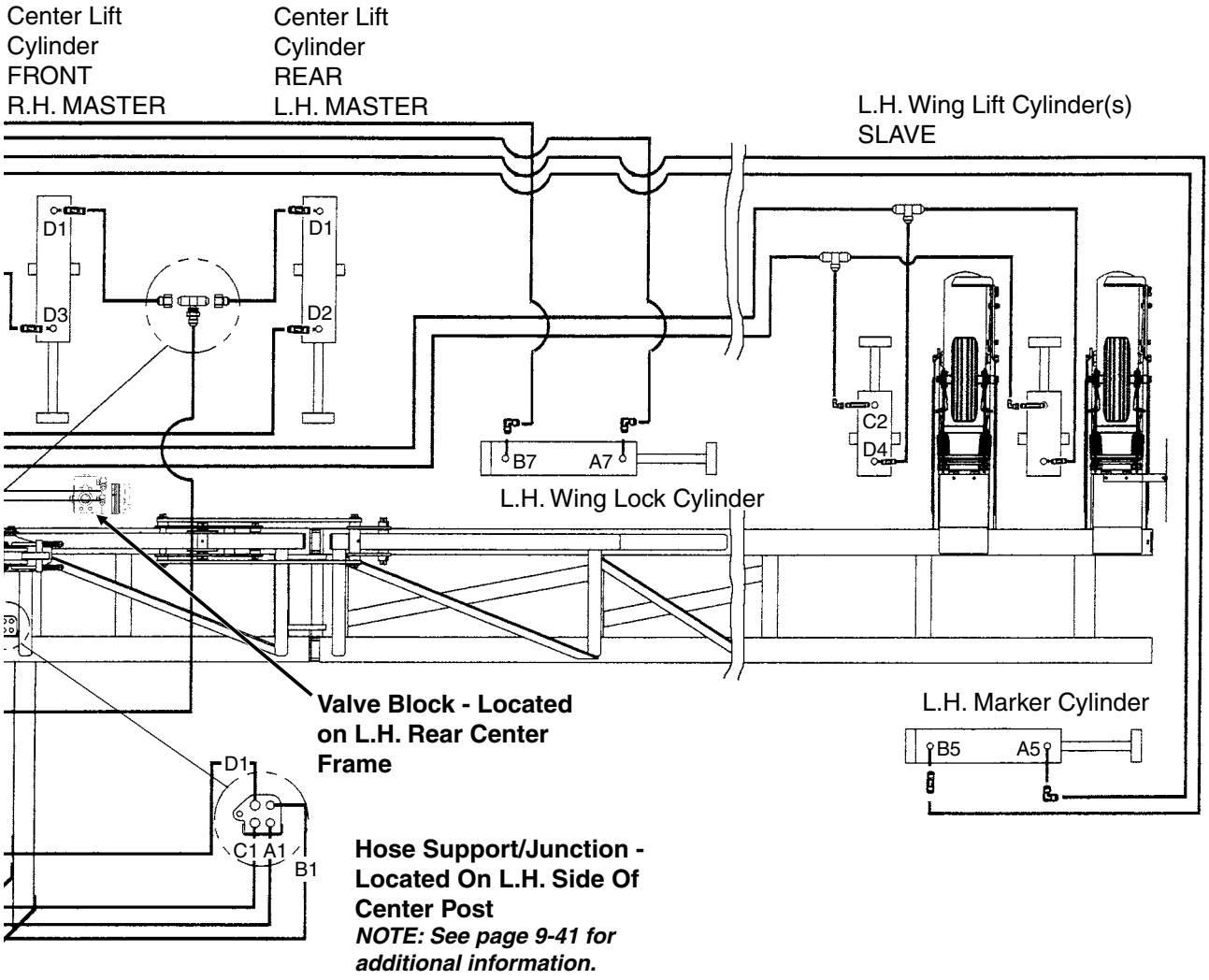

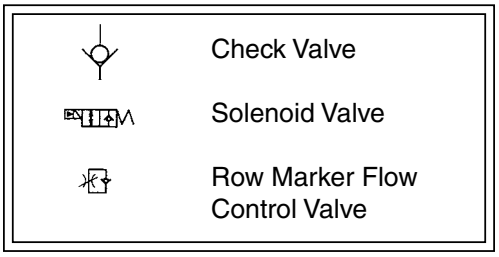

Airline Schematic
(PNE40)

16 Row Shown

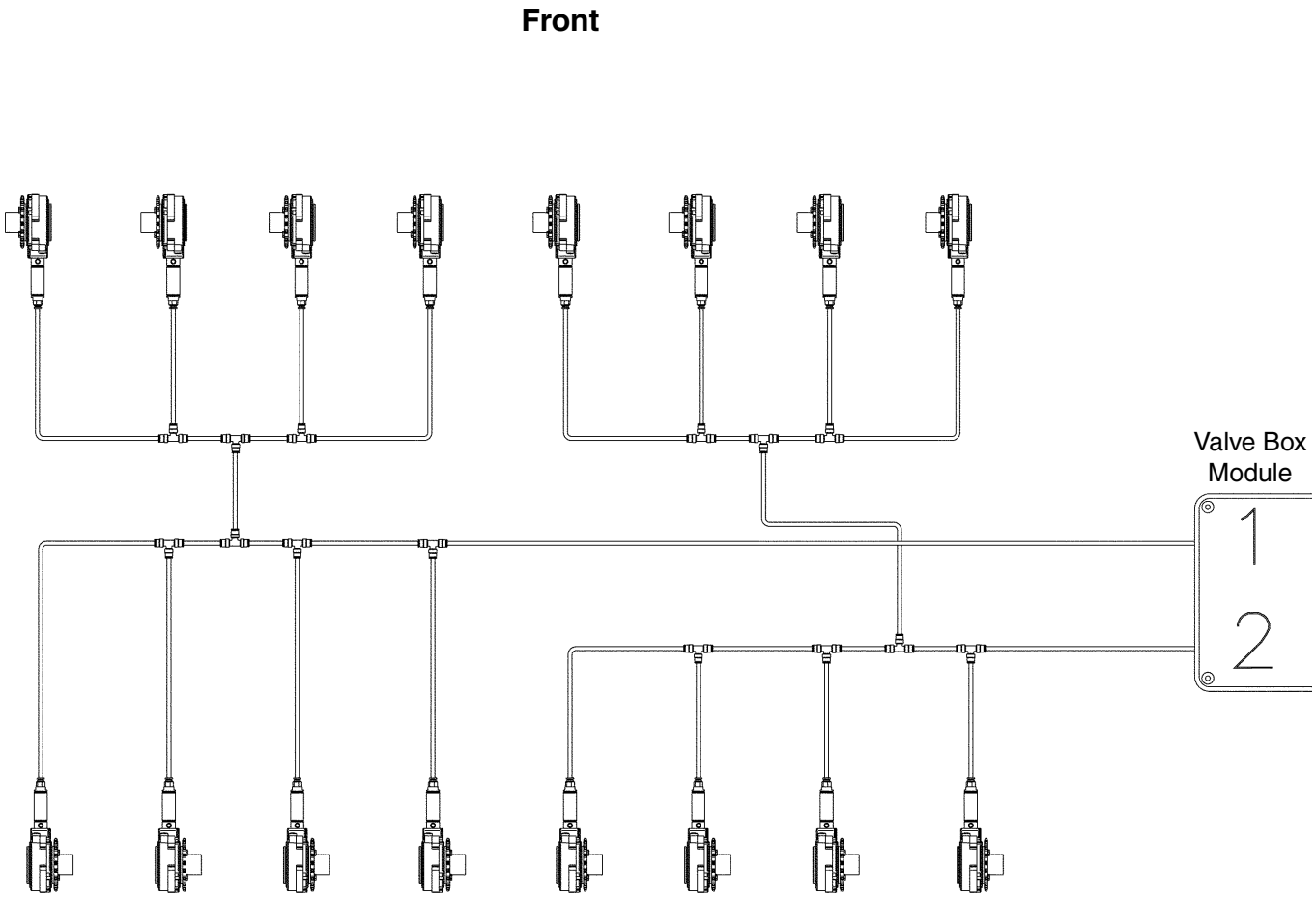

Front

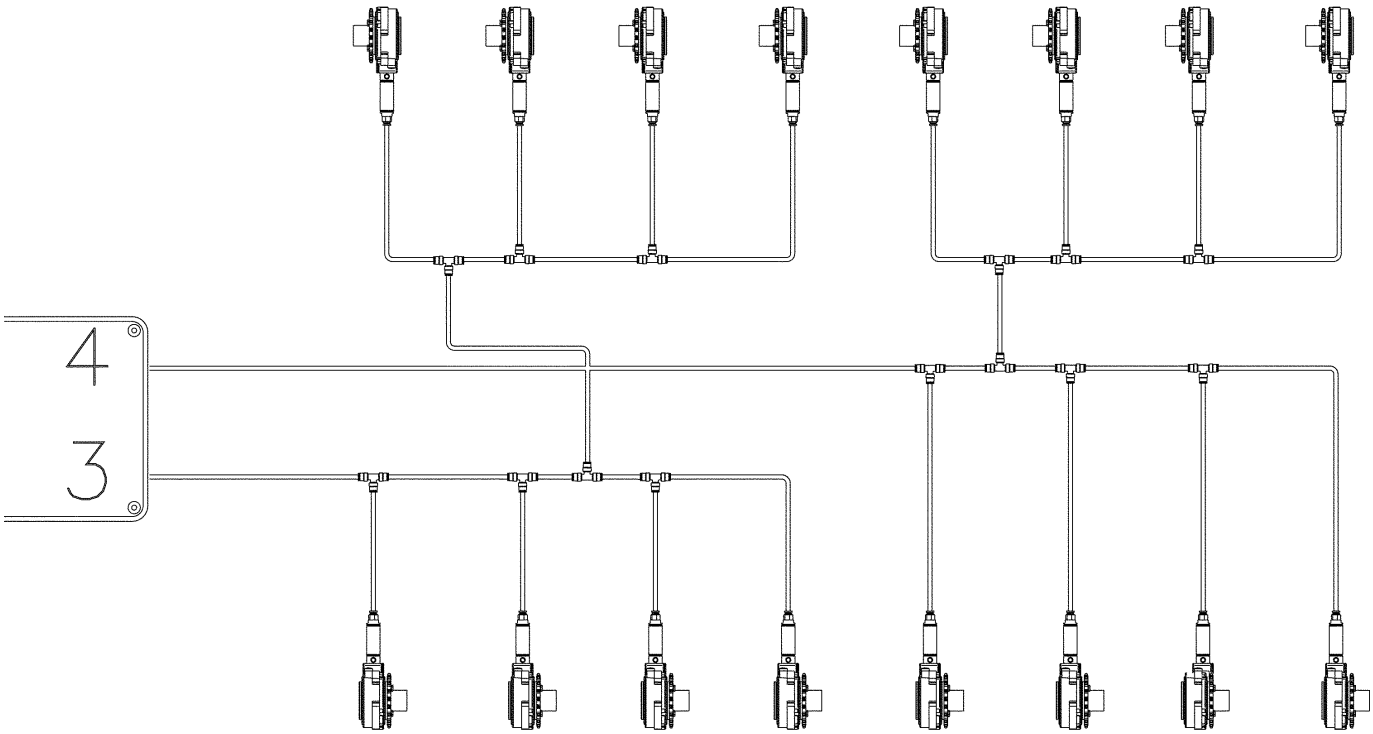

PARTS LIST INDEX

ROW UNIT
15" Seed Opener Disc Blade/Bearing Assembly And Scrapers P11
Brush-Type Seed Meter P23
Coulter Mounted Residue Wheels P30
Covering Discs/Single Press Wheel P14
Drag Closing Attachment P18
Finger Pickup Seed Meter P22
Frame Mounted Coulter W/Residue Wheels P32
Gauge Wheels P12
Hopper Support And Meter Drive P20
Parallel Arms, Mounting Support Plate And Pneumatic Down Pressure Package P4
Parallel Arms, Mounting Support Plate And Quick Adjustable Down Force Springs Option P10
Pneumatic Down Pressure Control Box, Sending Unit And Harnesses P6
Pneumatic Down Pressure Air Compressor, Dual Solenoid Assembly, Tubing And Fittings P8
Row Unit Mounted Disc Furrower P26
Row Unit Mounted No Till Coulter P25
Row Unit Mounted Residue Wheel P28
Seed Hopper And Lid P21
Shank Assembly, Seed Tube And Depth Adjustment P2
Spring Tooth Incorporator P24
“V” Closing Wheels P16

BASE MACHINE
2-Point Hitch Option P38
Axle Assembly P52
Center Frame P44
Center Pivot P50
Cylinders P64
Electrical Components P84
Ground Drive Wheel P57
Hose Take-Up P42
Hydraulic Drive P46
Hydraulic Hoses And Fittings P78
Inner Hitch P40
Outer Hitch P36
Row Marker Assemblies P60
Row Marker Spindle/Hub/Blade P58
Safety Chain P36
Transport Wheels/Rock Guards P54
Valve And Junction Blocks P70
Valve Box Module P82
Valves (Solenoid, Flow Control, Pressure Relief, Check, Proportional) P76
Wing Frame P48
Wing Wheel Module P56

ELECTRONIC SEED MONITOR
Planter Monitor Module (PMM) P88
KINZE Vision® Display P86

INTERPLANT® SYSTEM
Interplant® Push Row Unit P34
Interplant® Push Row Unit Drive P86

FERTILIZER
Fertilizer Openers, Mounts And Attachments P92
Liquid Fertilizer P104
Rear Trailer Hitch P114

Decals, Paint And Miscellaneous P116

Numerical Index P119

SHANK ASSEMBLY, SEED TUBE AND DEPTH ADJUSTMENT

(RU166/D16245)

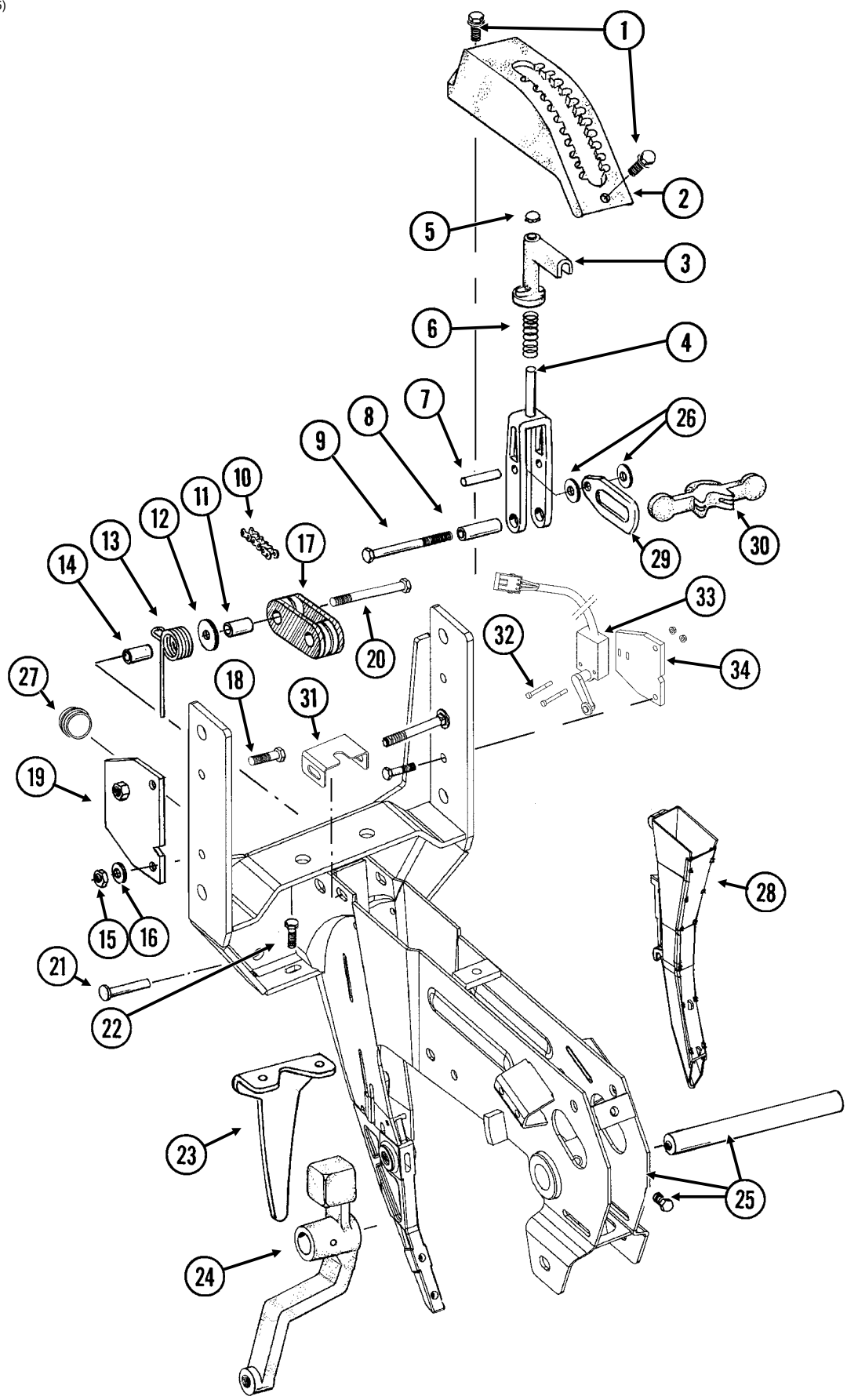

SHANK ASSEMBLY, SEED TUBE AND DEPTH ADJUSTMENT

ITEM	PART NO.	QTY. (Per Row)	DESCRIPTION
1.	G11015	2	Hex Washer Head Cap Screw, 3/8"-16 x 1 1/4"
2.	GB0274	1	Cover, Depth Adjustment
3.	GB0266	1	Handle, Depth Adjustment
4.	GB0267	1	Lever, Depth Adjustment
5.	GD3612	1	Cap Plug
6.	GD10993	1	Spring
7.	GD13361	1	Pin, 3/8" x 1 2/3"
8.	GD11259	1	Sleeve, 3/8" I.D. x 5/8" O.D. x 1 25/32" Long
9.	G11008	1	Hex Head Cap Screw, 3/8"-24 x 2 1/2", Grade 8
	G11007	1	Lock Nut, 3/8"-24, Grade C
10.	G3303-98	1	Chain, No. 41, 98 Pitch Including Connector Link
	G3303-16	1	Chain, No. 41, 16 Pitch Including Connector Link (Used W/Row Unit Extension Brackets)
	GR0196	1	Connector Link, No. 41
11.	GD1026	1	Sleeve, 1 3/16" Long
12.	G10201	1	Special Washer, 3/8" x 1 1/2" O.D.
13.	GD1065	1	Idler Spring
14.	GD7318	1	Sleeve, 1" Long
15.	G10108	1	Lock Nut, 3/8"-16
16.	G10210	1	Washer, 3/8" USS
17.	GD11962	1	Idler
18.	G10003	3	Hex Head Cap Screw, 3/8"-16 x 1 1/2"
	G10108	3	Lock Nut, 3/8"-16
19.	GD10867	2	Stop
20.	G10326	1	Hex Head Cap Screw, 3/8"-16 x 3 3/4"
21.	G10551	1	Clevis Pin, 1/4" x 2 1/2"
	G10669	1	Hair Pin Clip, No. 22
22.	G10312	2	Carriage Bolt, 5/16"-18 x 3/4"
	G10620	2	Serrated Flange Nut, 5/16"-18
23.	GD1033	1	Shield
24.		-	See “Gauge Wheels”, Pages P12 And P13
25.	GA10157	1	Shank W/Gauge Wheel Pivot Spindle And Set Screw
	GD11001	-	Spindle
	G10438	-	Hex Head Cap Screw, 1/2"-13 x 3/4"
26.	G10207	2	Washer, 7/8" O.D. x 13/32" I.D. x .134" (If Applicable)
27.	GD11845	1	Dust Cap
28.			See “KINZE Vision® Display, Pages P86-P87
29.	GB0285	1	Collar, Depth Adjustment
30.	GB0265	1	Pivot Link, Depth Adjustment
31.	GD16245	-	Sun Shade (Rubber)
32.	G11298	2	Hex Slotted Head Cap Screw, #10-32 x 1"
	G11284	2	Serrated Flange Nut, #10-32
33.	GA13580	1	Limit Switch W/Cable
34.	GD19317	1	Implement Switch Bracket
A.	GA13593	-	Implement Switch Assembly, (Items 32-34)

PARALLEL ARMS, MOUNTING SUPPORT PLATE AND PNEUMATIC DOWN PRESSURE PACKAGE

(RU157b/RU159/RU157aa/A12405)

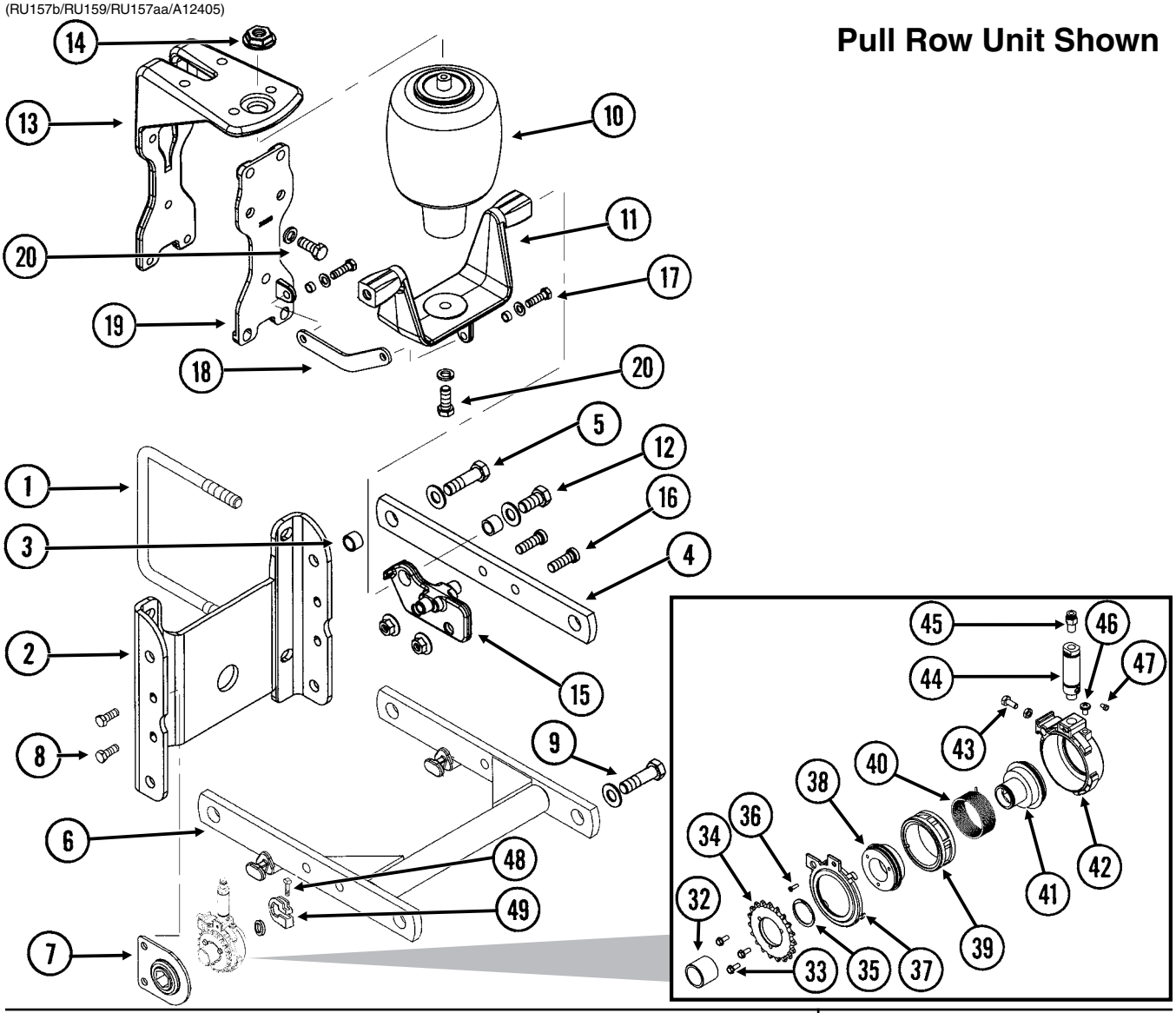

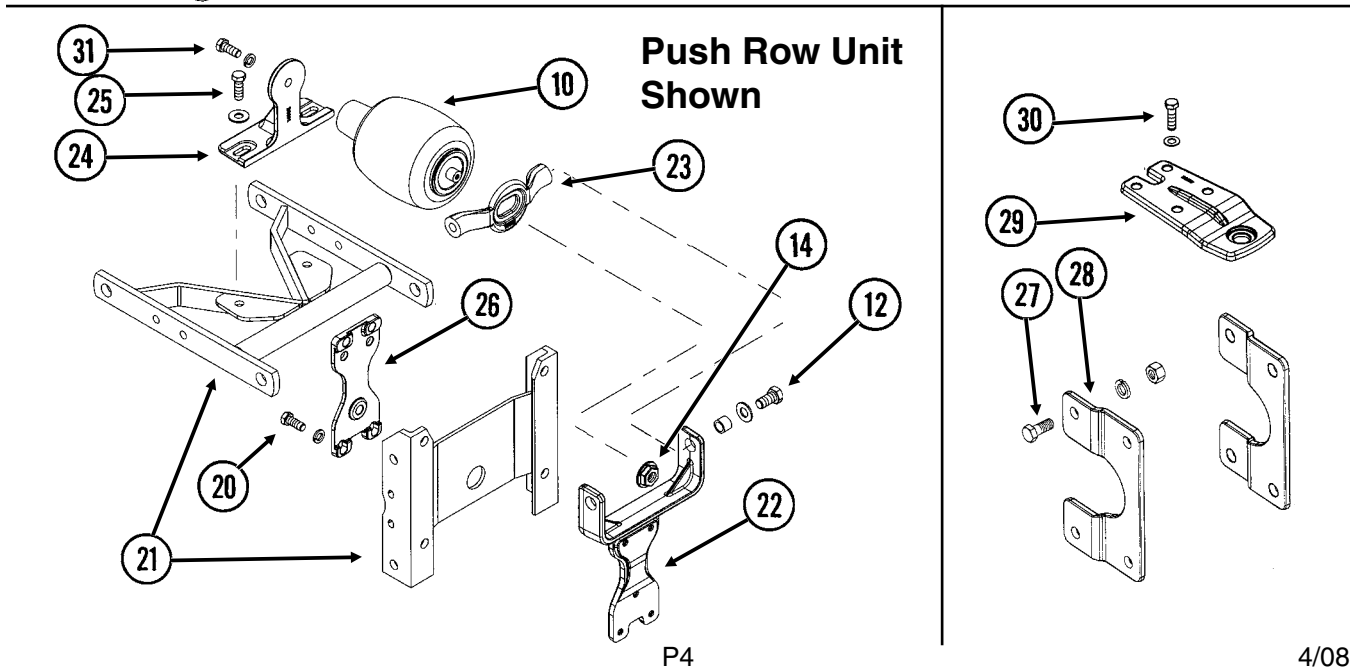

PARALLEL ARMS, MOUNTING SUPPORT PLATE AND PNEUMATIC DOWN PRESSURE PACKAGE

ITEM	PART NO.	QTY. (Per Row)	DESCRIPTION
1.	GD1113	2	U-Bolt, 5" x 7" x ⅝"-11
	G10230	4	Lock Washer, ⅝"
	G10104	4	Hex Nut, ⅝"-11
2.	GD10036	1	Mounting Support Plate
3.	GB0218	4	Bushing, 21⁄32" I.D. x ⅞" O.D. x 19⁄32" Long
4.	GD11422	2	Upper Parallel Arm
5.	G10732	4	Hex Head Cap Screw, ⅝"-18 x 2"
	GD7805	4	Special Washer, ⅝", Hardened
	G10412	4	Lock Nut, ⅝"-18
6.	GA5651	1	Lower Parallel Arm
7.	GA1720	1	Bearing/Sprocket, ⅞" Hex Bore
8.	G10001	2	Hex Head Cap Screw, ⅜"-16 x 1"
	G10229	2	Lock Washer, ⅜"
	G10101	2	Hex Nut, ⅜"-16
9.		-	See “Hopper Support And Meter Drive”, Page P20
10.	GA11982	1	Air Spring Assembly
11.	GB0394	1	Saddle
12.	G11018	2	Hex Head Cap Screw, ⅝"-18 x 1 ¼"
	GD7805	2	Special Washer, ⅝", Hardened
	GD3180-30	2	Sleeve, ⅞" O.D. x ⅝" I.D. x 21⁄32"
13.	GB0396	1	Head Mount
14.	GB0397	1	Shoulder Nut, ¾"-16
15.	GB0395	2	Bracket
16.	G11220	4	Hex Socket Cap Screw, ½"-13 x 1 ½"
	G10071	4	Serrated Flange Nut, ½"-13
17.	G10004	2	Hex Head Cap Screw, ⅜"-16 x 1 ¼"
	G10203	2	Washer, ⅜" SAE
	GD11963-04	2	Spacer, ¼"
	G10108	2	Lock Nut, ⅜"-16
18.	GD17794	1	Link
19.	GB0393	1	Plate
20.	G10037	7	Hex Head Cap Screw, ½"-13 x 1 ¼"
	G10206	2	Washer, ½" SAE (Lower Two Holes Only)
	G10228	7	Lock Washer, ½"
21.		-	See “Interplant Push Row Unit”, Pages P34 And P35
22.	GB0390	1	Yoke Mount
23.	GB0392	1	Yoke
24.	GB0391	1	Mount
25.	G10017	2	Hex Head Cap Screw, ½"-13 x 1 ½"
	G10216	2	Washer, ½" USS
	G10228	2	Lock Washer, ½"
	G10102	2	Hex Nut, ½"-11
26.	GB0389	1	Plate
27.	G10007	4	Hex Head Cap Screw, ⅝"-11 x 1 ½"
	G10230	4	Lock Washer, ⅝"
	G10104	4	Hex Nut, ⅝"-11
28.	GB0366	2	Extension Bracket
29.	GB0398	1	Extension
30.	G10039	4	Hex Head Cap Screw, ½"-13 x 1 ¾"
	G10206	4	Washer, ½" SAE
	G10111	4	Lock Nut, ½"-13
31.	G10037	1	Hex Head Cap Screw, ½"-13 x 1 ¼"
	G10228	1	Lock Washer, ½"
32.	GD18891	1	Spacer, 1 ¼" O.D. x 1"
33.	G10020	1	Hex Head Cap Screw, ¼"-20 x ⅝"
34.	GR1812	1	Sprocket, 19 Tooth
35.	G11295	1	Retaining Ring
36.	G11243	1	Slotted Flat Head Machine Screw, No. 8-32 x ½", Stainless Steel
37.	GR1894	1	Air Housing Cover
38.	GR1815	1	Sprocket Hub
39.	GR1818	1	Ratchet Gear
40.	GR1813	1	Clutch Spring
41.	GR1830	1	Hex Bushing
42.	GR1895	1	Air Clutch Housing
43.	G10023	3	Hex Head Cap Screw, ¼"-20 x ¾"
	G10103	3	Hex Nut, ¼"-20
44.	GR1896	1	Air Cylinder
45.	GR1819	1	Push Connect, ⅛" NPT Male x ¼"
46.	G11296	1	Pan Head Machine Screw, ¼"-20 x ¾" x ¾"
47.	GR1898	1	Filter
48.	G10130	-	Square Head Machine Bolt, 5⁄16"-18 x 1 ¾"
	G10923	-	Flange Nut, 5⁄16"-18, No Serration
49.	GD11045	-	Lock Clamp
A.	G6325X	-	U-Bolt Package For 5" x 7" Toolbar, Includes: (2) GD1113, (4) G10230, (4) G10104
B.	GA12405	-	Air Clutch Assembly, (Items 32-48)

PNEUMATIC DOWN PRESSURE CONTROL BOX, SENDING UNIT AND HARNESSES

(PNE30b/MTR27a/ELC27b/MTR45/MTR27t/PNE30c)

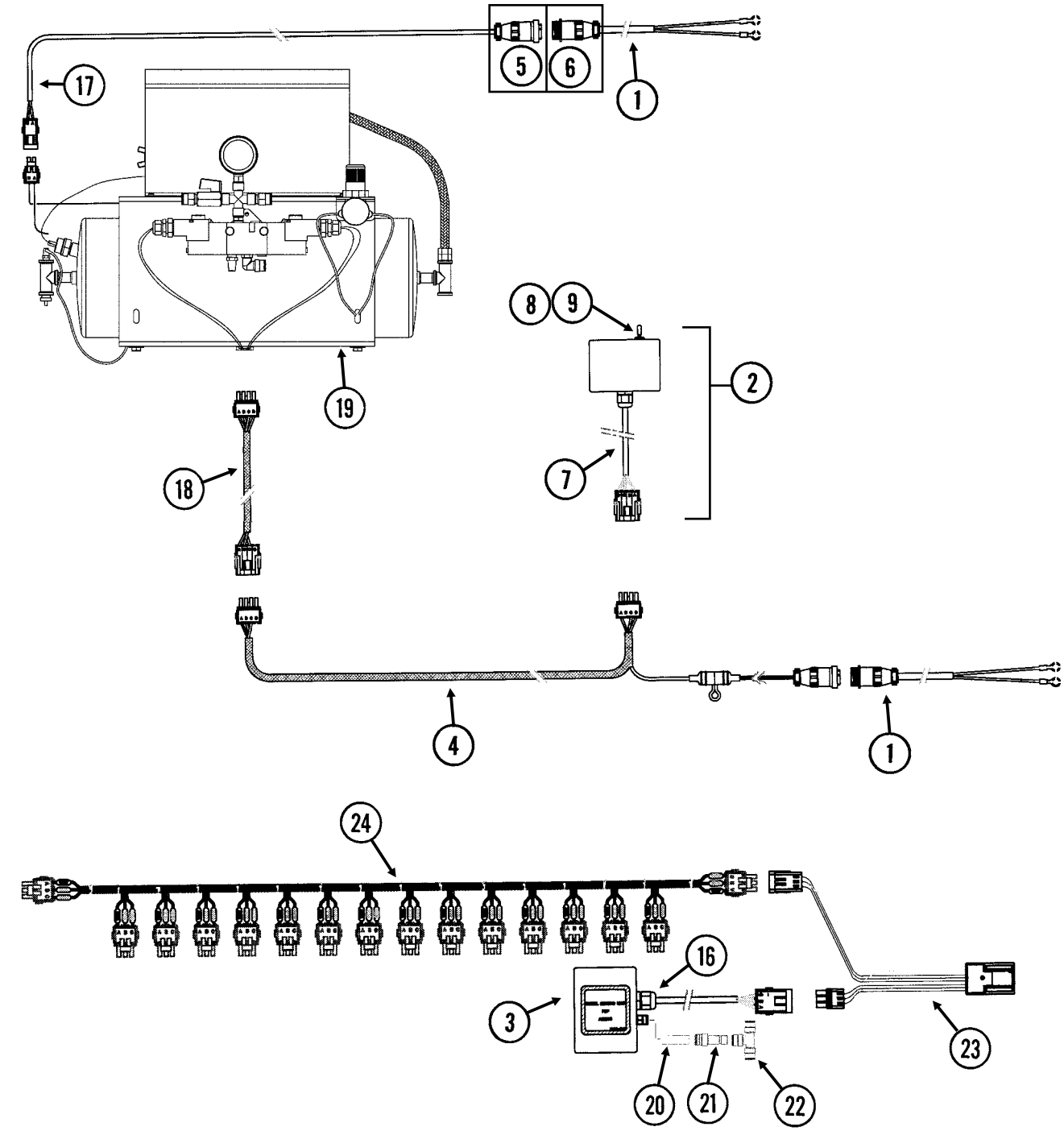

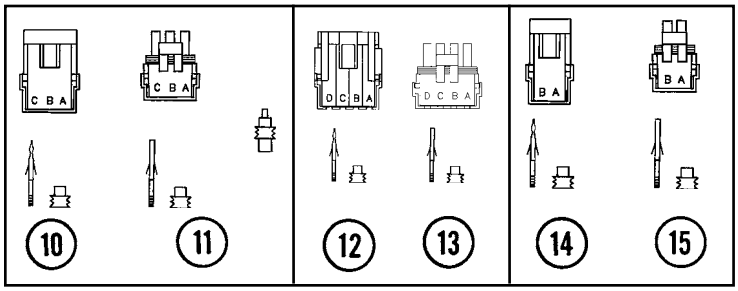

PNEUMATIC DOWN PRESSURE CONTROL BOX, SENDING UNIT AND HARNESSES

ITEM	PART NO.	QTY.	DESCRIPTION
1.	GA7856	2	Power Lead Adapter
2.	GA12813	1	Control Box Assembly
3.	GA12815	1	Sending Unit
4.	GA12814	1	Wiring Harness W/Fuse Holder And Fuse, 206"
	GD14258	-	Fuse Holder
	GD14660	-	Fuse, 2 Amp Delay Action
5.	G1K268	-	Console Cable Connector Kit, Includes: (1) 3-Pin Connector, (1) Cable Clamp, (1) Lock Ring, (3) Female Terminal Pins
6.	G1K267	-	Console Cable Connector Kit, Includes: (1) 3-Pin Connector, (1) Cable Clamp, (3) Male Terminal Pins
7.	GA9964	1	Strain Relief
8.	GR1363	1	Hex Face Nut, 15⁄32"-32
	GR1364	1	Internal Tooth Lock Washer, 15⁄32"
9.	GA6978	1	Switch, 3 Position Toggle, Momentary On-Off-Momentary On
10.	G1K248	-	3-Pin Female Connector Kit (Black), Includes: (3) 3-Pin Female Housings, (9) Pin Contacts, (9) Seals
11.	G1K252	-	3-Pin Male Connector Kit (Black), Includes: (3) 3-Pin Male Housings, (9) Socket Contacts, (9) Seals
12.	GA8328	-	4-Pin Female Connector Kit, Includes: (1) 4-Pin Female Housing, (4) Pin Contacts, (4) Seals
13.	GA8329	-	4-Pin Male Connector Kit, Includes: (1) 4-Pin Male Housing, (4) Socket Contacts, (4) Seals
14.	G1K321	-	2-Pin Female Connector Kit (Black), Includes: (3) 2-Pin Female Housings, (6) Pin Contacts, (6) Seals
15.	G1K320	-	2-Pin Male Connector Kit (Black), Includes: (3) 2-Pin Male Housings, (6) Socket Contacts, (6) Seals
16.	GA9964	2	Strain Relief
17.	GA12684	1	Wiring Harness W/Fuse Holder And Fuse, 60'
	GD14258	-	Fuse Holder
	GD18275	-	Fuse, 20 Amp
18.	GA12858	1	Wiring Harness, 60'
19.			See “Pneumatic Down Pressure Air Compressor, Dual Solenoid Assembly, Tubing And Fittings”, Pages P8 And P9
20.	GD17151-06	1	Nylon Tubing, ¼" O.D. x 1 ½'
21.	GD18796	1	Reducer, ⅜" To ¼"
22.	GD18010	1	Tee, ⅜" Tube Union
23.	GA12812	1	Hall Effect Adapter
24.			See “Planter Monitor Module (PMM)”, Pages P88 And P89

PNEUMATIC DOWN PRESSURE AIR COMPRESSOR, DUAL SOLENOID ASSEMBLY, TUBING AND FITTINGS

(PNE06a/PNE02/PNE05/A13169/PNE09/PNE08)

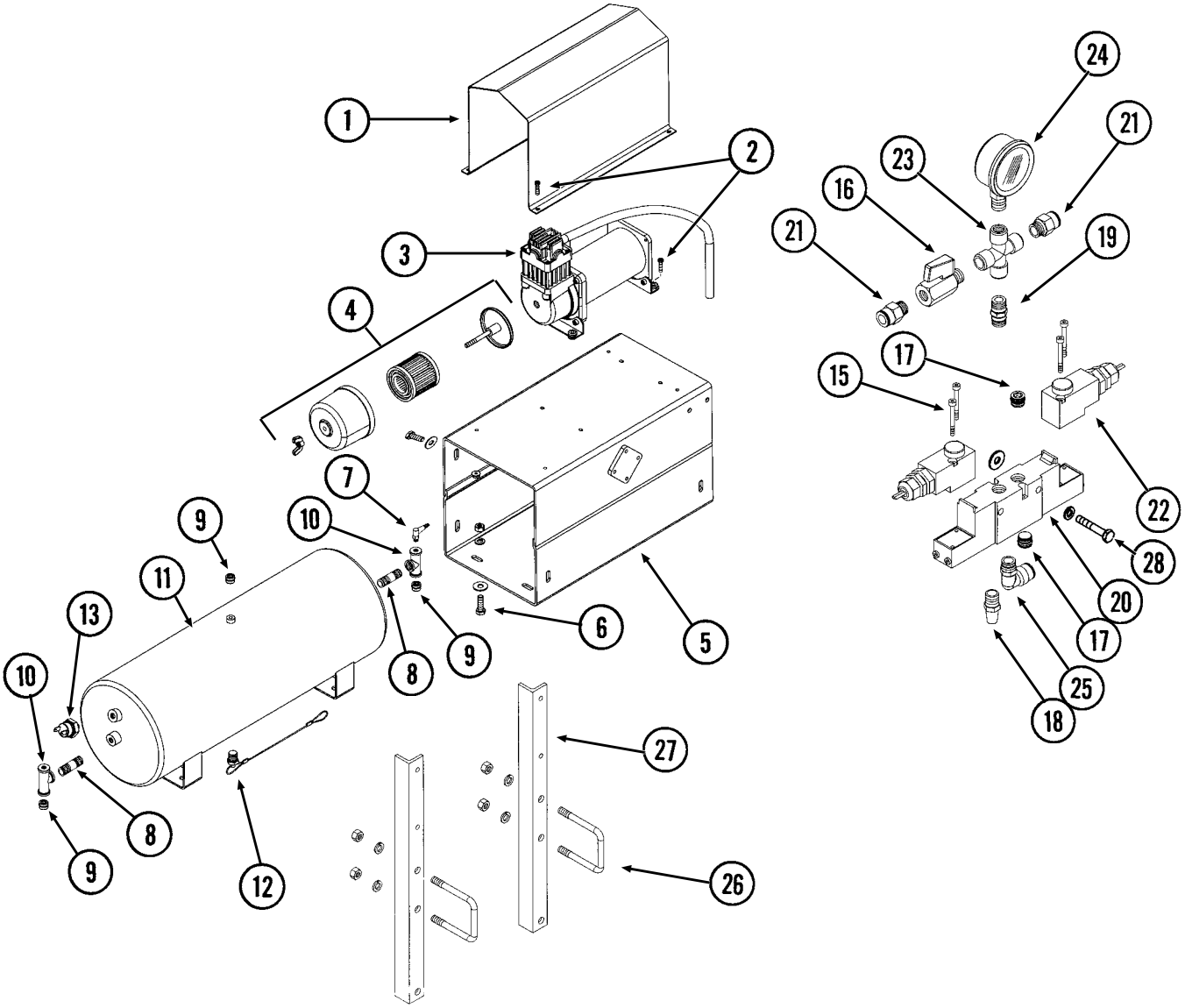

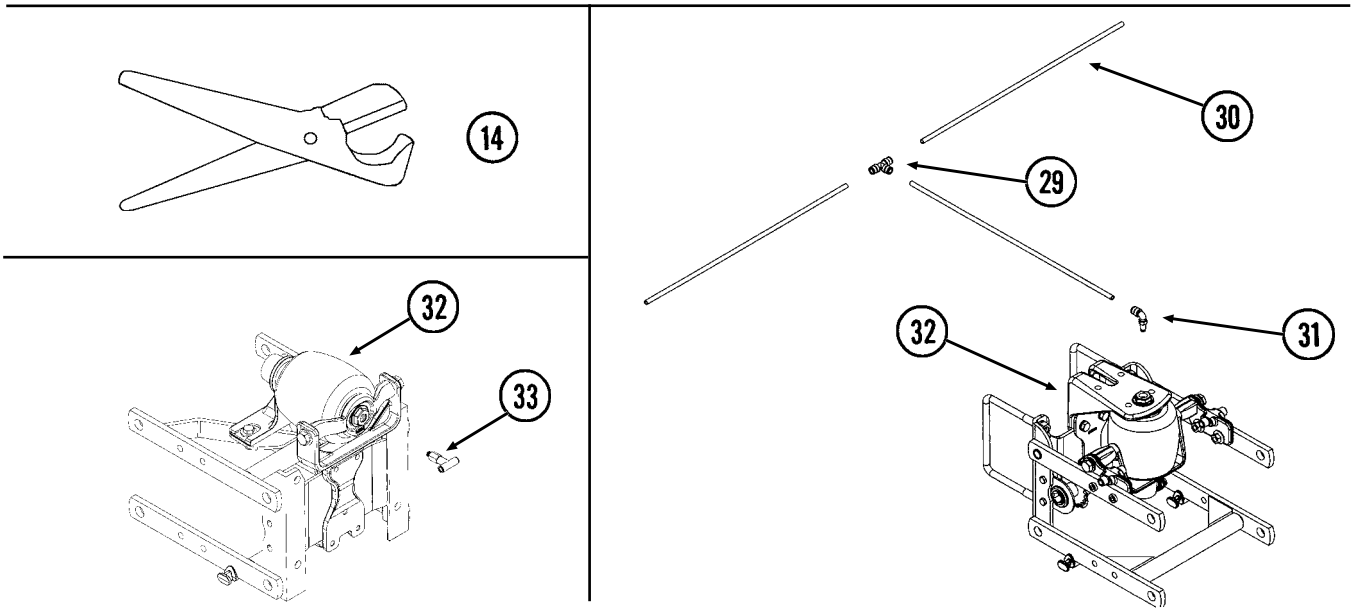

PNEUMATIC DOWN PRESSURE AIR COMPRESSOR, DUAL SOLENOID ASSEMBLY, TUBING AND FITTINGS

ITEM	PART NO.	QTY.	DESCRIPTION
1.	GD18112	1	Cover
2.	G11066	8	Phillips Pan Head Machine Screw, No. 10-24 x ¾", Stainless Steel
	G10992	8	Serrated Flange Nut, No. 10-24
3.	GA12102	1	Air Compressor
4.	GA12404	1	Filter Assembly
	GR1809	-	Filter
5.	GA12358	1	Mount
6.	G10019	8	Hex Head Cap Screw, 5⁄16"-18 x 1"
	G10219	8	Washer, 5⁄16" USS
	G10232	8	Lock Washer, 5⁄16"
	G10106	8	Hex Nut, 5⁄16"-18
7.	GA13512	1	Valve Stem, ¼" NPT
8.	GD19238	2	Nipple, ¼" NPT
9.	GD17156	3	Plug, ¼" NPT
10.	GD19237	2	Tee, ¼" NPT
11.	GA11988	1	Tank, 3 Gallon
12.	GA11991	1	Drain, ¼" NPT
13.	GR1778	1	Pressure Switch
14.	GA13169	1	Tube Cutter W/Blade
	GR1843	-	Blade
15.	G11247	4	Slotted Pan Head Machine Screw, M4-0.7 x 8
16.	GA11992	1	Shutoff Valve, ¼" NPT
17.	GD17156	2	Plug, ¼" NPT
18.	GA11997	1	Breather, ¼" NPT
19.	GD17154	1	Connector, ¼" Male
20.	GA11993	1	Block
21.	GD17141	3	Connector, ¼" Male
22.	GA11994	2	Solenoid
23.	GD18078	1	Female Cross, ¼" NPT
24.	GA12104	1	Pressure Gauge, ¼" NPT
25.	GD17143	1	Swivel Elbow, ¼" NPT x ⅜"
26.	GD4743	2	U-Bolt, 3" x 3" x ½"-13
	G10228	4	Lock Washer, ½"
	G10102	4	Hex Nut, ½"-13
27.	GD18119	2	Bracket
28.	G10040	2	Hex Head Cap Screw, ¼"-20 x 1 ¾"
	G10227	2	Lock Washer, ¼"
	G10209	2	Washer, ¼" USS
29.	GD18010	-	Tee, ⅜" Tube Union
30.	GD17150-03	-	Nylon Tubing, ⅜" O.D. x 64', 12 Row Pull Row Units
	GD17150-04	-	Nylon Tubing, ⅜" O.D. x 86', 16 Row Pull Row Units
	GD17150-08	-	Nylon Tubing, ⅜" O.D. x 60', 11 Row Push Row Units
	GD17150-09	-	Nylon Tubing, ⅜" O.D. x 82', 15 Row Push Row Units
	GD17150-12	-	Nylon Tubing, ⅜" O.D. x 5', Even-Row Push Row Unit
31.	GD18011	-	Elbow, ⅜" x ⅛" NPT Extended
32.		-	See “Parallel Arms, Mounting Support Plate And Pneumatic Down Pressure Package”, Pages P4 And P5
33.	GD18274	-	Tee, ⅜" x ⅛" NPT Extended, Push Row Unit
A.	GA12626	-	Air Compresor Assembly (Items 1-14)
B.	GA11995	-	Dual Solenoid Assembly (Items 15-25)

PARALLEL ARMS, MOUNTING SUPPORT PLATE AND QUICK ADJUSTABLE DOWN FORCE SPRINGS OPTION

RUB021/RUB022(RU78ff/B0366)

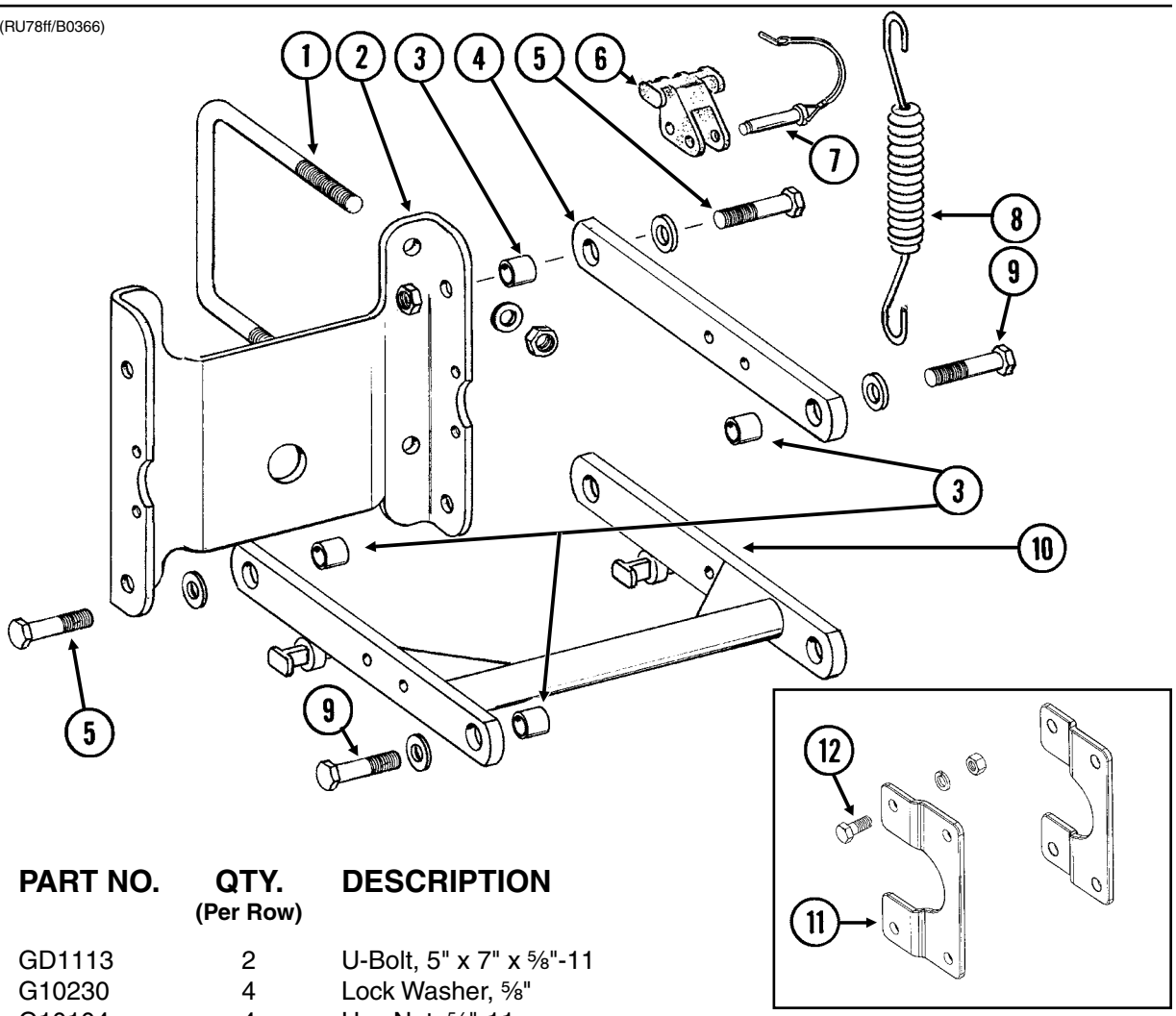

ITEM	PART NO.	QTY. (Per Row)	DESCRIPTION
1.	GD1113	2	U-Bolt, 5" x 7" x ⅝"-11
	G10230	4	Lock Washer, ⅝"
	G10104	4	Hex Nut, ⅝"-11
2.	GD10036	1	Mounting Support Plate
3.	GB0218	4	Bushing, 21⁄32" I.D. x ⅞" O.D. x 19⁄32" Long
4.	GD11422	2	Upper Parallel Arm
5.	G10732	4	Hex Head Cap Screw, ⅝"-18 x 2"
	GD7805	4	Special Washer, ⅝", Hardened
	G10412	4	Lock Nut, ⅝"-18
6.	GB0186	2	Spring Anchor
7.	GD14217	2	Tab Lock Pin, 7⁄16" x 1 ½"
8.	GD8249	2-4	Spring
9.		-	See “Hopper Support And Meter Drive”, Page P20
10.	GA5651	1	Lower Parallel Arm
11.	GB0366	2	Extension Bracket
12.	G10007	4	Hex Head Cap Screw, ⅝"-11 x 1 ½"
	G10230	4	Lock Washer, ⅝"
	G10104	4	Hex Nut, ⅝"-11
A.	G6325X	-	U-Bolt Package For 5" x 7" Toolbar, Includes: (2) GD1113, (4) G10230, (4) G10104

15" SEED OPENER DISC BLADE/BEARING ASSEMBLY AND SCRAPERS

(RU139)

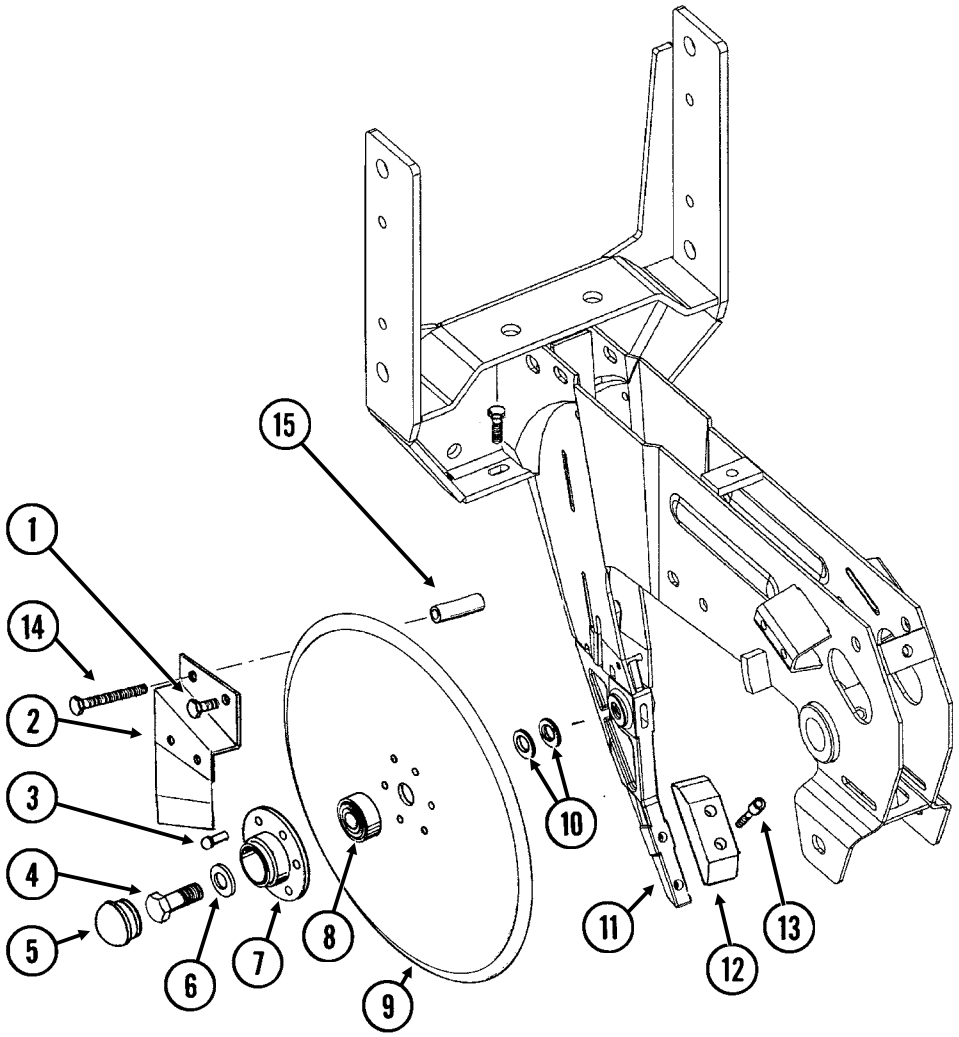

ITEM	PART NO.	QTY. (Per Row)	DESCRIPTION
1.	G10328	2	Hex Head Cap Screw, ⅜"-16 x ⅝"
	G10622	2	Serrated Flange Nut, ⅜"-16
2.	GA2012R	1	Disc Scraper, R.H.
	GA2012L	-	Disc Scraper, L.H. (Shown)
3.	G10427	12	Rivet, ¼" x ½"
4.	GD11017	1	Special Hex Head Cap Screw, ⅝"-11 x 1 ½", L.H. Threads
	G10007	1	Hex Head Cap Screw, ⅝"-11 x 1 ½"
5.	GD11845	2	Dust Cap
6.	G10204	2	Special Machine Bushing, ⅝" x 1" O.D.
7.	GD10473	2	Bearing Housing
8.	GA2014	2	Bearing
9.	GD11306	2	Disc Blade, 3.5 mm x 15"
10.	G10213	-	Machine Bushing, ⅝" (.030" Thick)(As Required)
11.		-	See “Shank Assembly”, Pages P2 And P3
12.	GB0301	1	Seed Tube Guard/Inner Scraper
13.	G10912	2	Hex Socket Head Cap Screw, 5⁄16"-18 x 1", Grade 8
14.	G10325	1	Hex Head Cap Screw, ⅜"-16 x 2 ¾"
	G10622	1	Serrated Flange Nut, ⅜"-16
15.	GD11259	1	Sleeve, ⅜" I.D. x ⅝" O.D. x 1 25⁄32" Long
A.	GA8324	-	Disc Blade/Bearing Assembly, Less Dust Cap (Items 3 And 7-9)

GAUGE WHEELS

(RU140)

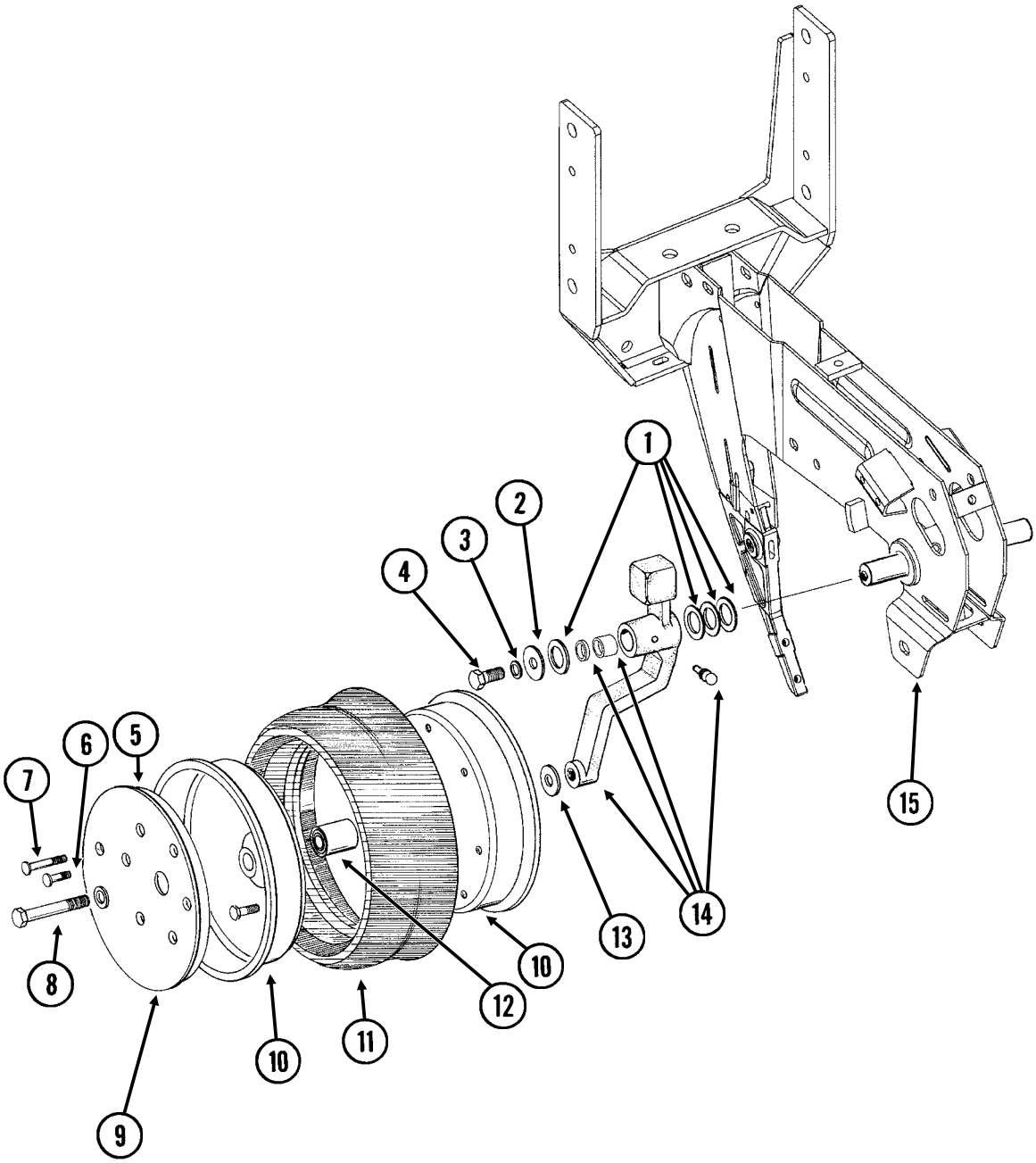

GAUGE WHEELS

ITEM	PART NO.	QTY. (Per Row)	DESCRIPTION
1.	G10940	-	Machine Bushing, 1" (.048" Thick)
2.	G10216	2	Washer, ½" USS
3.	G10228	2	Lock Washer, ½"
4.	G10014	1	Hex Head Cap Screw, ½"-13 x 1"
5.	GD11453	2	Cover
6.	G10338	12	Carriage Bolt, 5⁄16"-18 x 1 1⁄4"
	G10620	12	Serrated Flange Nut, 5⁄16"-18
7.	G10924	8	Carriage Bolt, 5⁄16"-18 x 1 ¾"
	G10620	8	Serrated Flange Nut, 5⁄16"-18
8.	G10010	2	Hex Head Cap Screw, ⅝"-11 x 3"
	G10230	2	Lock Washer, ⅝"
9.	G10018	14	Hex Head Cap Screw, 5⁄16"-18 x ⅝"
	G10109	14	Lock Nut, 5⁄16"-18, Grade 8
10.	GD11423	4	Half Wheel
11.	GD1086	2	Tire
12.	GA6171	2	Bearing
13.	G10204	2	Special Machine Bushing, ⅝" x 1" O.D.
14.	GA7975	1	Wheel Arm W/Grease Fitting, Bushings And Seals, L.H. (Shown)
	GA7976	1	Wheel Arm W/Grease Fitting, Bushings And Seals, R.H.
	G10640	1	Grease Fitting, ¼"-28 (Per Arm)
	GB0276	2	Bushing, 1" I.D. x 1 ¼" O.D. x 1" Long (Per Arm)
	GD10991	2	Seal (Per Arm)
15.		-	See “Shank Assembly”, Pages P2 And P3
A.	GA7949	-	Gauge Wheel Complete (Items 5-7 And 9-12)
B.	G1K296	-	Gauge Wheel Arm Bushing And Seal Driver Kit, Includes: (1) Seal Driver, (1) Bushing Driver, (1) Instruction

COVERING DISCS/SINGLE PRESS WHEEL

RUA054/RUB026(RU94d)

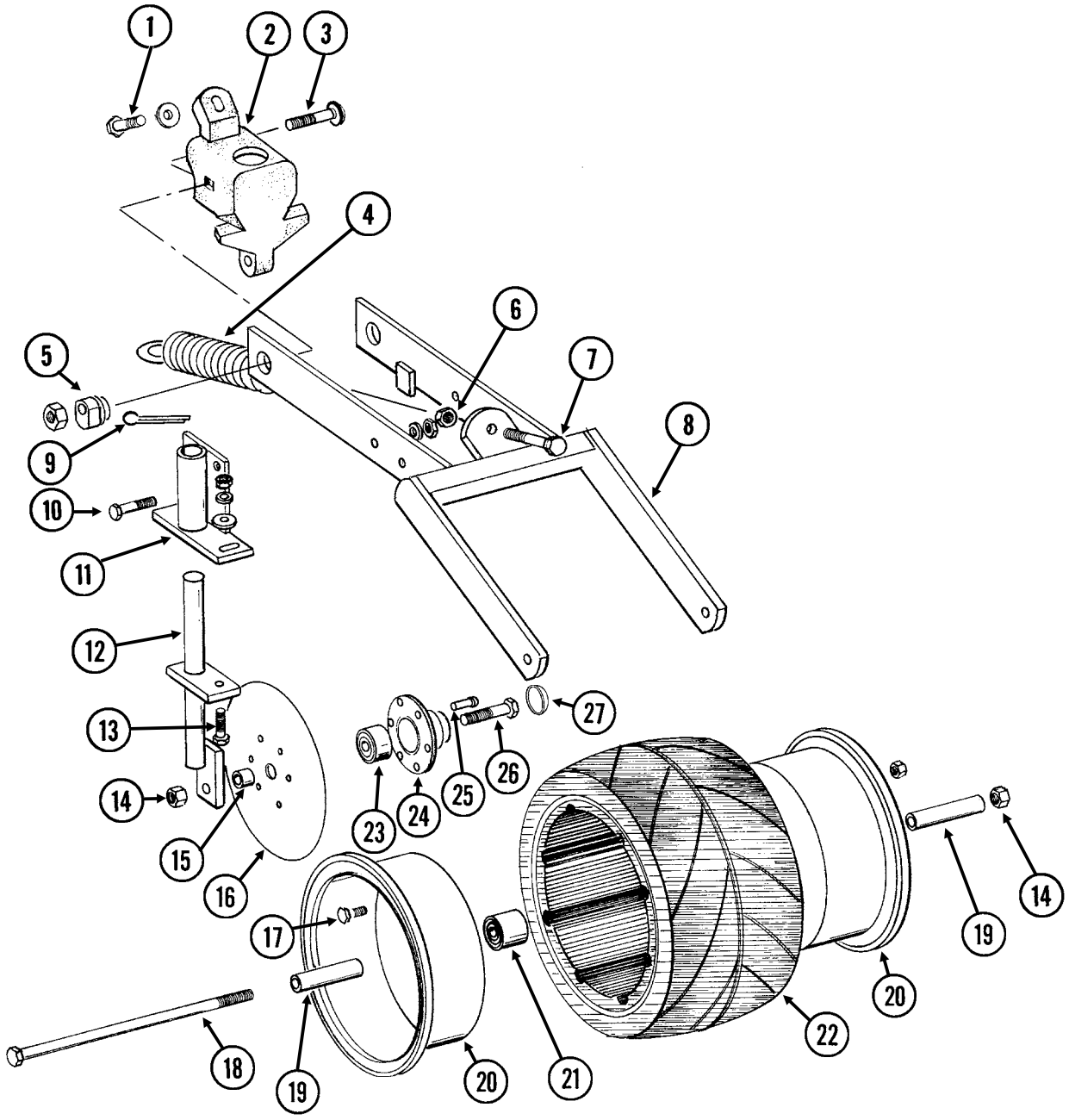

COVERING DISCS/SINGLE PRESS WHEEL

ITEM	PART NO.	QTY. (Per Row)	DESCRIPTION
1.	G10001	1	Hex Head Cap Screw, ⅜"-16 x 1"
	G10210	1	Washer, ⅜" USS
2.	GB0268	1	Wheel Arm Stop
3.	G10801	2	Carriage Bolt, ½"-13 x 2 ¼"
	G10216	2	Washer, ½" USS
	G10102	2	Hex Nut, ½"-13
4.	GA2054	1	Spring
5.	GB0239	2	Eccentric Bushing
6.	G10102	1	Hex Nut, ½"-13
7.	G10015	1	Adjusting Bolt, ½"-13 x 5"
8.	GA6619	1	Mounting Arm
9.	G10463	2	Cotter Pin, ¼" x 1 ½"
10.	G10171	4	Hex Head Cap Screw, 5⁄16"-18 x 1 ¼"
	G10232	4	Lock Washer, 5⁄16"
	G10106	4	Hex Nut, 5⁄16"-18
11.	GA6620	2	Bracket
12.	GA6618	2	Mount
13.	G10303	2	Carriage Bolt, 5⁄16"-18 x 1"
	G10219	2	Washer, 5⁄16" USS
	G10232	2	Lock Washer, 5⁄16"
	G10106	2	Hex Nut, 5⁄16"-18
14.	G10107	3	Lock Nut, ⅝"-11
15.	GD1109	2	Bushing, 41⁄64" I.D. x ⅞" O.D. x ¼" Long
16.	GD9290	2	Disc Blade, 8"
17.	G10018	7	Hex Head Cap Screw, 5⁄16"-18 x ⅝"
	G10109	7	Lock Nut, 5⁄16"-18, Grade 8
18.	G10152	1	Hex Head Cap Screw, 5/8"-11 x 9"
19.	GD3180-12	2	Sleeve, ⅝" I.D. x ⅞" O.D. x 2 ⅞" Long
20.	GD9562	2	Half Wheel
21.	GA6171	1	Bearing
22.	GD9305	1	Tire
23.	GA2014	2	Bearing
24.	GD10473	2	Bearing Housing
25.	G10427	12	Rivet, ¼" x ½"
26.	G10006	2	Hex Head Cap Screw, ⅝"-11 x 2 ¼"
27.	GD11845	2	Dust Cap
A.	GA6733	-	Single Press Wheel Complete W/Bearing (Items 17 And 20-22)
B.	GA6801	-	Covering Disc Blade Complete W/Bearing (Items 16 And 23-25)

“V” CLOSING WHEELS

(RU83i/RU83n)

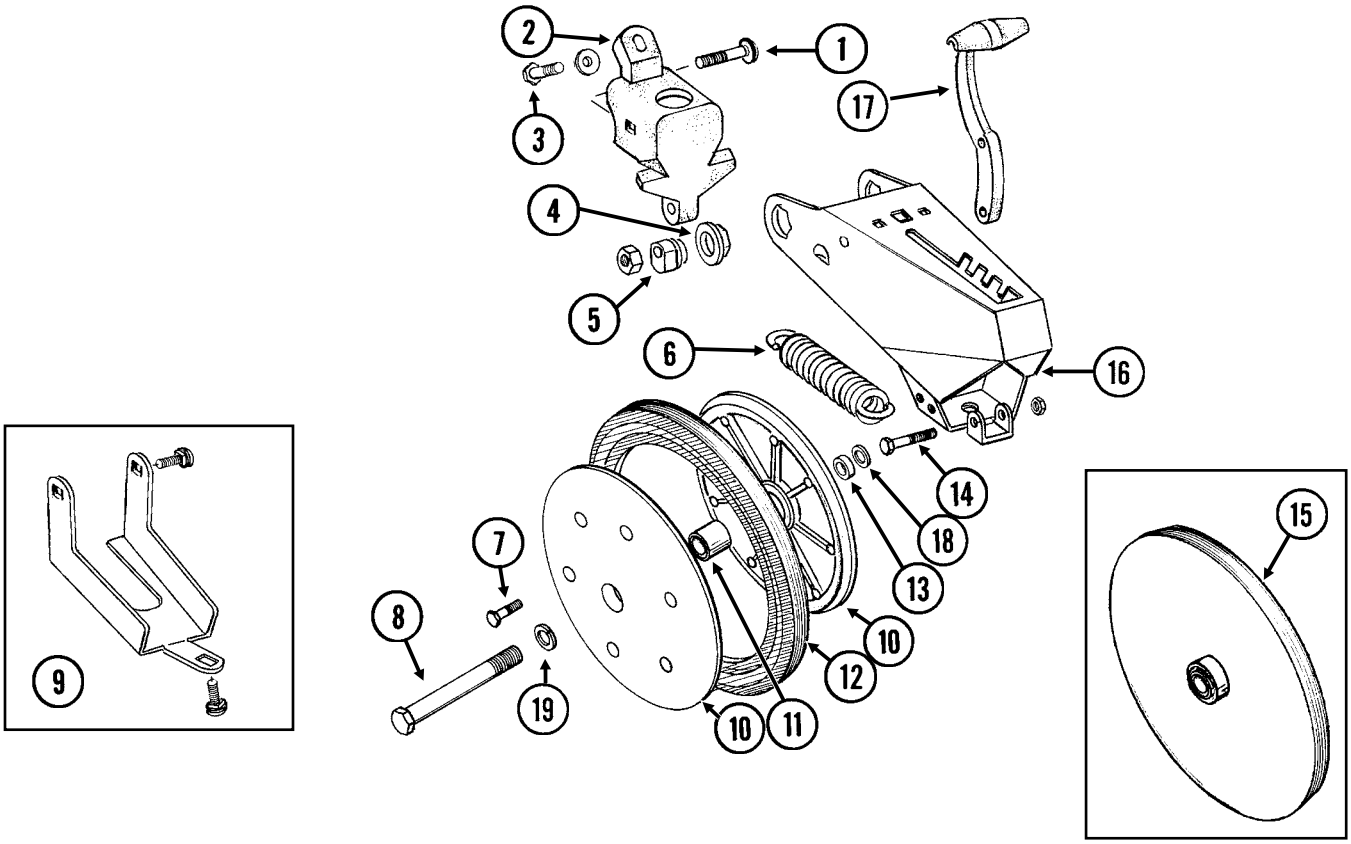

“V” CLOSING WHEELS

ITEM	PART NO.	QTY. (Per Row)	DESCRIPTION
1.	G10801	2	Carriage Bolt, ½"-13 x 2 ¼"
	G10111	2	Lock Nut, ½"-13
2.	GB0268	1	Wheel Arm Stop
3.	G10001	1	Hex Head Cap Screw, ⅜"-16 x 1"
	G10210	1	Washer, ⅜" USS
4.	GB0282	2	Stepped Bushing
5.	GB0239	2	Eccentric Bushing
6.	GD8460	1	Spring
7.	G10064	6	Hex Head Cap Screw, ¼"-20 x 1"
8.	G10013	2	Hex Head Cap Screw, ⅝"-11 x 3 ½"
	G10107	2	Lock Nut, ⅝"-11
9.	G1K345	-	Closing Wheel Shield Kit W/Hardware And Instruction
	G10308	2	Carriage Bolt, ⅜"-16 x ¾"
	G10599	1	Carriage Bolt, ⅜"-16 x 1 ¼"
	G10210	1	Washer, ⅜" USS
	G10229	3	Lock Washer, ⅜"
	G10101	3	Hex Nut, ⅜"-16
10.	GD9120	2	Nylon Half Wheel
11.	GA6171	1	Bearing
12.	GD1085	2	Rubber Tire, 1" x 12"
13.	GD1109	2	Bushing, 41⁄64" I.D. x ⅞" O.D. x ¼" Long
14.	G10133	1	Hex Head Cap Screw, 5⁄16"-18 x 1 ½"
	G10109	1	Lock Nut, 5⁄16"-18, Grade 8
15.	GA6597	-	Cast Iron Closing Wheel W/Bearing
	GA6171	-	Bearing
16.	GA8322	1	Arm
17.	GB0254	1	Lever
18.	GD7805	2	Special Washer, ⅝", Hardened
19.	G10230	2	Lock Washer, ⅝"
A.	GA6434	-	Rubber Closing Wheel Complete W/Bearing (Items 7 And 10-12)

DRAG CLOSING ATTACHMENT

RUB050(RU90c)

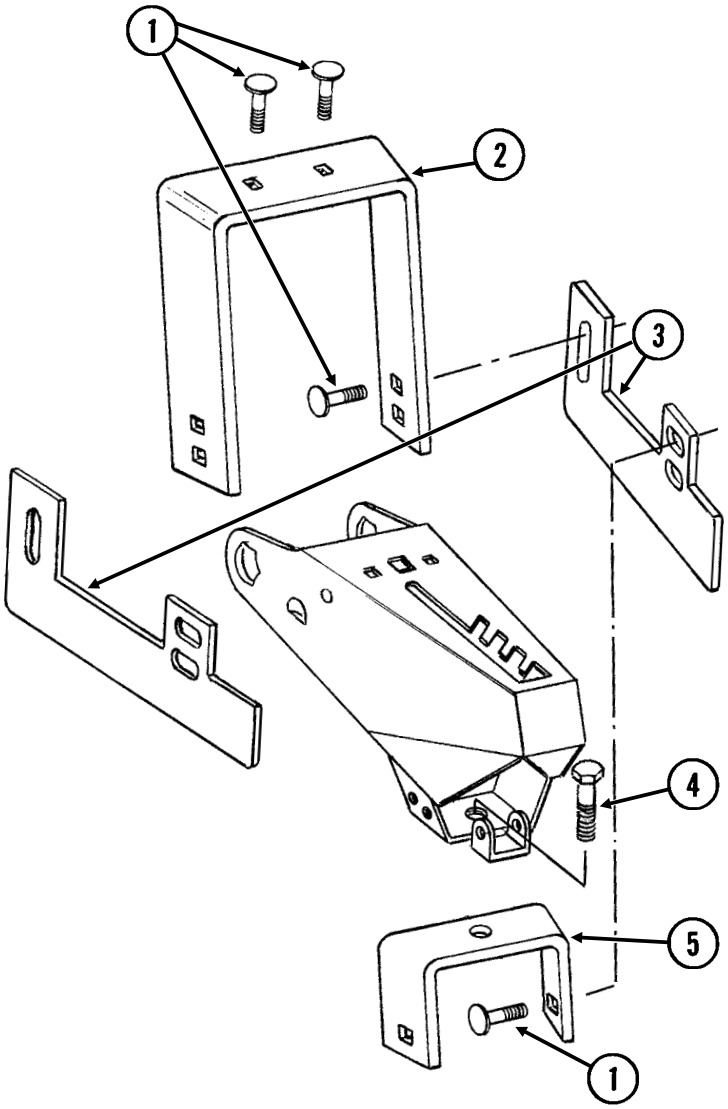

DRAG CLOSING ATTACHMENT

ITEM	PART NO.	QTY. (Per Row)	DESCRIPTION
1.	G10599	6	Carriage Bolt, ⅜"-16 x 1 ¼"
	G10210	6	Washer, ⅜" USS
	G10229	6	Lock Washer, ⅜"
	G10101	6	Hex Nut, ⅜"-16
2.	GD11508	1	Front Bracket
3.	GD11313	2	Blade
4.	G10007	1	Hex Head Cap Screw, ⅝"-11 x 1 ½"
	G10230	1	Lock Washer, ⅝"
	G10104	1	Hex Nut, ⅝"-11
5.	GD11509	1	Rear Bracket
A.	G7566X	-	Drag Closing Attachment Complete (Items 1-5)

HOPPER SUPPORT AND METER DRIVE

(METR22d)

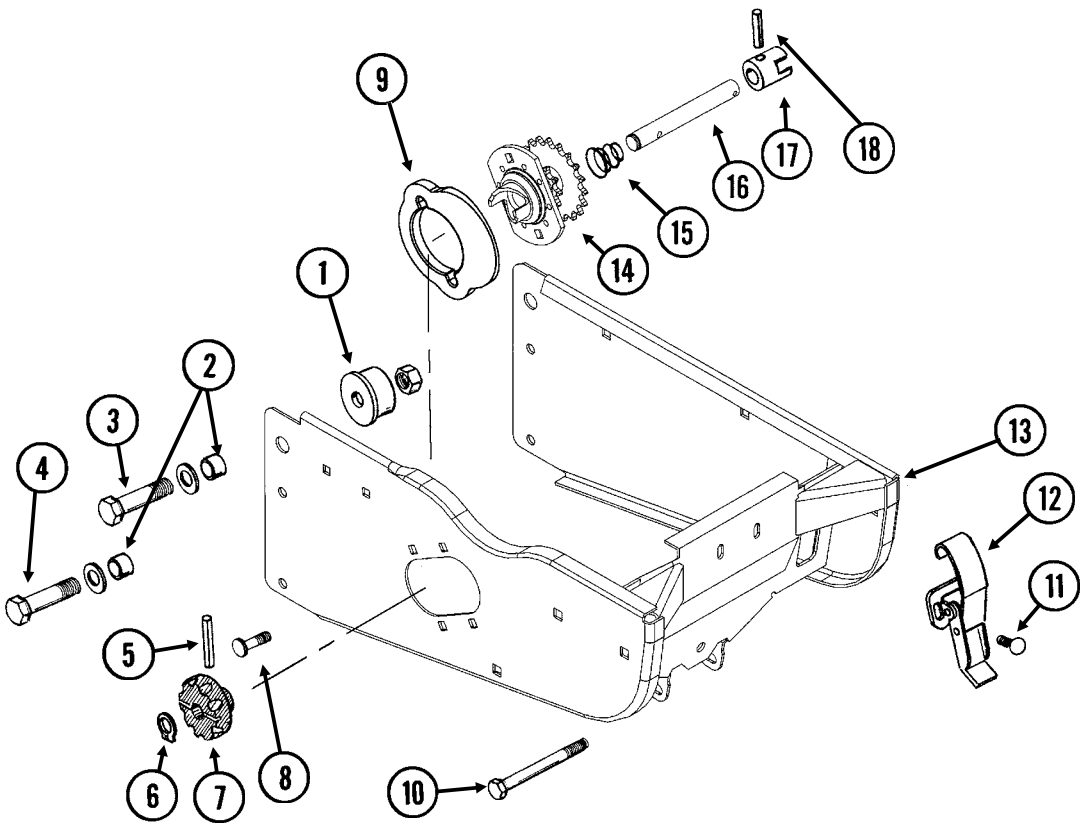

ITEM	PART NO.	QTY. (Per Row)	DESCRIPTION
1.	GB0314	2	Hopper Mount
2.	GB0218	4	Bushing, 21/32" I.D. x 7/8" O.D. x 19/32" Long
3.	G10752	2	Hex Head Cap Screw, 5/8"-18 x 2 1/4"
	GD7805	2	Special Washer, 5/8", Hardened
	G10412	2	Lock Nut, 5/8"-18
4.	G10751	2	Hex Head Cap Screw, 5/8"-18 x 1 3/4"
	GD7805	2	Special Washer, 5/8", Hardened
	G10412	2	Lock Nut, 5/8"-18
5.	G10602	1	Spring Pin, 1/4" x 1 1/2"
6.	G10567	1	External Retaining Ring, 5/8"
7.	GD11239	1	Knob
8.	G10338	2	Carriage Bolt, 5/16"-18 x 1 1/4"
	G10620	2	Serrated Flange Nut, 5/16"-18
9.	GB0331	1	Clutch Adapter Plate
10.	G10061	1	Hex Head Cap Screw, 3/8"-16 x 3 1/2"
	G10210	2	Washer, 3/8" USS
	G10108	1	Lock Nut, 3/8"-16
11.	G10309	2	Carriage Bolt, 1/4"-20 x 5/8", Grade 2
	G10621	2	Serrated Flange Nut, 1/4"-20
12.	GA2007	1	Hopper Hold Down Latch
13.	GA10155	1	Hopper Support
14.	GA10137	1	Double Sprocket And Bearing, Drive Clutch, 11/19 Tooth
15.	GD11413	1	Spring
16.	GD15747	1	Shaft
17.	GB0278	1	Coupler
18.	G10546	1	Spring Pin, 3/16" x 1 1/4"
A.	GA10151	-	Meter Drive Assembly Complete, 11/19 Tooth (Items 5-7 And 14-18)

SEED HOPPER AND LID

(RU87e/RU87a)

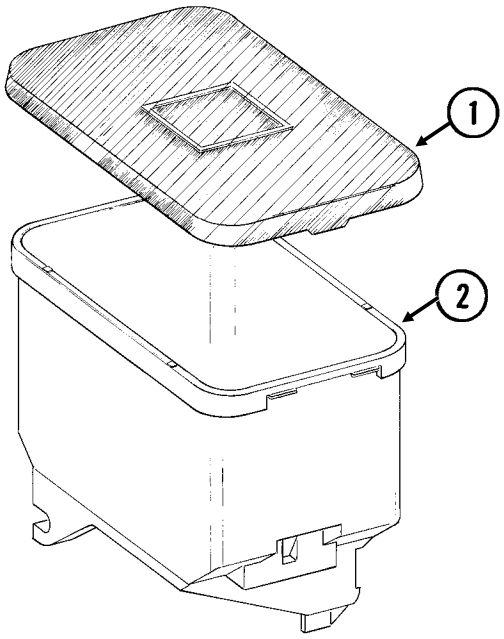

ITEM	PART NO.	QTY. (Per Row)	DESCRIPTION
1.	GD11279	1	Lid
2.	GA9714	1	Seed Hopper, Reinforced

FINGER PICKUP SEED METER

RUA015/RUA056/RUA057(RU13k/RU13d)

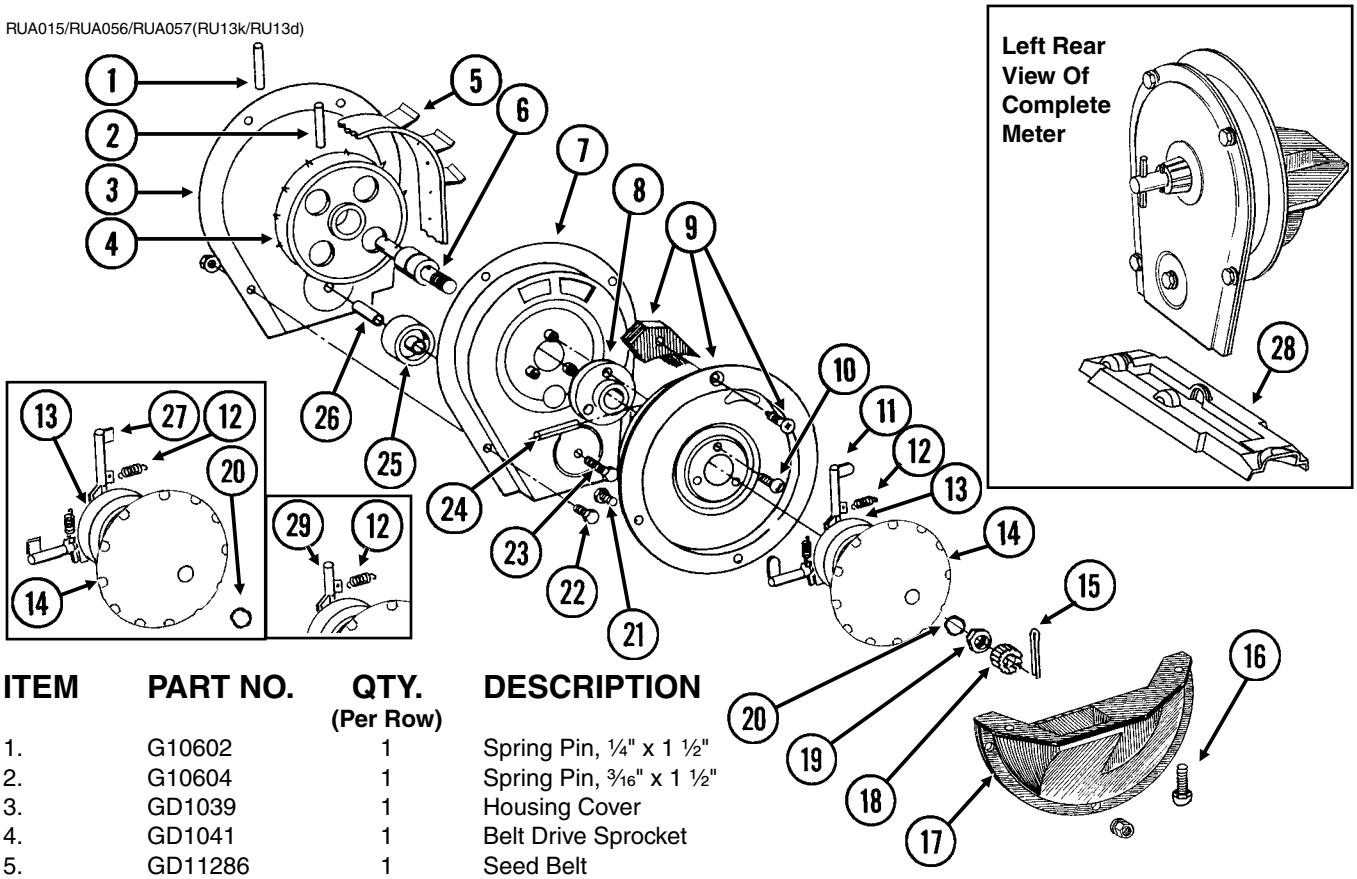

ITEM	PART NO.	QTY. (Per Row)	DESCRIPTION
1.	G10602	1	Spring Pin, ¼" x 1 ½"
2.	G10604	1	Spring Pin, 3⁄16" x 1 ½"
3.	GD1039	1	Housing Cover
4.	GD1041	1	Belt Drive Sprocket
5.	GD11286	1	Seed Belt
6.	GA2019	1	Bearing
7.	GA2018	1	Conveyor Housing
8.	GB0110	1	Bearing Housing
9.	GR1569	1	Carrier Plate W/Brush And Screw
	GA2020	-	Brush
	G10690	-	Rolling Thread Screw, No. 10 x ¾"
10.	G10401	3	Slotted Hex Washer Head Screw, No. 10-32 x ⅝"
11.	GD10733	12	Finger, Corn
12.	GD6501	12	Spring
13.	GB0111	1	Cam
14.	GD11528	1	Finger Holder
15.	G10470	1	Cotter Pin, 5⁄32" x 1"
16.	G11009	2	Locking Thumbscrew, 5⁄16"-18 x ¾"
17.	GD11311	1	Seed Baffle
18.	GD1083	1	Cover Nut
19.	G10500	1	Jam Nut, ⅝"-18 UNF
20.	GA8343	1	Wave Washer, ⅝" (Triple Wave)
21.	G10020	3	Hex Head Cap Screw, ¼"-20 x ⅝"
	G10323	3	Hex Flange Nut, ¼"-20, No Serrations
22.	G10022	4	Hex Head Cap Screw, ¼"-20 x ½"
	G10621	4	Serrated Flange Nut, ¼"-20
23.	G10021	1	Hex Head Cap Screw, ¼"-20 x 1 ½"
	G10621	1	Serrated Flange Nut, ¼"-20
24.	G10603	1	Spring Pin, ¼" x 1 ¼"
25.	GD1042	1	Idler
26.	GB0120	1	Bushing, 17⁄64" I.D. x 1 1⁄32" Long
27.	GD10226	12	Finger, Oil Sunflower
28.	GD15698	1	Shank Cover, Finger Pickup Seed Meter
29.	GD11787	-	Half Rate Blank Finger
A.	GR1487	-	Finger Assembly, Corn (Items 11-14 And 20)
B.	GR1327	-	Finger Assembly, Oil Sunflower (Items 12-14, 20 And 27)

BRUSH-TYPE SEED METER

RUA037/RUA056/RUA057(RU14f)

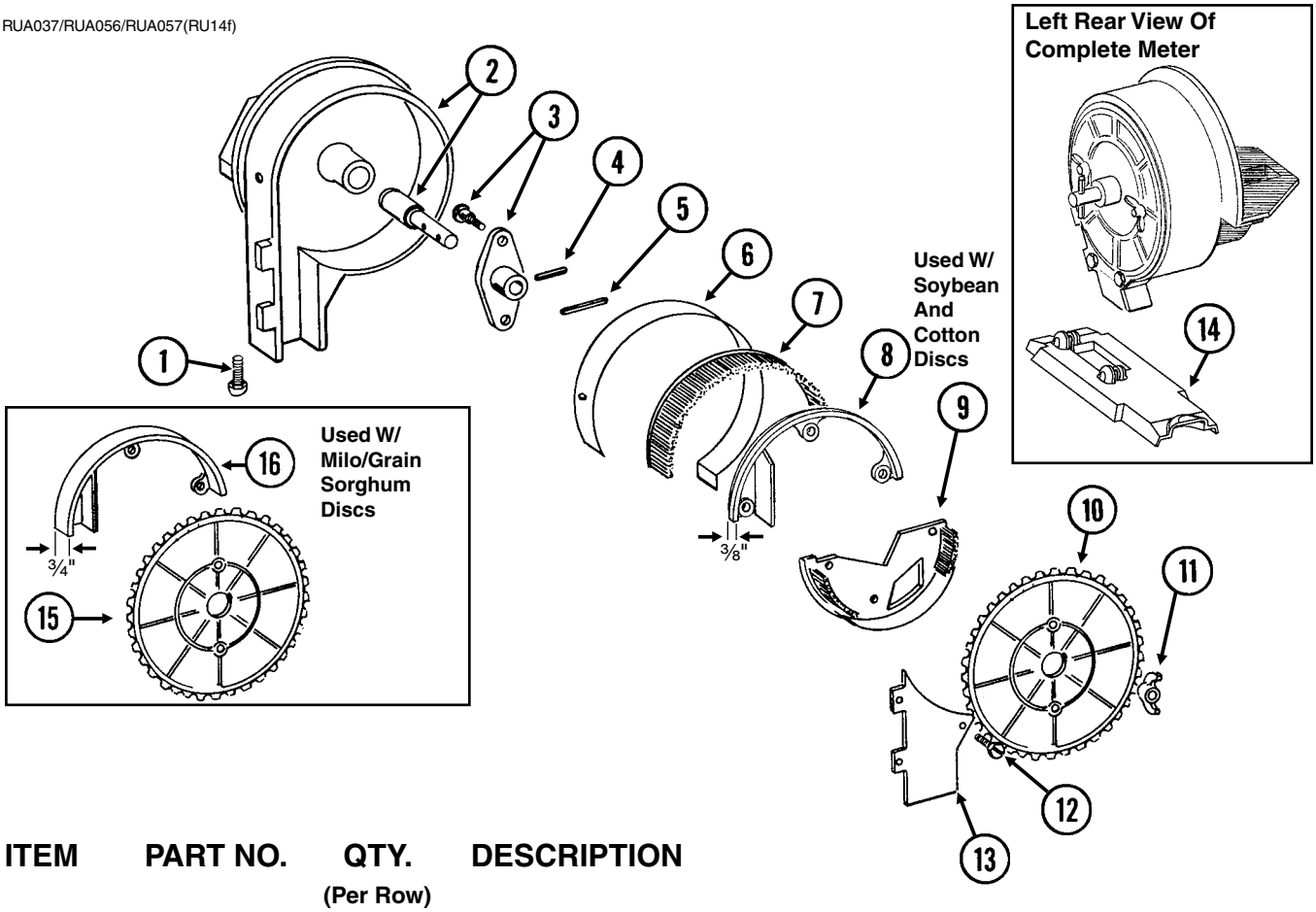

ITEM	PART NO.	QTY. (Per Row)	DESCRIPTION
1.	G11009	2	Locking Thumbscrew, 5/16"-18 x 3/4"
2.	GA6027	1	Housing W/Bearing
	GA5698	-	Bearing
3.	GA6038	1	Hub W/Shoulder Bolts
	GD1755	-	Shoulder Bolt, 1/4"-20 (2 Used)
4.	G10603	1	Spring Pin, 1/4" x 1 1/4"
5.	G10602	1	Spring Pin, 1/4" x 1 1/2"
6.	GD8778	1	Wear Strip
7.	GA5699	1	Upper Brush
8.	GD11122	1	Upper Brush Retainer (Used W/Soybean And Cotton Discs)
9.	GA5834	1	Lower Brush
10.	GA5794	-	Seed Disc, Soybean, 60 Cell, Black Color-Coded
	GA6184	-	Seed Disc, Specialty Soybean, 48 Cell, Dark Blue Color-Coded
	GA5796	-	Seed Disc, Cotton, Acid-Delinted, 30 Cell, White Color-Coded
	GA6168	-	Seed Disc, Large Cotton, Acid-Delinted, 36 Cell, Tan Color-Coded
	GA6478	-	Seed Disc, High-Rate Cotton, Acid-Delinted, 48 Cell, Light Green Color-Coded
	GA6182	-	Seed Disc, Hill-Drop Cotton, Acid-Delinted, 12 Cell, Brown Color-Coded
	GA7255	-	Seed Disc, Small Hill-Drop Cotton, Acid-Delinted, 12 Cell, Dark Green Color-Coded
11.	G10531	2	Wing Nut W/Nylon Insert, 1/4"-20
12.	G11151	9	Hex Washer Head Screw, No. 10-24 x 1/2"
	G10634	-	Slotted Tap Screw, No. 10-24 x 5/8" (Use As Required)
13.	GD7878	1	Cover
14.	GD15699	1	Shank Cover, Brush-Type Seed Meter
15.	GA5982	-	Seed Disc, Small Milo/Grain Sorghum, 30 Cell, Red Color-Coded
	GA6187	-	Seed Disc, Large Milo/Grain Sorghum, 30 Cell, Light Blue Color-Coded
	GA5795	-	Seed Disc, High-Rate Small Milo/Grain Sorghum, 60 Cell, Red Color-Coded
	GA6633	-	Seed Disc, High-Rate Large Milo/Grain Sorghum, 60 Cell, Yellow Color-Coded
16.	GD8237	-	Upper Brush Retainer (Used W/Milo/Grain Sorghum Discs)

SPRING TOOTH INCORPORATOR

RUA055(RU95)

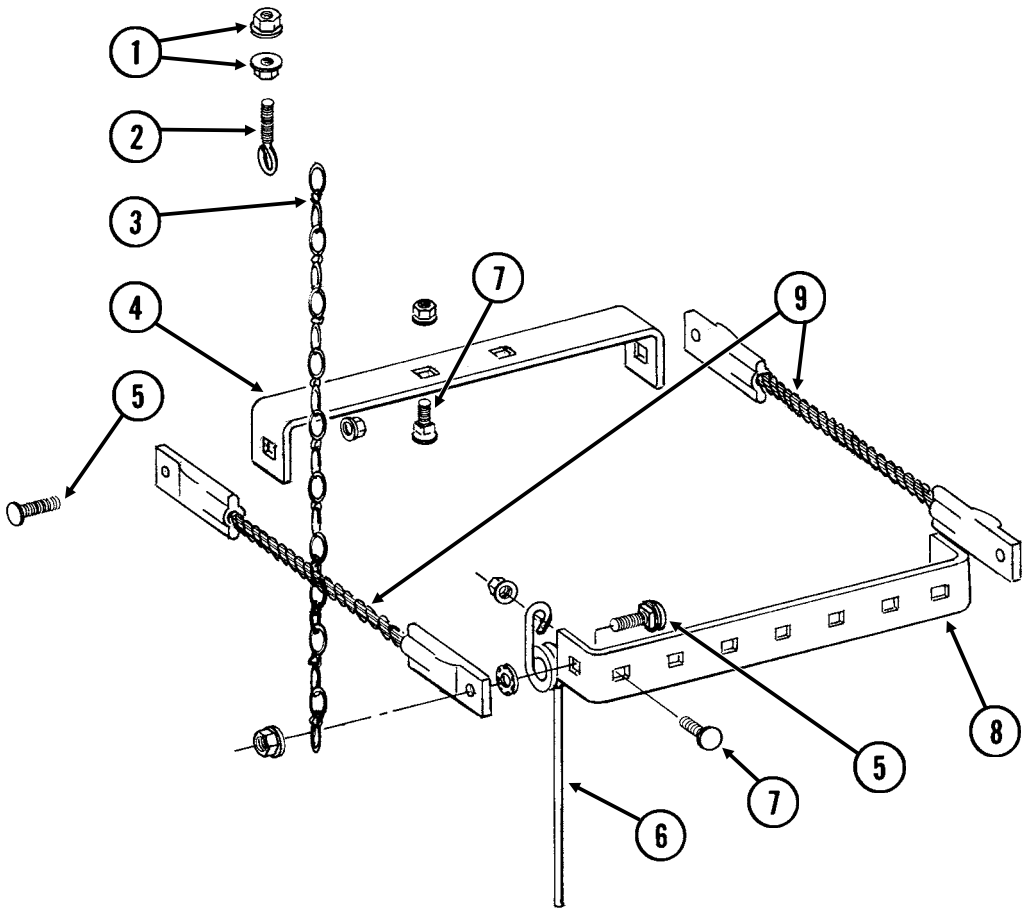

ITEM	PART NO.	QTY. (Per Row)	DESCRIPTION
1.	G10621	4	Serrated Flange Nut, ¼"-20
2.	GD2460	2	Eyebolt, ¼"-20
3.	G3305-01	4	Twin Loop Chain, 9 Links
4.	GD1143	1	Front Bracket
5.	G10305	4	Carriage Bolt, ⅜"-16 x 1"
	G10529	4	External Tooth Lock Washer, ⅜"
	G10622	4	Serrated Flange Nut, ⅜"-16
6.	GD1145	7	Spring Tooth
7.	G10308	9	Carriage Bolt, ⅜"-16 x ¾"
	G10622	9	Serrated Flange Nut, ⅜"-16
8.	GD1144	1	Rear Bracket
9.	GA2094	2	Cable Assembly

ROW UNIT MOUNTED NO TILL COULTER

(D14398/RU102c/RU152)

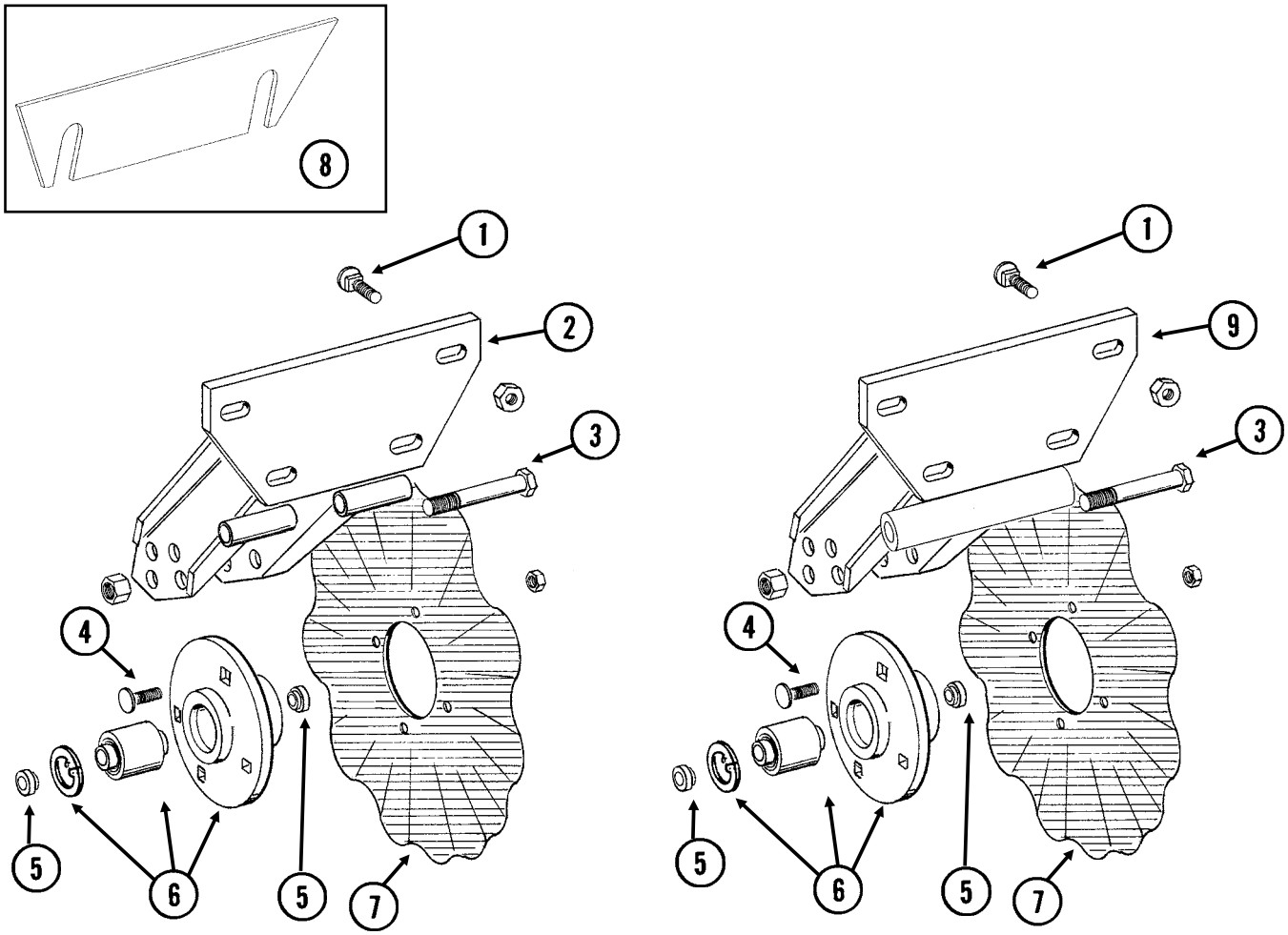

STYLE A **STYLE B**

ITEM	PART NO.	QTY. (Per Row)	DESCRIPTION
1.	G10574	4	Carriage Bolt, ½"-13 x 1 ¼"
	G10111	4	Lock Nut, ½"-13
2.	GA5625	1	Arm (Style A)
3.	G10036	1	Hex Head Cap Screw, ⅝"-11 x 4"
	G10107	1	Lock Nut, ⅝"-11
4.	G10574	4	Carriage Bolt, ½"-13 x 1 ¼"
	G10111	4	Lock Nut, ½"-13
5.	GD11677	2	Adapter
6.	GA8641	1	Hub W/Bearing And Retaining Ring
	GA8603	-	Double Row Bearing
	GD11652	-	Retaining Ring, 2 7⁄16"
7.	GD7803	-	Disc Blade, Fluted, 1", 8 Flutes (Shown)
	GD7804	-	Disc Blade, Bubbled, 1"
	GD9254	-	Disc Blade, Fluted, ¾", 13 Flutes
8.	GD14398	-	Spacer
9.	GA11520	1	Arm (Style B)

ROW UNIT MOUNTED DISC FURROWER

RUA059/RUA058(RU99/RU98g)

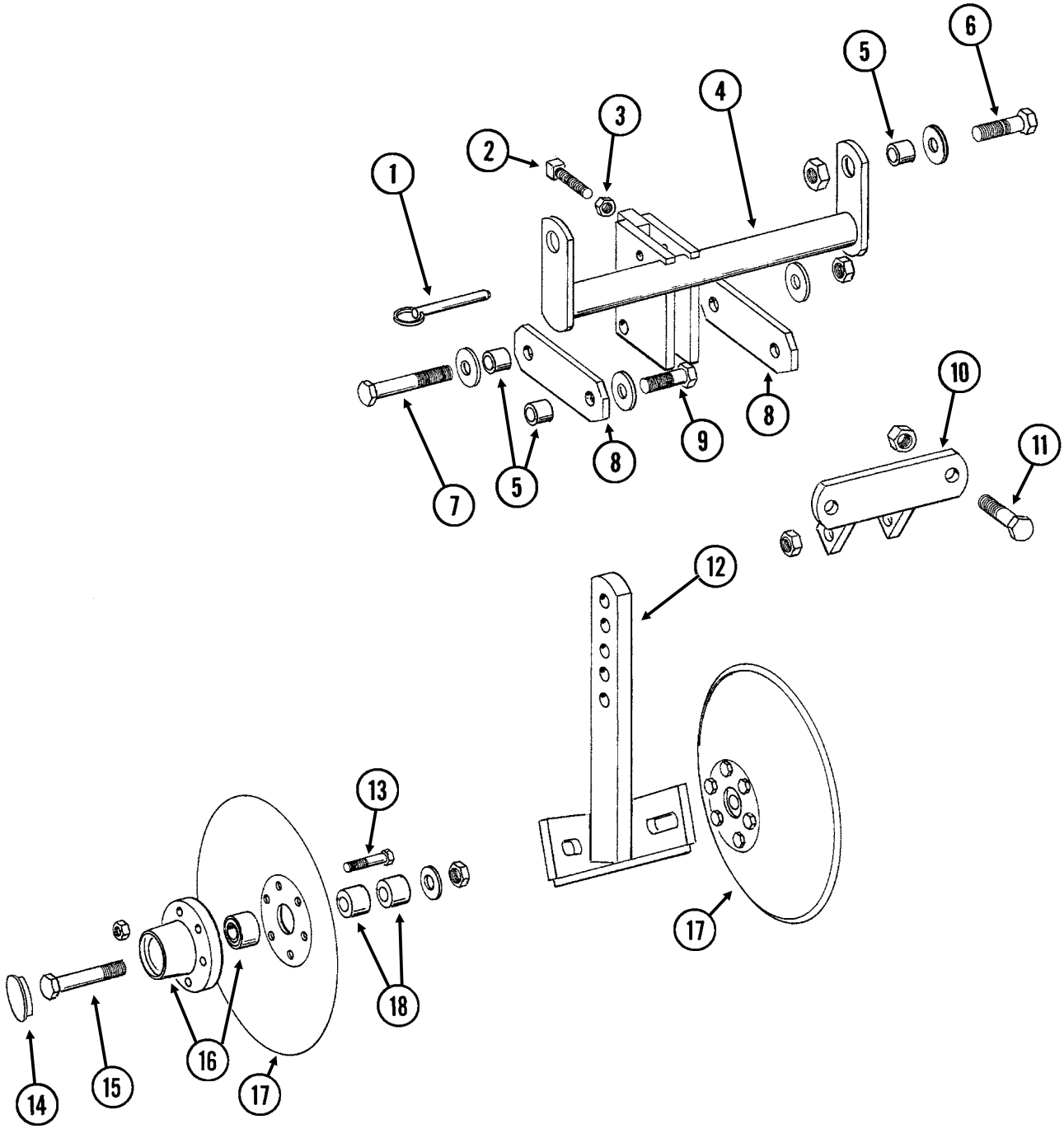

ROW UNIT MOUNTED DISC FURROWER

ITEM	PART NO.	QTY. (Per Row)	DESCRIPTION
1.	G10536	1	Detent Pin, ½" x 2 ½" Grip
2.	G10597	1	Square Head Set Screw, ⅝"-11 x 2 ¼"
3.	G10503	1	Hex Jam Nut, ⅝"-11, Grade 2
4.	GA5719	1	Mounting Bracket
5.	GD7889	6	Bushing, 1" O.D. x 9⁄16" I.D. x 7⁄16" Long
6.	G10039	2	Hex Head Cap Screw, ½"-13 x 1 ¾"
	GD14674	2	Special Washer, ½", Hardened
	G10111	2	Lock Nut, ½"-13
7.	G10585	1	Hex Head Cap Screw, ½"-13 x 3 ¼"
	G10216	2	Washer, ½" USS
	G10111	1	Lock Nut, ½"-13
8.	GD7890	2	Link
9.	G10017	2	Hex Head Cap Screw, ½"-13 x 1 ½"
	G10216	2	Washer, ½" USS
	G10111	2	Lock Nut, ½"-13
10.	GA5715	1	Anchor
11.	G10017	2	Hex Head Cap Screw, ½"-13 x 1 ½"
	G10111	2	Lock Nut, ½"-13
12.	GA5718	1	Support Arm
13.	G10572	6	Truss Head Slotted Machine Screw, 5⁄16"-18 x ⅞"
	G10106	6	Hex Nut, 5⁄16"-18
14.	GD1132	2	Dust Cap
15.	G10318	2	Hex Head Cap Screw, ⅝"-11 x 4 ½"
	GD7805	2	Special Washer, ⅝", Hardened
	G10107	2	Lock Nut, ⅝"-11
16.	GA5654	2	Hub W/Bearings
	GA2014	-	Bearing
17.	GD7823	-	Disc Blade, Solid, 12" (Shown)
	GD8307	-	Disc Blade, Notched, 12"
18.	GD7817-01	2	Spacer, 11⁄16" I.D. x ¾" Long
	GD7817-04	2	Spacer, 11⁄16" I.D. x ½" Long

ROW UNIT MOUNTED RESIDUE WHEEL

(RU103dd/RU103d)

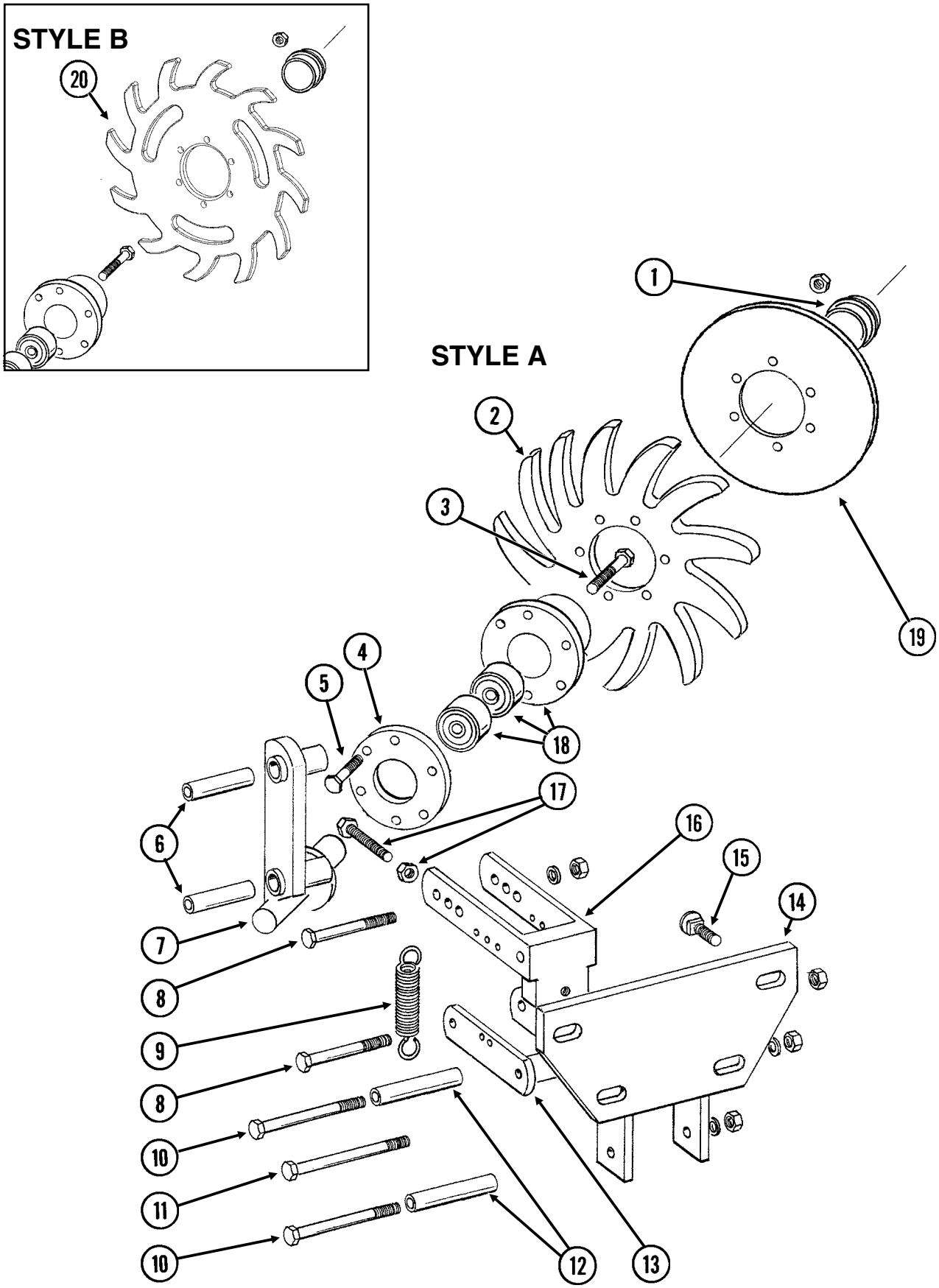

ROW UNIT MOUNTED RESIDUE WHEEL

ITEM	PART NO.	QTY. (Per Row)	DESCRIPTION
1.	GD1132	1	Dust Cap
2.	GD10552	1	Wheel, 12 Tine, ⅜" x 12"
3.	G10006	1	Hex Head Cap Screw, ⅝"-11 x 2 ¼"
4.	GD9724	1	Backing Plate
5.	G10133	6	Hex Head Cap Screw, 5⁄16"-18 x 1 ½"
	G10109	6	Lock Nut, 5⁄16"-18, Grade 8
6.	GD9720	2	Spacer, ½" x 2 3⁄16" Long
7.	GA6838	1	Wheel Mount
8.	G10033	2	Hex Head Cap Screw, ½"-13 x 3 ½"
	G10228	2	Lock Washer, ½"
	G10102	2	Hex Nut, ½"-13
9.	GD5857	2	Spring
10.	G10045	2	Hex Head Cap Screw, ½"-13 x 4 ½"
	G10228	2	Lock Washer, ½"
	G10102	2	Hex Nut, ½"-13
11.	G10348	1	Hex Head Cap Screw, ½"-13 x 5" (Lockup Bolt)
	G10111	1	Lock Nut, ½"-13
12.	GD9715	2	Spacer, ½" x 3" Long
13.	GA6834	1	Lower Link
14.	GA6832	1	Mount
15.	G10574	4	Carriage Bolt, ½"-13 x 1 ¼"
	G10111	4	Lock Nut, ½"-13
16.	GA6833	1	Upper Link
17.	G10371	1	Hex Head Cap Screw, ½"-13 x 3", Full Thread
	G10501	1	Hex Jam Nut, ½"-13, Grade 2
18.	GA5654	1	Hub W/Bearings
	GA2014	-	Bearing
19.	GD12534	-	Cover
20.	GB0387	1	Wheel, 12 Tine, ⅜" x 12"
A.	GA7446	-	Wheel Assembly, 12 Tine (Items 2, 4, 5 And 18)
B.	GA12236	-	Wheel Assembly, 12 Tine, R.H. (Items 4, 5, 18 And 20)

COULTER MOUNTED RESIDUE WHEELS

(RU104uuu/RU153)

STYLE A - Used With Style A Row Unit Mounted No Till Coulter

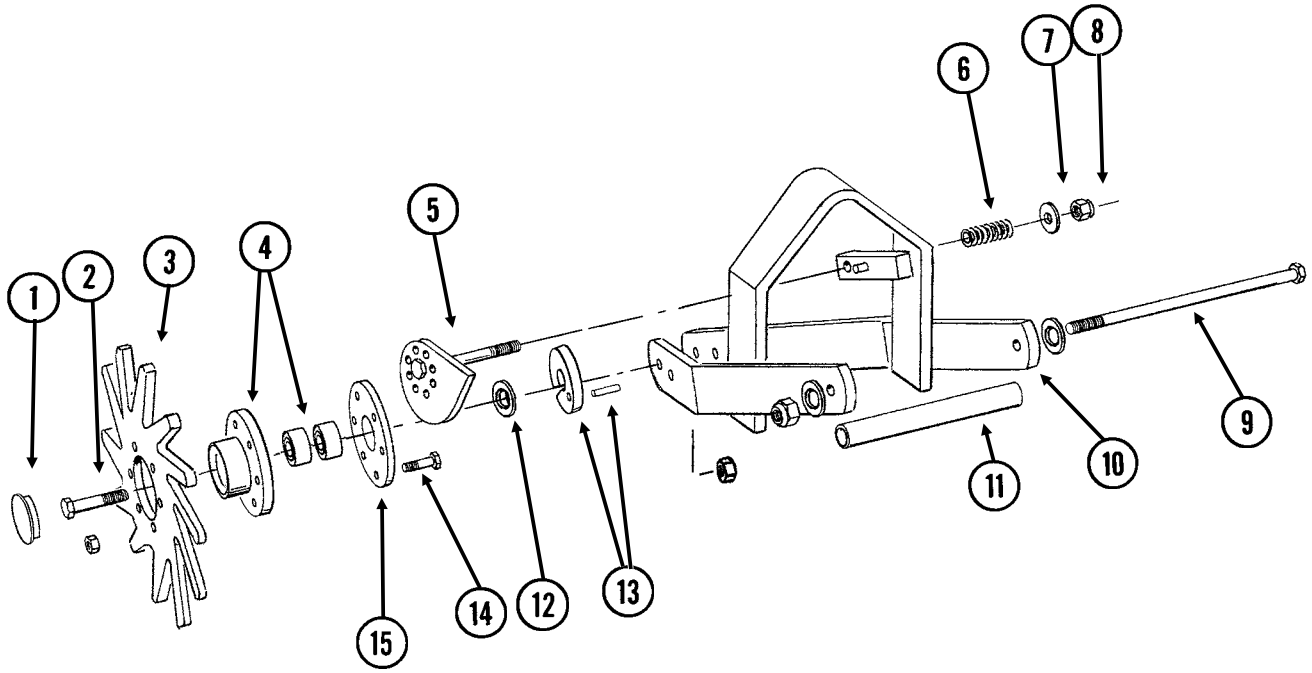

STYLE B - Used With Style B Row Unit Mounted No Till Coulter

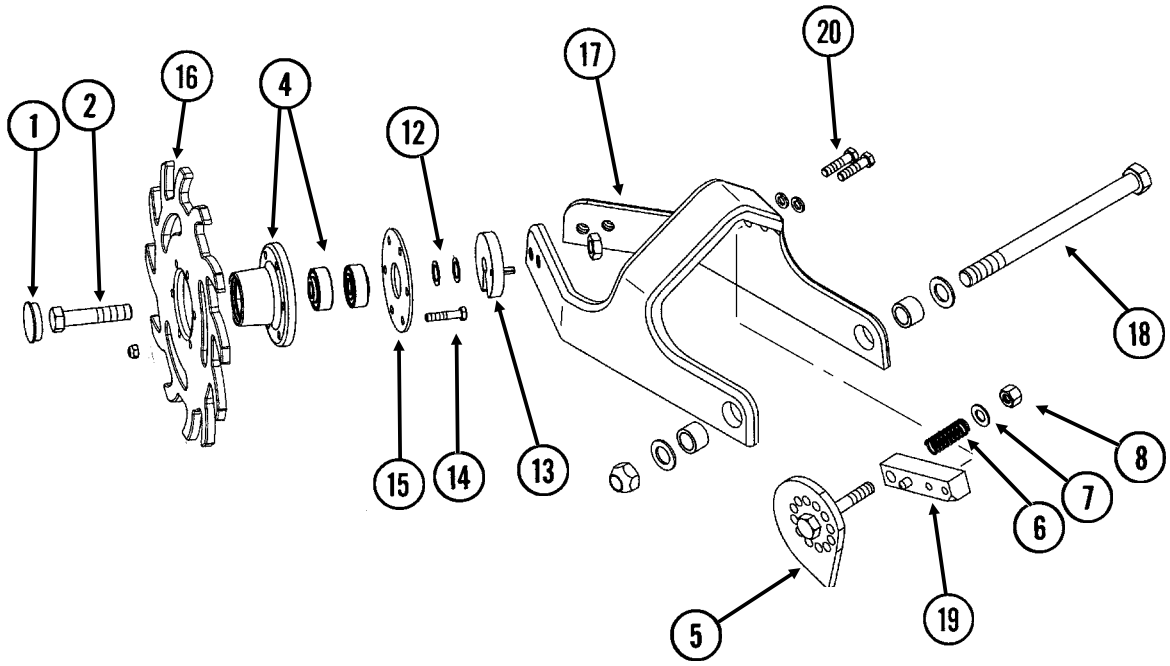

COULTER MOUNTED RESIDUE WHEELS

ITEM	PART NO.	QTY. (Per Row)	DESCRIPTION
1.	GD1132	2	Dust Cap
2.	G10010	2	Hex Head Cap Screw, ⅝"-11 x 3"
	G10503	2	Hex Jam Nut, ⅝"-11, Grade 2
3.	GD10552	2	Wheel, 12 Tine, ⅜" x 12"
4.	GA5654	2	Hub W/Bearings
	GA2014	-	Bearing
5.	GA7412	1	Cam
6.	GD10519	1	Spring
7.	G10206	1	Washer, ½" SAE
8.	G10974	1	Lock Nut W/Nylon Insert, ½"-13
9.	G11098	1	Hex Head Cap Screw, ½"-13 x 9 ½", Grade 8
	GD14674	2	Special Washer, ½", Hardened
	G10974	1	Lock Nut W/Nylon Insert, ½"-13
10.	GA7271	1	Mount
11.	GD10526	1	Sleeve, 7 ½"
12.	G10213	2-4	Machine Bushing, ⅝" (.030" Thick)
13.	GA8760	2	Weed Guard W/Spring Pin
	G10765	-	Spring Pin, ¼" x 1"
14.	G10133	12	Hex Head Cap Screw, 5⁄16"-18 x 1 ½"
	G10109	12	Lock Nut, 5⁄16"-18, Grade 8
15.	GD9724	2	Backing Plate
16.	GB0387	2	Wheel, 12 Tine, ⅜" x 12"
17.	GB0401	1	Mount
18.	G11236	1	Hex Head Cap Screw, ¾"-10 x 10 ½"
	GB0383	2	Bushing, 1 ⅛" O.D. x 25⁄32" I.D. x ¾" Long
	G10194	2	Washer, ¾" SAE
	G11228	1	Lock Nut, ¾"-10
19.	GA12256	1	Locking Pin
20.	G10003	2	Hex Head Cap Screw, ⅜"-16 x 1 ½"
	G10229	2	Lock Washer, ⅜"
A.	GA7446	-	Wheel Assembly, 12 Tine, R.H. (Items 3, 4, 14 And 15) (Shown)
	GA7445	-	Wheel Assembly, 12 Tine, L.H. (Items 3, 4, 14 And 15)
B.	GA12236	-	Wheel Assembly, 12 Tine, R.H. (Items 4, 14, 15 And 16) (Shown)
	GA12235	-	Wheel Assembly, 12 Tine, L.H. (Items 4, 14, 15 And 16)

FRAME MOUNTED COULTER W/RESIDUE WHEELS

(RU135c/RU135g/RU135hh)

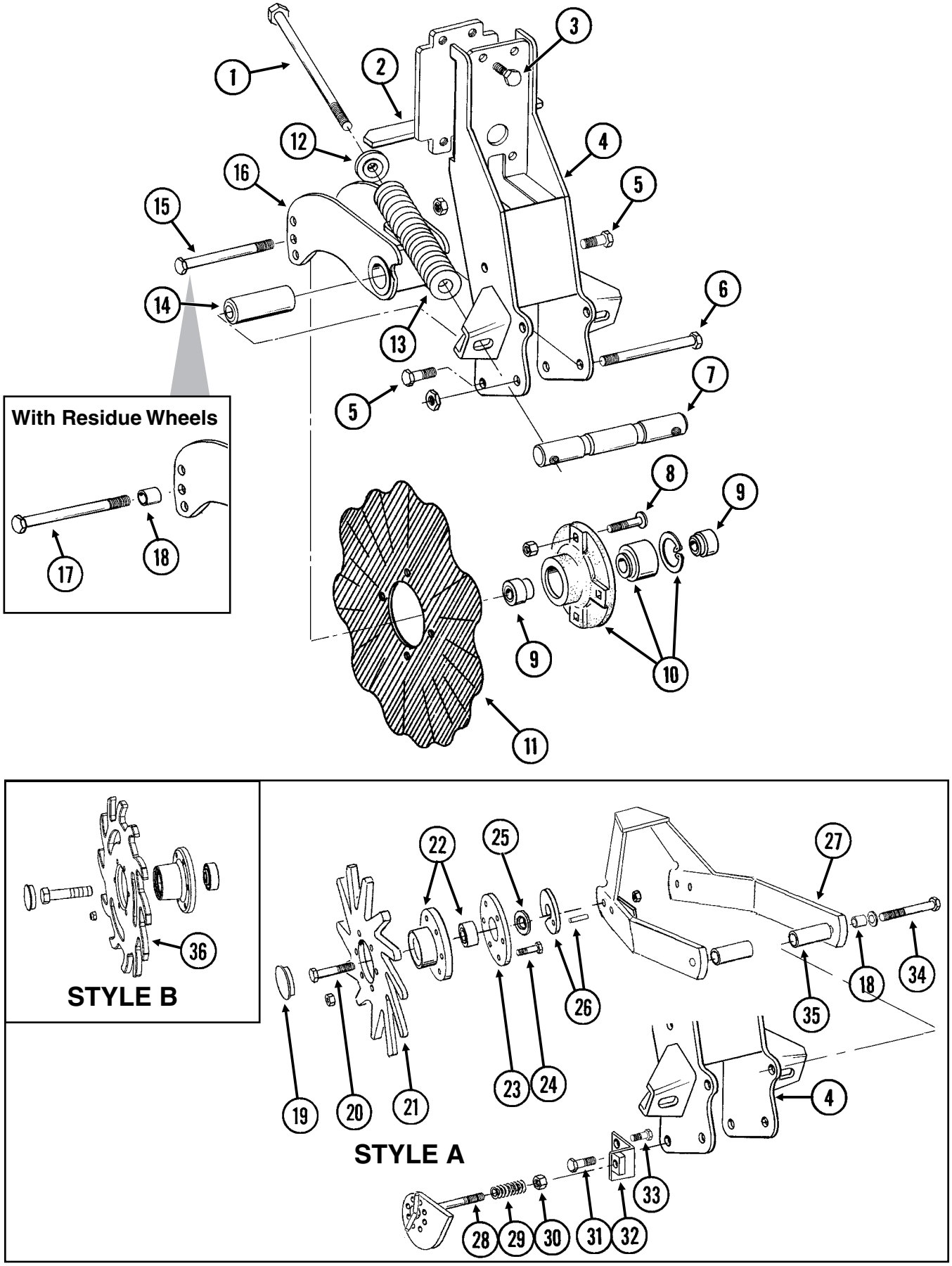

FRAME MOUNTED COULTER W/RESIDUE WHEELS

ITEM	PART NO.	QTY. (Per Row)	DESCRIPTION
1.	G11010	2	Hex Head Cap Screw, ¾"-10 x 12"
2.	GA9844	1	Plate W/Angle
3.	G10039	4	Hex Head Cap Screw, ½"-13 x 1 ¾"
4.	GA9131	1	Coulter Frame
5.	G10007	4	Hex Head Cap Screw, ⅝"-11 x 1 ½"
	G10107	4	Lock Nut, ⅝"-11
6.	G10400	1	Hex Head Cap Screw, ¾"-10 x 6 ½"
	G10112	1	Lock Nut, ¾"-10
7.	GD12826	1	Spring Anchor Bar
8.	G10574	4	Carriage Bolt, ½"-13 x 1 ¼"
	G10111	4	Lock Nut, ½"-13
9.	GD12827	2	Adapter
10.	GA8641	1	Hub W/Bearing And Retaining Ring
	GA8603	1	Double Row Bearing
	GD11652	1	Retaining Ring, 2 7/16"
11.	GD7803	1	Disc Blade, Fluted, 1", 8 Flutes (Shown)
	GD7804	-	Disc Blade, Bubbled, 1"
	GD9254	-	Disc Blade, Fluted, ¾", 13 Flutes
12.	GB0213	2	Spring Seat
13.	GD12817	2	Compression Spring
14.	GD12829	1	Sleeve
15.	G10046	1	Hex Head Cap Screw, ⅝"-11 x 5"
	G10107	1	Lock Nut, ⅝"-11
16.	GA9845	1	Coulter Arm W/Grease Fitting
	G10643	-	Grease Fitting, 45°, ¼"-28
17.	G10011	1	Hex Head Cap Screw, ⅝"-11 x 5 ½"
	G10107	1	Lock Nut, ⅝"-11
18.	GB0218	3	Bushing, 21/32" I.D. x ⅞" O.D. x 19/32" Long
19.	GD1132	2	Dust Cap
20.	G10010	2	Hex Head Cap Screw, ⅝"-11 x 3"
	G10503	2	Hex Jam Nut, ⅝"-11, Grade 2
21.	GD10552	2	Wheel, 12 Tine, ⅜" x 12"
22.	GA5654	2	Hub W/Bearings
	GA2014	-	Bearing
23.	GD9724	2	Backing Plate
24.	G10133	12	Hex Head Cap Screw, 5/16"-18 x 1 ½"
	G10109	12	Lock Nut, 5/16"-18, Grade 8
25.	G10213	2	Machine Bushing, ⅝" (.030" Thick)
26.	GA9862	2	Weed Guard W/Spring Pin
	G10765	-	Spring Pin, ¼" x 1"
27.	GA9865	1	Mount
28.	GA9861	1	Cam
29.	GD10519	1	Spring
30.	G10974	1	Lock Nut W/Nylon Insert, ½"-13
31.	G10005	1	Hex Head Cap Screw, ⅝"-11 x 1 ¾"
	G10107	4	Lock Nut, ⅝"-11
32.	GA9864	1	Support
33.	G10014	1	Hex Head Cap Screw, ½"-13 x 1"
	G10102	1	Hex Nut, ½"-13
34.	G10011	2	Hex Head Cap Screw, ⅝"-11 x 5 ½"
	G10205	2	Washer, ⅝" SAE
	G10730	2	Lock Nut W/Nylon Insert, ⅝"-11
35.	GD14170	2	Sleeve, 3"
36.	GB0386	2	Wheel, 12 Tine, ⅜" x 12"
A.	GA7446	-	Wheel Assembly, 12 Tine, R.H. (Items 21-24) (Shown)
	GA7445	-	Wheel Assembly, 12 Tine, L.H. (Items 21-24)
B.	GA12236	-	Wheel Assembly, 12 Tine, R.H. (Items 22, 23, 24 And 36) (Shown)
	GA12235	-	Wheel Assembly, 12 Tine, L.H. (Items 22, 23, 24 And 36)

INTERPLANT® PUSH ROW UNIT

(RU156c/RU141h)

NOTE: Push row units use the same seed tube, row unit depth adjustment components, quick adjustable down force springs, 15" opener disc blades, gauge wheels, closing wheels, meter drive and seed hopper as the pull row unit. See those pages for common parts.

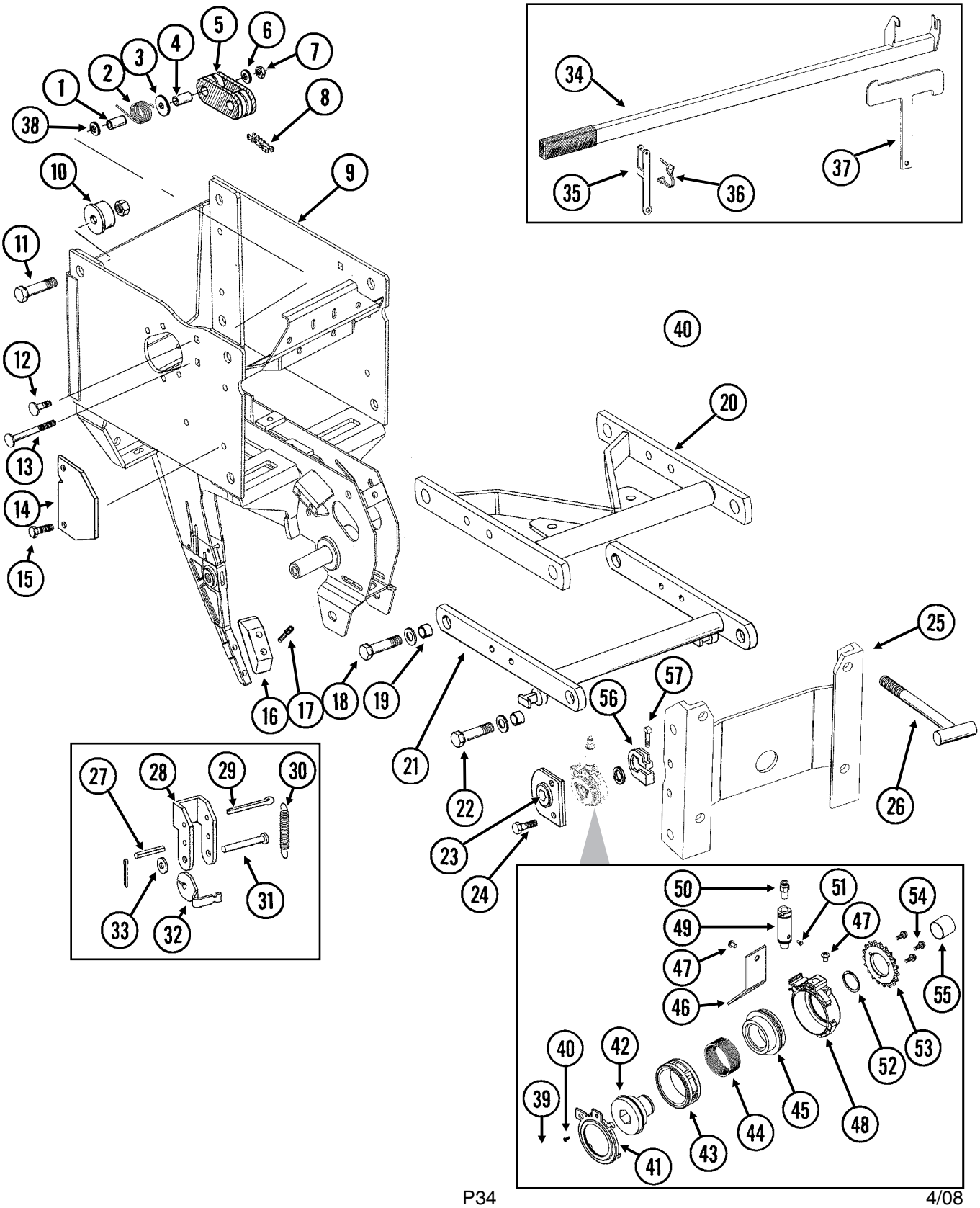

INTERPLANT® PUSH ROW UNIT

ITEM	PART NO.	QTY. (Per Row)	DESCRIPTION
1.	GD1026	1	Sleeve, 1 3⁄16" Long
2.	GD11218	1	Spring
3.	G10201	1	Special Washer, 3⁄8" x 1 1⁄2" O.D.
4.	GD8893-01	1	Sleeve, 1 3⁄8" Long
5.	GD11962	1	Idler
6.	G10210	1	Washer, 3⁄8" USS
7.	G10108	1	Lock Nut, 3⁄8"-16
8.	G3303-96	1	Chain, No. 41, 96 Pitch Including Connector Link
	GR0196	1	Connector Link, No. 41
9.	GA10161	-	Push Row Unit Shank
10.	GB0314	2	Hopper Mount
11.	G10751	2	Hex Head Cap Screw, 5⁄8"-18 x 1 3⁄4"
	G10412	2	Lock Nut, 5⁄8"-18
12.	G10599	1	Carriage Bolt, 3⁄8"-16 x 1 1⁄4"
	G10101	1	Hex Nut, 3⁄8"-16
	G10108	1	Lock Nut, 3⁄8"-16
13.	G10307	1	Carriage Bolt, 3⁄8"-16 x 3 1⁄2"
14.	GD10867	2	Stop
15.	G10004	4	Hex Head Cap Screw, 3⁄8"-16 x 1 1⁄4"
	G10108	4	Lock Nut, 3⁄8"-16
16.	GB0301	1	Seed Tube Guard/Inner Scraper
17.	G10912	2	Hex Socket Head Cap Screw, 5⁄16"-18 x 1", Grade 8
18.	G10751	4	Hex Head Cap Screw, 5⁄8"-18 x 1 3⁄4"
	GD7805	4	Special Washer, 5⁄8", Hardened
	G10412	4	Lock Nut, 5⁄8"-18
19.	GB0218	8	Bushing, 21⁄32" I.D. x 7⁄8" O.D. x 19⁄32" Long
20.	GA11969	1	Upper Arm
21.	GA5787	1	Lower Arm
22.	G10732	4	Hex Head Cap Screw, 5⁄8"-18 x 2"
	GD7805	4	Special Washer, 5⁄8", Hardened
	G10412	4	Lock Nut, 5⁄8"-18
23.	GA2180	-	Hanger Bearing, 7⁄8" Hex Bore
24.	G10004	2	Hex Head Cap Screw, 3⁄8"-16 x 1 1⁄4"
	G10229	2	Lock Washer, 3⁄8"
	G10101	2	Hex Nut, 3⁄8"-16
25.	GA11971	1	Mounting Plate
26.	GA9105	-	T-Bolt, 5⁄8"-11 x 6"
	G10230	-	Lock Washer, 5⁄8"
	G10104	-	Hex Nut, 5⁄8"-11
27.	G10718	2	Spring Pin, 5⁄16" x 1 1⁄8"
28.	GD11264	2	Lockup
29.	G10463	2	Cotter Pin, 1⁄4" x 1 1⁄2"
30.	GD11447	2	Spring
31.	G10284	2	Clevis Pin, 1⁄2" x 1 1⁄2"
	G10456	2	Cotter Pin, 1⁄8" x 3⁄4"
32.	GD11263	2	Spring Tab
33.	G10216	2	Washer, 1⁄2" USS
34.	GA8651	1	Lift Lever W/Boot
	GD11649	-	Boot
35.	GD18073	1	Bracket (Lift Lever)
36.	GD9695	1	Wire Lock Pin, 1⁄4" x 1 3⁄4"
37.	GD18074	1	Mount
38.	G10203	1	Washer, 3⁄8" SAE
39.	GR1900	1	Lock Collar
40.	G11243	1	Slotted Flat Head Machine Screw, No. 8-32 x 1⁄2", Stainless Steel
41.	GR1894	1	Air Housing Cover
42.	GR1830	1	Hex Bushing
43.	GR1818	1	Ratchet Gear
44.	GR1813	1	Clutch Spring
45.	GR1829	1	Sprocket Hub
46.	GR1899	1	Anti-Rotation
47.	G11296	2	Pan Head Machine Screw, 1⁄4"-20 x 3⁄4" x 3⁄4"
48.	GR1895	1	Air Clutch Housing
49.	GR1896	1	Air Cylinder
50.	GR1819	1	Push Connect, 1⁄8" NPT Male x 1⁄4"
51.	GR1898	1	Filter
52.	G11295	1	Retaining Ring
53.	GR1831	1	Sprocket, 19 Tooth
54.	G11239	3	Hex Head Cap Screw, 10-32 x 1⁄2"
55.	GD18891	1	Spacer, 1 1⁄4" O.D. x 1"
56.	GD11045	-	Lock Clamp
57.	G10130	-	Square Head Machine Bolt, 5⁄16"-18 x 1 3⁄4"
	G10923	-	Flange Nut, 5⁄16"-18, No Serration
A.	GA12630	-	Air Clutch Assembly, (Items 39-55)

OUTER HITCH/SAFETY CHAIN

PHA038/PHA025(TWL1f/WGN47a/B0292)

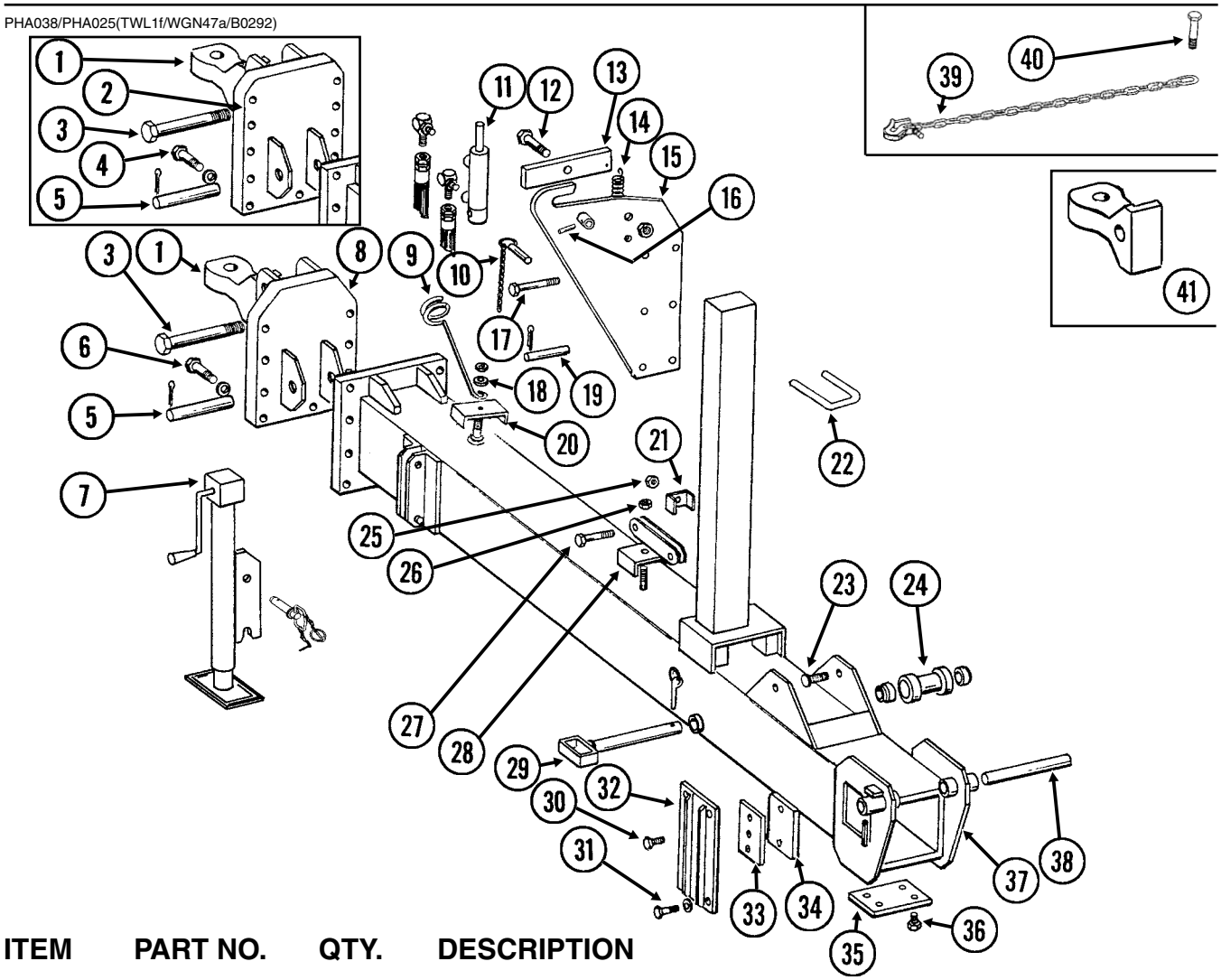

ITEM	PART NO.	QTY.	DESCRIPTION
1.	GB0237	1	Clevis, Single (1 ¾")
2.	GA9837	-	Hitch Mount, 16 Row
3.	G10169	1	Hex Head Cap Screw, 1 ¼"-7 x 6"
	G10157	1	Lock Nut, 1 ¼"-7
4.	G10802	11	Hex Head Cap Screw, ¾"-10 x 2 ¾"
	G10231	11	Lock Washer, ¾"
	G10105	11	Hex Nut, ¾"-10
5.	GD5173	1	Pin, 1 ¼" x 5 ⅛"
	G10462	2	Cotter Pin, 3⁄16" x 2"
6.	G10009	9	Hex Head Cap Screw, ⅝"-11 x 2 ½"
	G10230	9	Lock Washer, ⅝"
	G10104	9	Hex Nut, ⅝"-11
7.	GA4994	1	Jack Assembly Complete
	GA4995	-	Detent Pin Assembly
	GR0517	-	Pin
	GR0516	-	Crank Assembly
	GR0515	-	Bevel Gear Set, Includes: (2) Bevel Gears, (1) Gear Pin, (1) Groove Pin
8.	GA9836	1	Hitch Mount, 12 Row
9.	GD8260	1	Hose Holder
10.	GA7022	1	Detent Pin W/Chain (Transport Latch Locking Pin)
11.			See “Transport Latch Cylinder”, Page P64
12.	G10006	1	Hex Head Cap Screw, ⅝"-11 x 2 ¼"
	GB0218	1	Bushing, 21⁄32" I.D. x ⅞" O.D. x 19⁄32" Long
	GD7805	1	Special Washer, ⅝", Hardened
	G10107	1	Lock Nut, ⅝"-11
13.	GA7016	1	Catch Bar
14.	GD5857	1	Spring
15.	GA7433	1	Transport Latch
16.	G10765	-	Spring Pin, ¼" x 1"

OUTER HITCH/SAFETY CHAIN

ITEM	PART NO.	QTY.	DESCRIPTION
17.	G10062	1	Hex Head Cap Screw, ⅜"-16 x 3"
	GD2971-09	1	Sleeve, 2" Long
	G10108	1	Lock Nut, ⅜"-16
18.	G10216	1	Washer, ½" USS
	G10111	1	Lock Nut, ½"-13
19.	GD7137	1	Pin, ¾" x 3 ⅜"
	G10457	2	Cotter Pin, 5/32" x 1 ½"
20.	GD8188	-	Hose Clamp, ⅞" x 3" x 5 ⅜"
	GD8189	-	Rubber Pad
21.	GD5892	2	Hose Clamp, ⅝" x 1 ½" x 1 ½"
22.	GD9953	3	U-Bolt, 3" x 4" x ⅝"-11
	G10205	1	Washer, ⅝" SAE
	G10230	6	Lock Washer, ⅝"
	G10104	6	Hex Nut, ⅝"-11
23.			See “Hose Take-Up”, Pages P42 And P43
24.	GA4418	1	Roller W/Bronze Bushings, 12 Row
	GA4842	-	Roller W/Bronze Bushings, 16 Row
	GD6556	1	Bronze Bushing
25.	G10108	1	Lock Nut, ⅜"-16
26.	G10111	1	Lock Nut, ½"-13
27.	G10026	1	Hex Head Cap Screw, ¾"-10 x 2"
	G10112	1	Lock Nut, ¾"-10
28.	GA5842	1	Bracket, Jack Mount
	GD8189	-	Rubber Pad
29.	GA4402	1	Safety Pin, 12 ¾", 12 Row
	GA4845	-	Safety Pin, 14 ¾", 16 Row
	GD2558	-	Lynch Pin, ¼"
	GD2557	-	Lynch Pin, 7/16"
30.	G10014	4	Hex Head Cap Screw, ½"-13 x 1"
	G10228	4	Lock Washer, ½"
31.	G10017	8	Hex Head Cap Screw, ½"-13 x 1 ½", 12 Row
	G10016	10	Hex Head Cap Screw, ½"-13 x 2", 16 Row
	G10228	8-10	Lock Washer, ½"
	G10102	8-10	Hex Nut, ½"-13
32.	GA7029	2	Wear Mount, 12 Row
	GA7084	-	Wear Mount, L.H., 16 Row
	GA7085	-	Wear Mount, R.H., 16 Row
	GA7083	-	Wear Pad Retainer, 16 Row
33.	GD5154	-	Shim, 4" x 4" (As Required), All Sizes
	GD3501	-	Shim, 4" x 6" (As Required), 16 Row
34.	GD9959	-	Wear Pad, Nylatron, 4" x 4" (As Required), All Sizes
	GD9960	-	Wear Pad, Nylatron, 4" x 6" (As Required), 16 Row
35.	GD7519	3	Shim, 16 Gauge, 16 Row
	GD7518	1	Shim, ⅜", 16 Row
36.	G10014	4	Hex Head Cap Screw, ½"-13 x 1"
	G10228	4	Lock Washer, ½"
	G10216	4	Washer, ½" USS
37.	A7010	-	Outer Hitch, Y, 97", 12 Row 30" **(Non-Stock Item)**
	A7088	-	Outer Hitch, Y, 127 ½", 16 Row 30" **(Non-Stock Item)**
38.	GD5804	1	Pin, 1 ¼" x 12", 12 Row
	GD7251	1	Pin, 1 ¼" x 14", 16 Row
	G10610	2	Spring Pin, ⅜" x 2"
39.	GA7533	1	Safety Chain, ½"
	G1K412	-	Safety Chain Repair Kit, Includes Hook, Flat Washer, Latch Pin, Safety Latch, Spring And Retaining Ring
40.	G11058	1	Hex Head Cap Screw, 1 ¼"-7 x 3"
	GD10646	1	Special Washer
	G10226	1	Washer, 1 ¼" SAE
	G10157	1	Lock Nut, 1 ¼"-7
41.	GB0292	-	Hitch Clevis, Single (2" Hole)

2-POINT HITCH OPTION

(A12406)

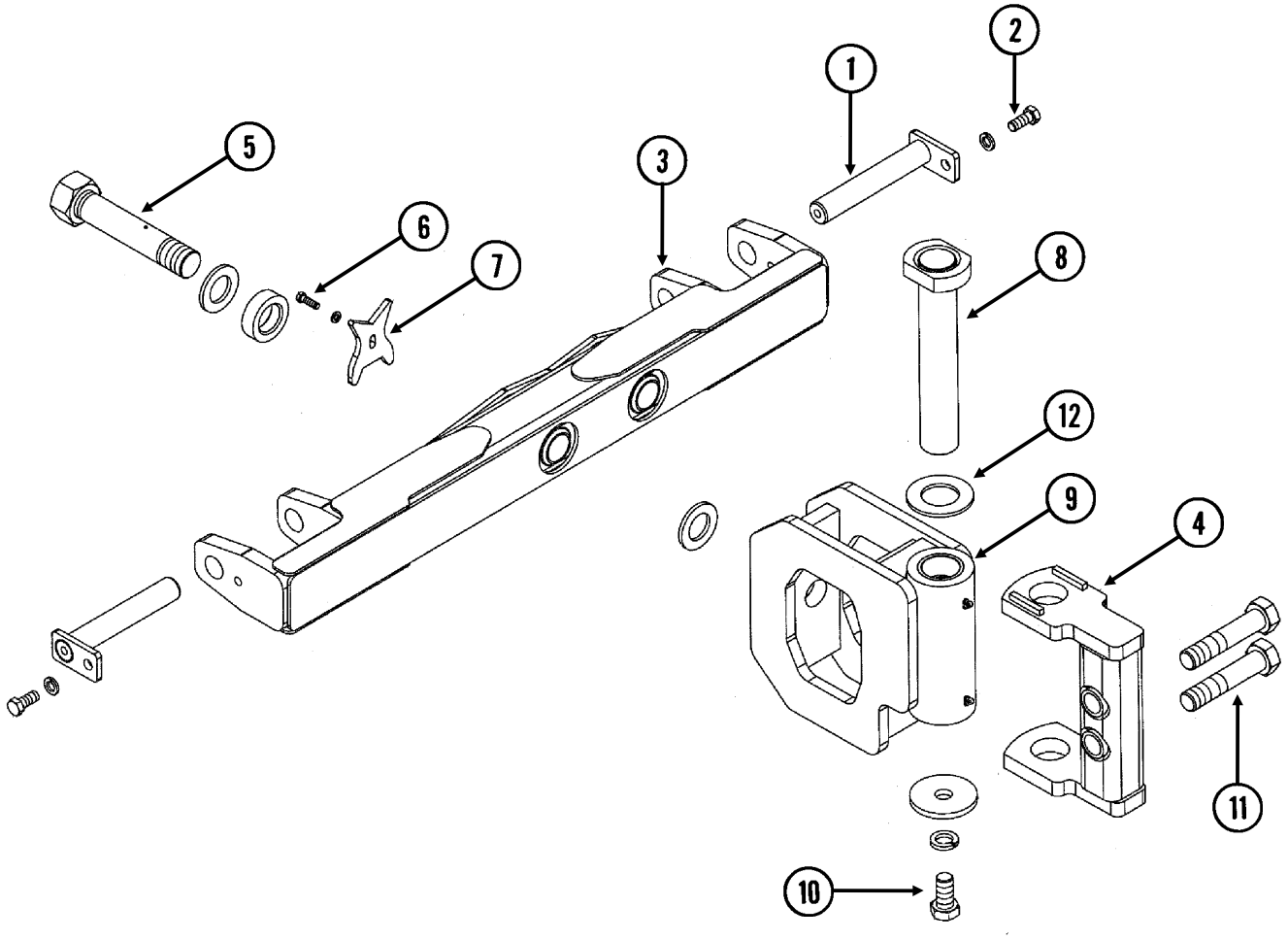

2-POINT HITCH OPTION

ITEM	PART NO.	QTY.	DESCRIPTION
1.	GA11079	2	Hammer Strap, Category 3N
2.	G10007	2	Hex Head Cap Screw, ⅝"-11 x 1 ½"
	G10230	2	Lock Washer, ⅝"
3.	GA12164	1	Hitch Bar
4.	GA12165	1	Pivot Mount
5.	GA11082	1	Pivot Bolt W/Grease Fitting, 1 ¾" x 10 ⅜" (Total Length)
	G10640	-	Grease Fitting, ¼"-28
	GD16303	2	Washer, 3" O.D. x 1 25⁄32" x ¼" Thick
	GD16226	1	Sleeve, 3" O.D. x 1 25⁄32" x 29⁄32 Thick
6.	G10005	1	Hex Head Cap Screw, ⅝"-11 x 1 ¼"
	G10217	1	Washer, ⅝" USS
7.	GD15100	1	Pivot Lock
8.	GA12163	1	Pin, 13 ⅜"
9.	GA11083	1	Hitch Pivot W/Bushings And Grease Fittings
	GD14562	2	Hardened Bushing, 2 ¾" O.D. x 2 ¼" I.D. x 3”
	G10779	2	Grease Fitting, 90°, ¼"-28
10	G11223	1	Hex Head Cap Screw, 1"-8 x 2"
	G10118	1	Lock Washer, 1"
	GD17245	1	Washer, 4" O.D. x 1 1⁄32" I.D. x ⅜"
11.	G10169	2	Hex Head Cap Screw, 1 ¼"-7 x 6"
	G10157	2	Lock Nut, 1 ¼"-7
12.	GD15725	1	Washer, 4" O.D. x 2 ¼" I.D. x ¼"

INNER HITCH

PHA035/PHA037(TWL2i)

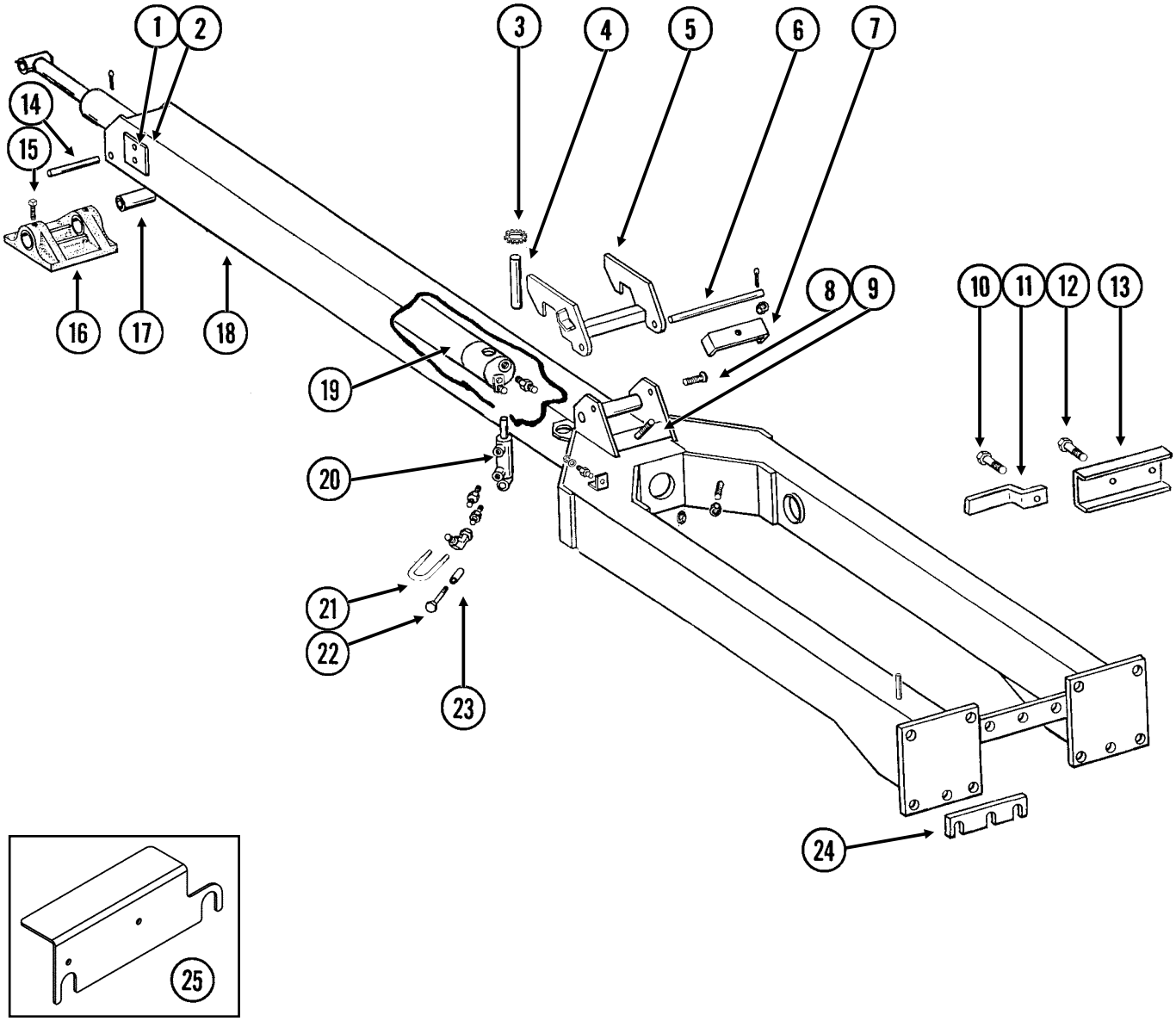

INNER HITCH

ITEM	PART NO.	QTY.	DESCRIPTION
1.	G10014	4	Hex Head Cap Screw, ½"-13 x 1", 8 Row 36"/38" And 12 Row
	G10017	4	Hex Head Cap Screw, ½"-13 x 1 ½", 16 Row
	G10228	4	Lock Washer, ½", 16 Row 30"
2.	GD9959	2	Wear Pad, Nylatron, 4" x 4"
	GD5154	4-6	Shim, 4" x 4"
3.	G10894	-	External Washer
4.	GD3537-17	1	Shaft, 1 ¼" x 6 ⅜", 12 Row
	GD3537-18	-	Shaft, 1 ¼" x 7 ⅜", 16 Row
5.	GA7423	1	Tongue Hook W/Grease Fittings, 12 Row
	GA7424	-	Tongue Hook W/Grease Fittings, 16 Row
	G10641	-	Grease Fitting, ⅛" NPT
6.	GD5804	1	Pin, 1 ¼" x 12", 12 Row
	GD7883	-	Pin, 1 ¼" x 14 ½", 16 Row
	G10468	2	Cotter Pin, ⅜" x 2"
7.	GD8188	-	Hose Clamp, ⅞" x 3" x 5 ⅜"
	GD8189	-	Rubber Pad
8.			See “Hose Take-Up”, Pages P42 And P43
9.	G11169	1	Hex Head Cap Screw, ½"-13 x 3 ½"
	G10111	1	Lock Nut, ½"-13
10.	G10004	1	Hex Head Cap Screw, ⅜"-16 x 1 ¼"
	G10229	1	Lock Washer, ⅜"
	G10101	1	Hex Nut, ⅜"-16
11.	GD10650	1	Hose Clamp
12.	G10003	1	Hex Head Cap Screw, ⅜"-16 x 1 ½"
	G10210	1	Washer, ⅜" USS
	G10108	1	Lock Nut, ⅜"-16
13.	GD10664	1	Shield (If Applicable)
14.	GD5173	1	Pin, 1 ¼" x 5 ⅛"
	G10462	1	Cotter Pin, 3⁄16" x 2"
15.	G10131	1	Square Head Set Screw, 5⁄16"-18 x ¾"
16.	GB0246	1	Shoe
17.	GD3537-11	1	Shaft, 1 ¼" x 7", 8/12 Row
	GD3537-12	-	Shaft, 1 ¼" x 8", 16 Row
18.	A7429	-	Inner Hitch, 169 ⅜", 12 Row 30" (Shown) **(Non-Stock Item)**
	A7426		Inner Hitch, 205 ⅜", 16 Row 30" **(Non-Stock Item)**
19.		-	See “Tongue Cylinder”, Pages P66-P68
20.		-	See “Tongue Lock Cylinder”, Page P66
21.	GD10530	1	U-Bolt, 2 ⅛" x 1 ⅞" x ⅜"-16
	G10229	2	Lock Washer, ⅜"
	G10101	2	Hex Nut, ⅜"-16
22.	G10585	1	Hex Head Cap Screw, ½"-13 x 3 ¼"
	G10216	1	Washer, ½" USS
	G10228	1	Lock Washer, ½"
	G10102	1	Hex Nut, ½"-13
23.	GD10538-01	1	Sleeve
24.	GD13543	1	Shim, 2 ½" x 10", 7 Gauge
	GD13544	1	Shim, 2 ½" x 10", 10 Gauge
	GD13545	1	Shim, 2 ½" x 10", 12 Gauge
	GD13546	1	Shim, 2 ½" x 10", 14 Gauge
25.	GD18116	1	Rotation Bracket

HOSE TAKE-UP

(TWL137e/TWL137d)

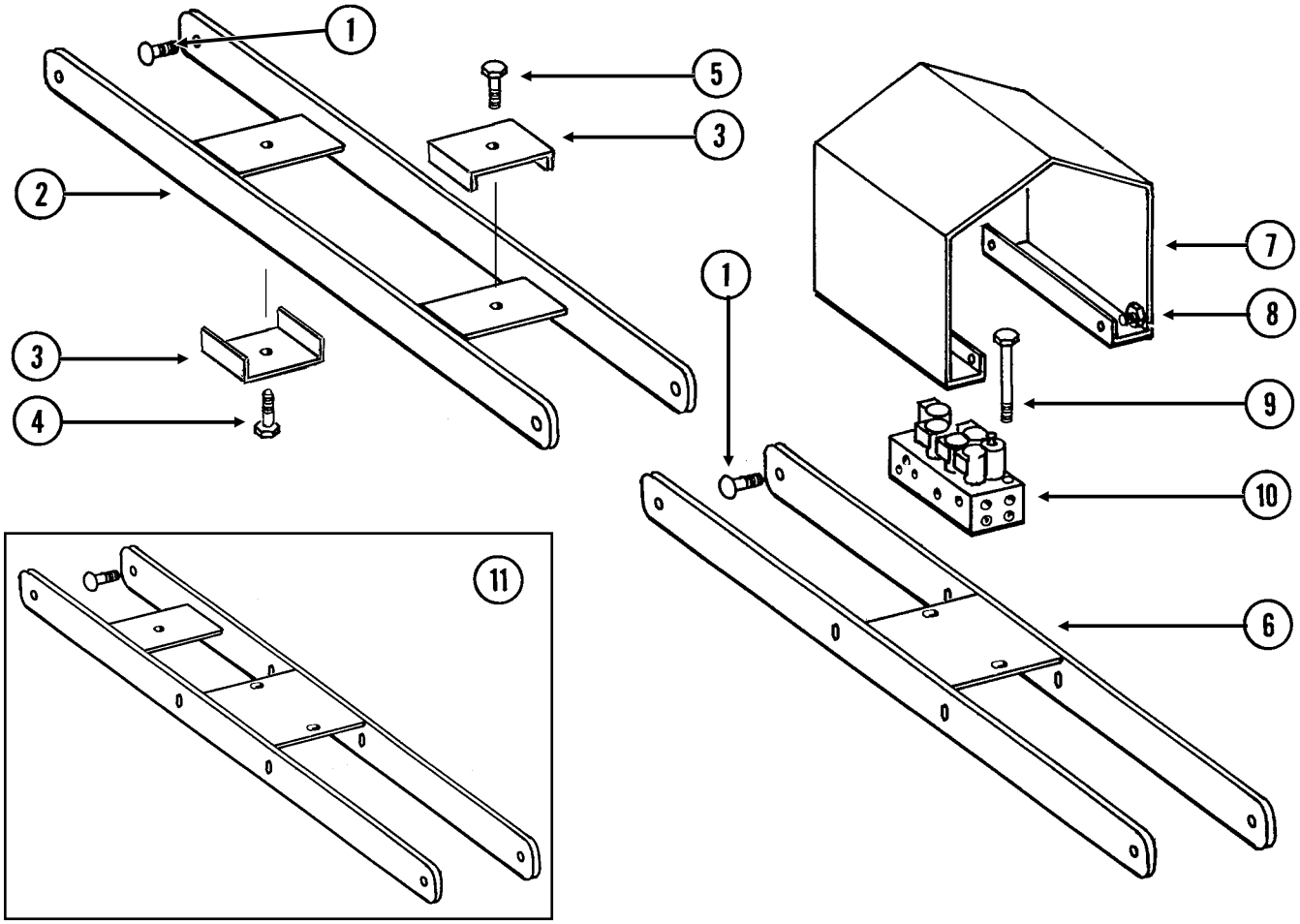

HOSE TAKE-UP

ITEM	PART NO.	QTY.	DESCRIPTION
1.	G10689	6	Carriage Bolt, ⅝"-11 x 2"
	GB0218	6	Bushing, 21⁄32" I.D. x ⅞" O.D. x 19⁄32" Long
	GD7805	6	Special Washer, ⅝", Hardened
	G10107	6	Lock Nut, ⅝"-11
2.	GA7013	-	Take-Up, 44 ¼", 12 Row
	GA7049	-	Take-Up, 56 ¼", 16 Row
3.	GD8188	2	Clamp, ⅞" x 3" x 5 ⅜"
	GD8189	2	Rubber Pad
4.	G10581	1-2	Hex Head Cap Screw, ½"-13 x 2 ¼"
	G10053	-	Hex Head Cap Screw, ½"-13 x 2 ½"
	G10111	1	Lock Nut, ½"-13
5.	G10581	1	Hex Head Cap Screw, ½"-13 x 2 ¼"
	G10111	1	Lock Nut, ½"-13
6.	GA7021	-	Take-Up, 44 ¼", 12 Row
7.	GD9952	1	Cover
8.	G10004	4	Hex Head Cap Screw, ⅜"-16 x 1 ¼"
	G10229	4	Lock Washer, ⅜"
	G10203	8	Washer, ⅜" SAE
	G10101	4	Hex Nut, ⅜"-16
9.	G10172	2	Hex Head Cap Screw, ⅜"-16 x 5"
	G10210	2	Washer, ⅜" USS
	G10108	2	Lock Nut, ⅜"-16
10.			See “Valve Block - Located On Hitch”, Pages P72 And P73
11.	GA7050	-	Take-Up, 56 ¼", 16 Row

CENTER FRAME

PFA070/VVB034(TWL138b)

12 ROW 30" SHOWN

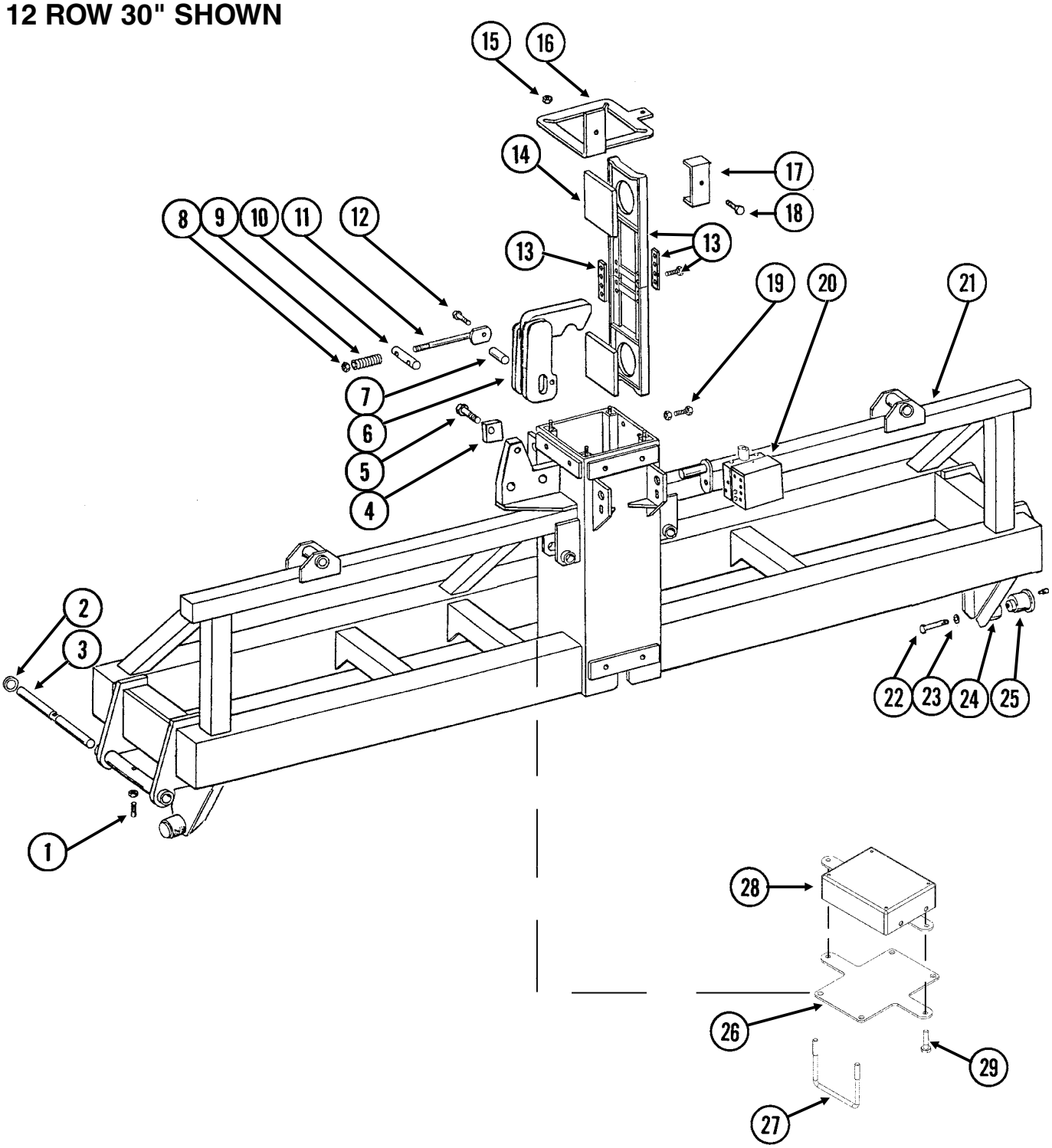

CENTER FRAME

ITEM	PART NO.	QTY.	DESCRIPTION
1.	G10102	1	Hex Nut, ½"-13
	G10828	1	Hex Socket Set Screw, ½"-13 x 1 ¼"
2.	G10404	-	Machine Bushing, 3 ⅛" x 2 ⅛" x 3⁄16" (As Required)
	G10234	-	Machine Bushing, 2 ⅛", 10 Gauge (As Required)
	G10336	-	Machine Bushing, 2 ⅛", 14 Gauge (As Required)
3.	GD10531	1	Hinge Pin, 2 ⅛" x 25 ¾"
4.	GD10492	2	Adjustment Block
5.	G10085	-	Hex Head Cap Screw, ¾"-10 x 3 ¾"
	G10218	-	Washer, ¾" USS
	G10112	-	Lock Nut, ¾"-10
6.	GA7390	-	Safety Hook
7.	GD9898	1	Pin, 1 ¼" x 2 15⁄16"
8.	G10205	2	Washer, ⅝" SAE
	G10107	2	Lock Nut, ⅝"-11
9.	GD10006	2	Spring
10.	GD9870	1	Pin, 1 ¼" x 6"
11.	GA6943	2	Spring Rod
12.	G10037	2	Hex Head Cap Screw, ½"-13 x 1 ¼"
	G10206	2	Washer, ½" SAE
	G10228	2	Lock Washer, ½"
	GD7904-02	2	Sleeve, ½" x ½" Long
13.	GA7579	4	Pad Holder W/Bars
	GD10706	-	Bar, 1 ¼" x 6" x ¼" Thick
	GD10707	-	Bar, 1 ¼" x 6" x ⅜" Thick
	G10001	-	Hex Head Cap Screw, ⅜"-16 x 1"
14.	GD10053	8	Wear Pad, 7" x 7", ½" Thick
15.	GD7805	4	Special Washer, ⅝", Hardened
	G10104	4	Hex Nut, ⅝"-11
16.	GD9968	1	Cap
17.	GD8188	1	Hose Clamp, ⅞" x 3" x 5 ⅜"
	GD8189	1	Rubber Pad
18.	G10053	1	Hex Head Cap Screw, ½"-13 x 2 ½"
	G10228	1	Lock Washer, ½"
	G10102	1	Hex Nut, ½"-13
19.	G10543	16	Hex Head Cap Screw, ¾"-10 x 3", Full Thread
	G10105	16	Hex Nut, ¾"-10
20.		-	See “Valve Blocks - Located On R.H. Rear Center Frame”, Page P71
21.	A7393	-	Frame W/Cam Follower Mounts, 136" **(Non-Stock Item)**
	GA6929	-	Cam Follower Mount, L.H.
	GA6928	-	Cam Follower Mount, R.H.
22.	G10025	2	Hex Head Cap Screw, ¾"-10 x 1 ½"
23.	GB0409	2	Spring Washer
24.	GD10532	2	Sleeve
25.	GA6497	2	Cam Follower W/Grease Fitting
	G10640	-	Grease Fitting, ¼"-28
26.	GD18344	1	Valve Box Mount
27.	GD18329	2	U-Bolt, 5⁄16"-18
	G10106	2	Hex Nut, 5⁄16"-18
	G10232	2	Lock Washer, 5⁄16"
28.			See “Valve Box Module”, Pages P82 and P83
29.	G10064	2	Hex Head Cap Screw, ¼"-20 x 1"
	G10227	2	Lock Washer, ¼"
	GD7363-01	2	Sleeve, ½" Long
	G10103	2	Hex Nut, ¼"-20

HYDRAULIC DRIVE

(VI55)

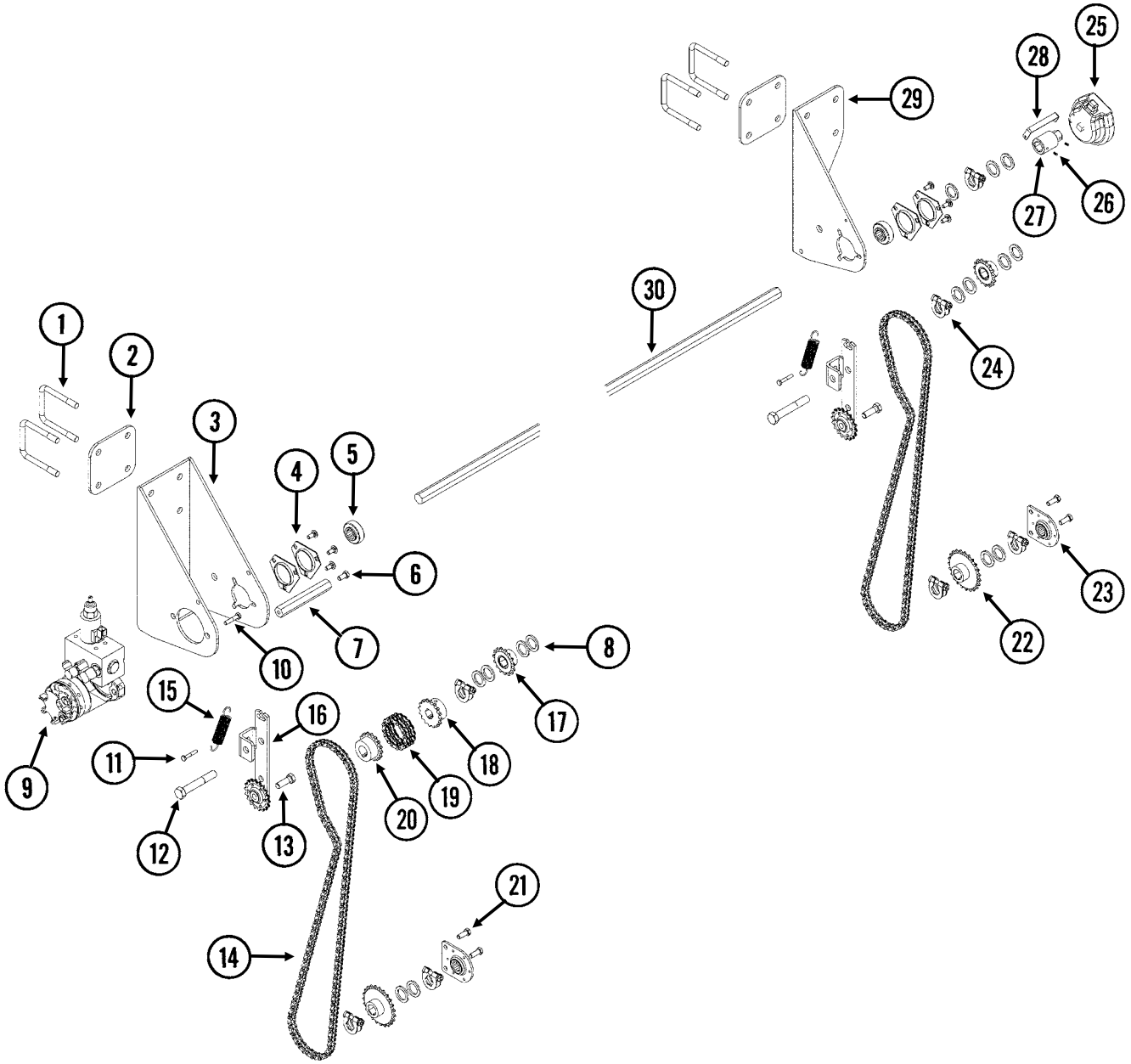

HYDRAULIC DRIVE

ITEM	PART NO.	QTY.	DESCRIPTION
1.	GD4743	4	U-Bolt, 3" x 3" x ½"-13
2.	GD18114	2	Spacer
3.	GA12569	1	Motor Bracket
4.	G3400-01	4	Flangette
5.	G2100-03	2	Bearing, ⅞" Hex Bore, Spherical
6.	G10002	1	Hex Head Cap Screw, ⅜"-16 x ¾"
7.	GD18326	1	Hex Spacer
8.	G10233	15	Machine Bushing, 1", 10 Gauge
9.			See “Valve Block - Located On L.H. Rear Center Frame”, Pages P74 And P75
10.	G10133	3	Hex Head Cap Screw, 5⁄16"-18 x 1 ½"
11	G10021	2	Hex Head Cap Screw, ¼"-20 x 1 ½"
12.	G10036	2	Hex Head Cap Screw, ⅝"-11 x 4"
13.	G10017	2	Hex Head Cap Screw, ½"-13 x 1 ½"
14.	G3310-84	2	Chain, No. 40, 84 Pitch Including Connector Link
	GR0912	-	Connector Link, No. 40
15.	GD5857	2	Spring
16.	GA9553	2	Idler W/Sprocket And Hardware
	GA7154	-	Sprocket W/Bearing, 19 Tooth
	G10017	-	Hex Head Cap Screw, ½"-13 x 1 ½"
	G10128	-	Machine Bushing, ½", 14 Gauge
	G10501	-	Hex Jam Nut, ½"-13, Grade 2
	GD13422	-	Idler Arm
17.	GA5105	2	Sprocket, 15 Tooth
18.	GD16490	2	Coupler, 1" I.D.
19.	G3317-16	1	Chain, Double No. 40, 16 Pitches
	GR1790	-	Connector Link, Double No. 40
20.	GD16489	1	Coupler, ⅞" Hex
21.	G10001	4	Hex Head Cap Screw, ⅜"-16 x 1"
22.	GA5108	2	Sprocket, 23 Tooth
23.	GA2180	2	Hanger Bearing, ⅞" Hex Bore
24.	GA11331	2	Hex Lock Clamp Assembly
25.	GA12565	1	Encoder Module
26.	G11242	1	Hex Socket Set Screw, ¼"-20 x ⅜"
27.	GA12661	7	Hex Adapter Encoder
28.	GD18115	1	Encoder Bracket
29.	GD18014	1	Carrier Bracket
30.	GD0914-54.75	1	Hex Shaft, ⅞" x 54 ¾" (No Holes)

WING FRAME

(TWL180a/TWL139i)

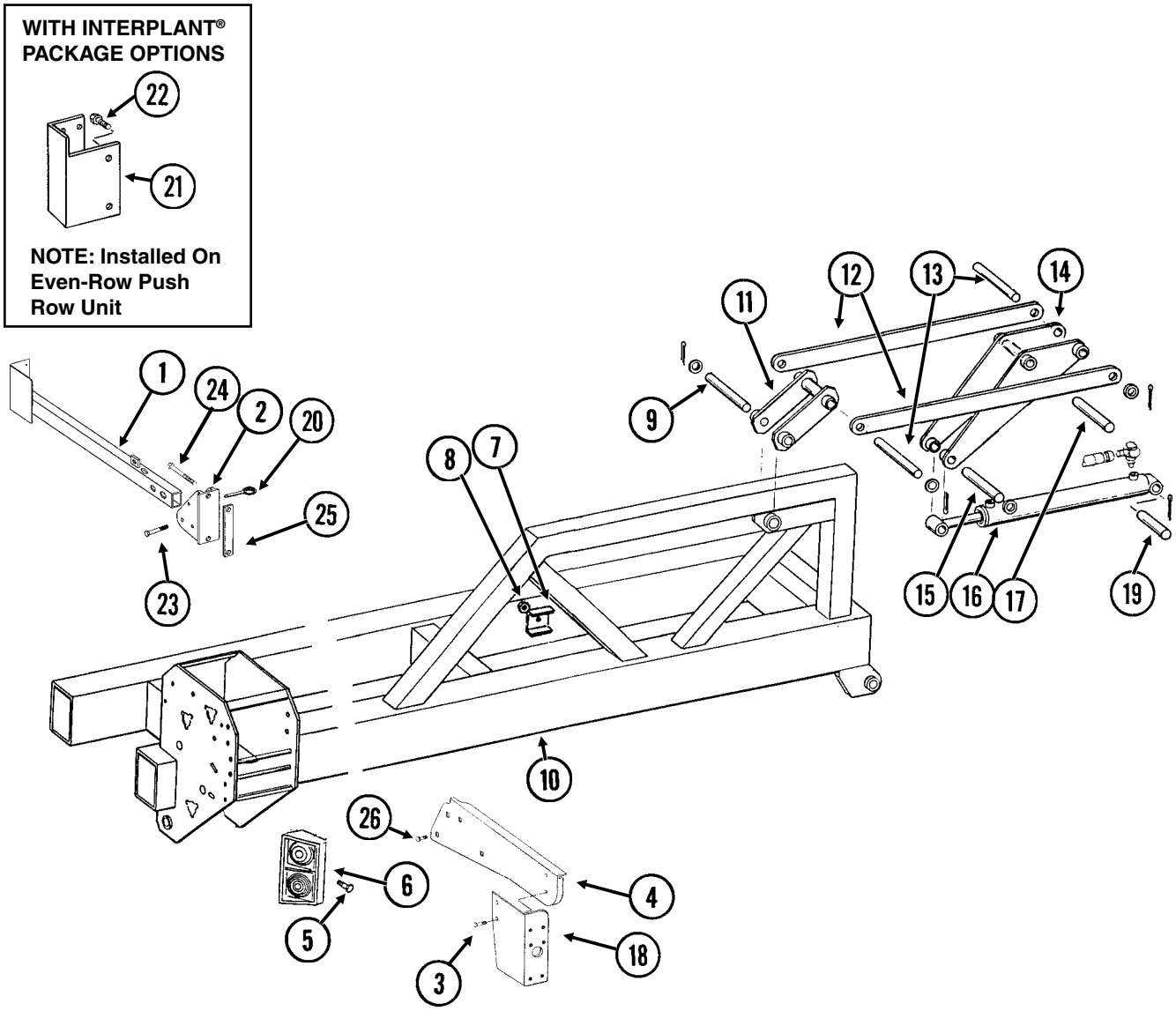

WING FRAME

ITEM	PART NO.	QTY.	DESCRIPTION
1.	GA9840	1	Light Bracket
2.	GB0309	1	Light Mount Bracket
3.	G10064	2	Hex Head Cap Screw, ¼"-20 x 1"
	G10227	2	Lock Washer, ¼"
	G10103	2	Hex Nut, ¼"-20
4.	GD15950	1	Light Mount Extension
5.	G10064	8	Hex Head Cap Screw, ¼"-20 x 1"
	G10110	8	Lock Nut, ¼"-20, Grade B
6.		-	See “Electrical Components”, Pages P84 And P85
7.	GD5875	-	Hose Clamp, 9⁄16" x 2 ½" x 2"
8.	G10108	-	Lock Nut, ⅜"-16
9.	GD9963	1	Pin, 1 ¼" x 9"
	G10460	2	Cotter Pin, ¼" x 2"
10.	A6904	-	Wing, R.H., 119 ¼", 12 Row **(Non-Stock Item)**
	A6905	-	Wing, L.H., 119 ¼", 12 Row **(Non-Stock Item)**
	A6892	-	Wing, R.H., 179 ¼", 16 Row (Two Wheel Towers Per Wing) **(Non-Stock Item)**
	A6893	-	Wing, L.H., 179 ¼", 16 Row (Two Wheel Towers Per Wing) **(Non-Stock Item)**
11.	GA7018	1	Link
12.	GD9956	2	Strap, 41"
13.	GD9964	2	Pin, 1 ¼" x 10 ½"
	G10159	4	Machine Bushing, 1 ¼", 10 Gauge
	G10460	4	Cotter Pin, ¼" x 2"
14.	GA7019	1	Toggle Link
15.	GD4108	1	Pin, 1 ¼" x 7"
	G10159	2	Machine Bushing, 1 ¼", 10 Gauge
	G10460	2	Cotter Pin, ¼" x 2"
16.		-	See “Wing Lock Cylinder”, Page P69
17.	GD9955	1	Pin 1 ¼" x 7"
	G10606	2	Spring Pin, ¼" x 2"
18.	GD12724	1	Bracket
19.	GD6136	2	Pin, 1 ¼" x 5"
	G10460	4	Cotter Pin, ¼" x 2"
20.	G10874	1	Detent Pin, ½" x 3 ½" Grip
21.	GD12703	1	Push Row Unit Light Bracket
22.	G10001	2	Hex Head Cap Screw, ⅜"-16 x 1"
	G10229	2	Lock Washer, ⅜"
	G10101	2	Hex Nut, ⅜"-16
23.	G10033	1	Hex Head Cap Screw, ½"-13 x 3 ½"
	G10206	4	Washer, ½" SAE
	G10111	1	Lock Nut, ½"-13
24.	G10439	2	Hex Head Cap Screw, ⅝"-11 x 7"
	G10230	2	Lock Washer, ⅝"
	G10104	2	Hex Nut, ⅝"-11
25.	GD1908	1	Mounting Bracket
26.	G10312	2	Carriage Bolt, 5⁄16"-18 x ¾"
	G10620	2	Serrated Flange Nut, 5⁄16"-18
A.	G7698X	-	Push Row Unit Mounted Light Bracket Package (Items 21 And 22 On This Page And 42" Harness Extension, Item 5 On Pages P84 And P85)

CENTER PIVOT

PFA067/PFA068(TWL7c)

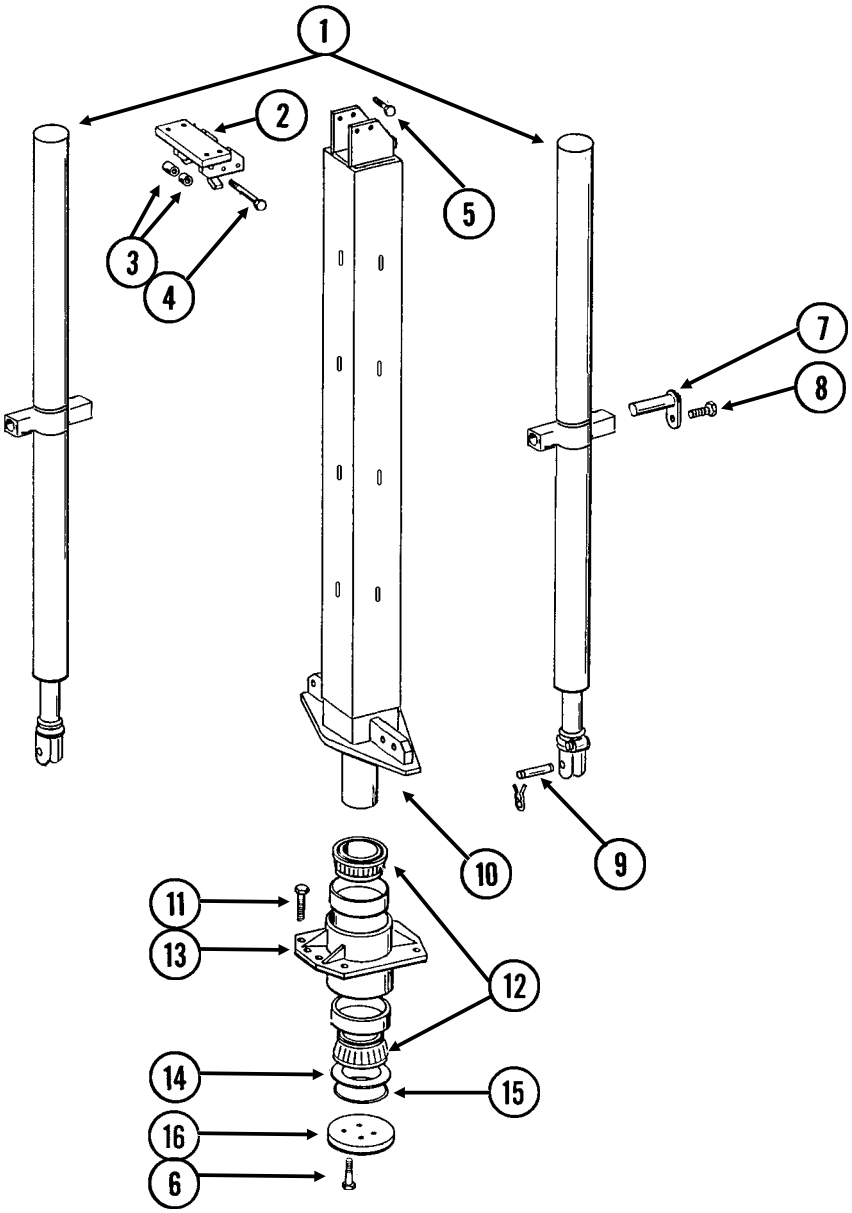

CENTER PIVOT

ITEM	PART NO.	QTY.	DESCRIPTION
1.		-	See “Center Lift Cylinder”, Page P64
2.	GA6964	1	Hook Strap
3.	GD10447	1	Sleeve, 3 ⅝"
	GD10446	1	Sleeve, 3 13⁄16"
4.	G10011	1	Hex Head Cap Screw, ⅝"-11 x 5 ½"
	G10107	1	Lock Nut, ⅝"-11
5.	G10689	4	Carriage Bolt, ⅝"-11 x 2"
	G10107	4	Lock Nut, ⅝"-11
6.	G10027	4	Hex Head Cap Screw, ¾"-10 x 2 ½"
	GD2169	1	Special Washer, 25⁄32" I.D. x 1 ¼" O.D., Hardened
7.	GA5121	4	Pin, 2 ⅛"
8.	G10017	4	Hex Head Cap Screw, ½"-13 x 1 ½"
	G10216	4	Washer, ½" USS
	G10228	4	Lock Washer, ½"
	G10102	4	Hex Nut, ½"-13
9.	GR0375	2	Pin, 1" x 3 ½"
	GR0193	4	Hair Pin Clip
10.	GA7540	1	Center Post
11.	G10441	8	Hex Head Cap Screw, ⅞"-9 x 3", Grade 8
	GD10063	8	Hardened Washer, ⅞"
	G11053	8	Hex Nut, ⅞"-9, Grade 8
12.	GA7096	2	Cone
13.	GA7067	1	Bearing Housing W/Cups, Less Grease Fitting
	GD10011	2	Cup
	G10779	1	Grease Fitting, 90°, ¼"-28
14.	GD10012	-	Shim, .005" Thick (As Required)
	GD10013	-	Shim, .020" Thick (As Required)
	GD10014	-	Shim, .007" Thick (As Required)
15.	GD9130	1	O-Ring
16.	GD9636	1	Bearing Cap

AXLE ASSEMBLY

HTA043/HTA044/PFA071/PHA033/PHA034/PFA073(TWL140cc)

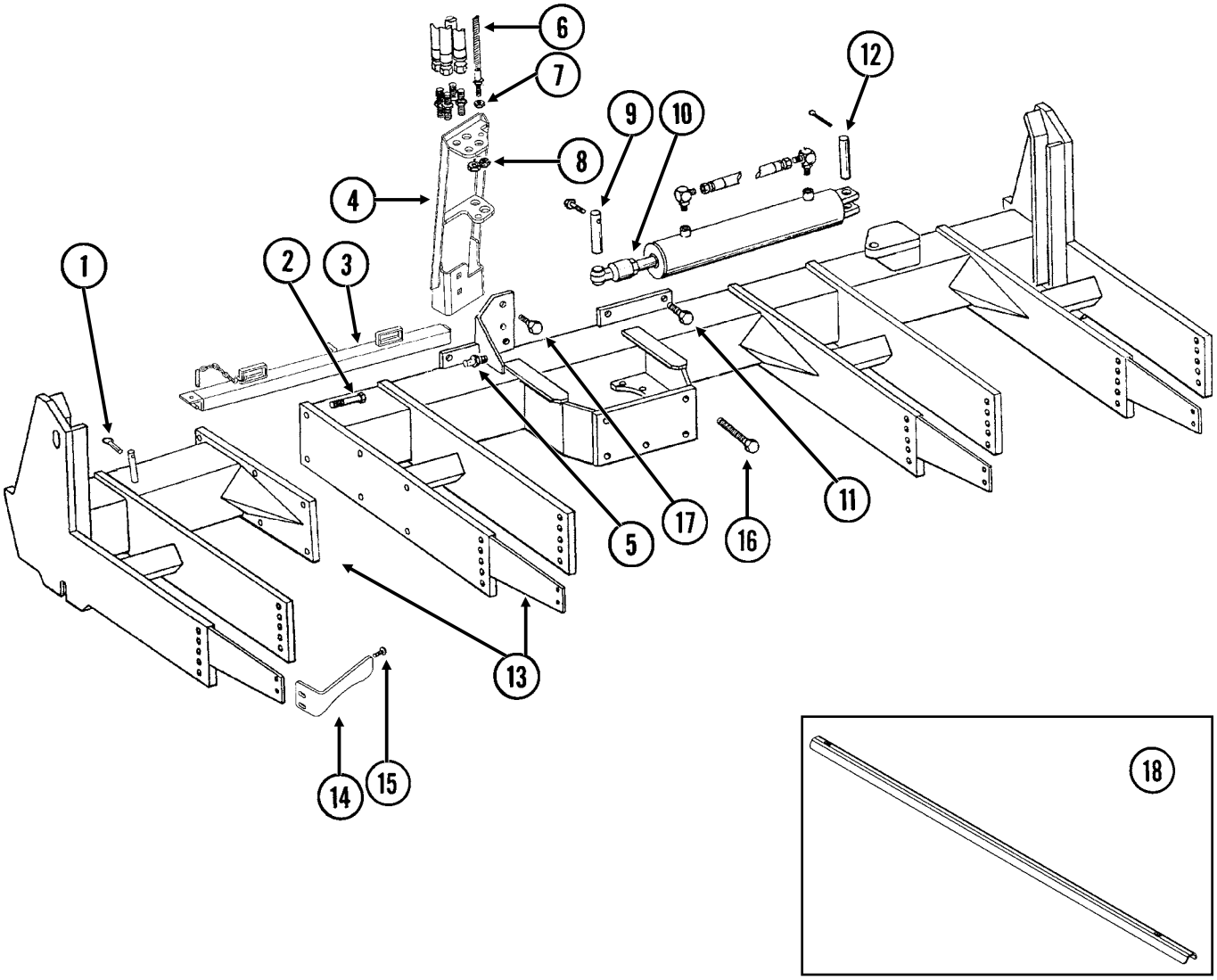

AXLE ASSEMBLY

ITEM	PART NO.	QTY.	DESCRIPTION
1.	GD2558	1	Lynch Pin, ¼"
2.	G10802	6	Hex Head Cap Screw, ¾"-10 x 2 ¾"
	G10028	-	Hex Head Cap Screw, ¾"-10 x 3"
	G10231	6	Lock Washer, ¾"
	G10105	6	Hex Nut, ¾"-10
3.	GA7098	1	Manual Safety Lockup W/Detent Pin
	GA7022	1	Detent Pin W/Chain
4.	GA11200	1	Bulkhead Mount
5.	GD8276	1	Pin
	G10237	1	Lock Washer, 7⁄16"
	G10100	1	Hex Nut, 7⁄16"-14
6.	GA6608	-	Cable Assembly
7.	G10228	2	Lock Washer, ½"
	G10102	2	Hex Nut, ½"-13
8.	G306-08	2	Lock Nut, ¾"-16
	G306-10	2	Lock Nut, ⅞"-14
9.	GD10092	1	Pin, 1 ¼" x 5 1/4"
	G10226	4	Washer, 1 ¼" SAE
	G10049	1	Hex Head Cap Screw, ⅜"-16 x 2 ½"
	G10108	1	Lock Nut, ⅜"-16
10.		-	See “Rotation Cylinder”, Page P64
11.	G10437	4	Hex Head Cap Screw, ¾"-8 x 2 ½", Grade 8
	GD2169	4	Special Washer, 25⁄32" I.D. x 1 ¼" O.D., Hardened
	G10436	4	Hex Nut, ¾"-10
12.	GD10064	1	Pin, 1 ¼" x 5 ¼", All Sizes
	G10460	2	Cotter Pin, ¼" x 2"
13.	GA8062	-	Axle W/Stub Axle
	GA9883	-	Stub Axle, Narrow Row
14.	GD12543	-	Scraper
15.	G10636	-	Carriage Bolt, ½"-13 x 1 ½"
	G10216	-	Washer, ½" USS
	G10228	-	Lock Washer, ½"
	G10102	-	Hex Nut, ½"-13
16.	G10808	6	Hex Head Cap Screw, 1"-8 x 10", Grade 8
	GD10231	6	Special Washer, 1 1⁄16" I.D. x 2" O.D.
	G10647	6	Hex Nut, 1"-8, Grade 8
17.	G10636	-	Carriage Bolt, ½"-13 x 1 ½"
	G10228	-	Lock Washer, ½"
	G10102	-	Hex Nut, ½"-13
18.	GD18645	1	Cable Guard

TRANSPORT WHEELS/ROCK GUARDS

HTA032/HTA040/HTA043/HTA004(TWL141c)

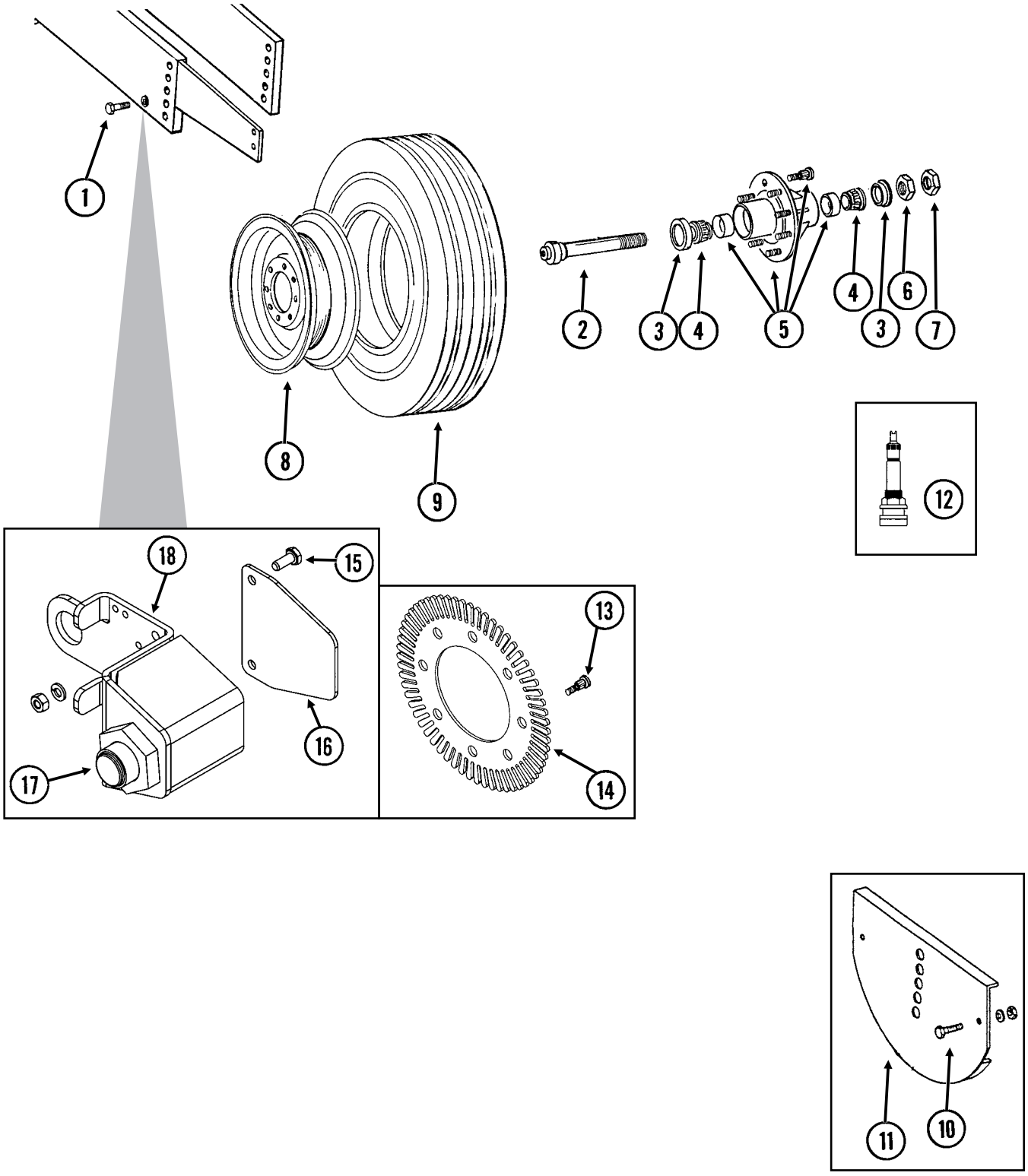

TRANSPORT WHEELS/ROCK GUARDS

ITEM	PART NO.	QTY. (Per Assy.)	DESCRIPTION
1.	G10448	2	Hex Head Cap Screw, ⅞"-9 x 2 ½", Grade 8
	G10330	2	Lock Washer, ⅞"
2.	GA4727	1	Spindle W/Retaining Ring, 1 ¾"
	G10913	-	External Retaining Ring, 2 ½"
3.	GA4722	2	Seal
4.	GA4723	2	Bearing
5.	GA4729	1	Hub W/Cups, Bolts, Nuts And Grease Fitting, 8 Bolt, 1 ¾" Bore
	G10640	-	Grease Fitting, ¼"-28
	GD7079	-	Cup
	GR0528	-	Lug Bolt, ⅝"-12 x 2 ¼", Grade 8
6.	GD7089	1	Special Nut, 1 ¾"-12 UNF
7.	GD7864	1	Special Hex Nut, 1 ¾"-12 UNF
8.	GA9544	-	Rim, 5.5" x 22.5", All Sizes
9.	GD13409	-	Tire, 255-70R 22.5" W/O Center Rib, Tubeless (Specify Brand*)
10.	G10037	-	Hex Head Cap Screw, ½"-13 x 1 ¼"
	G10228	-	Lock Washer, ½"
	G10102	-	Hex Nut, ½"-13
11.	GA5716	-	Rock Guard (Optional)
12.	GA7434	-	Valve Stem
13.	GD18676	4	Lug Bolt, ⅝"-18 x 2 ¾"
14.	GD18643	1	Jump Start Wheel
15.	G10020	2	Hex Head Cap Screw, ¼"-20 x ⅝"
	G10227	2	Lock Washer, ¼"
	G10103	2	Hex Nut, ¼"-20
16.	GD18646	1	Sensor Bracket Cover
17.	GA13204	1	Hall Effect Sensor
18.	GA13227	1	Sensor Bracket
A.	GA9545	-	Tire And Rim Assembly (Items 8, 9 And 12) (Specify Brand*)
B.	GA13214	-	Sensor Bracket Assembly (Items 15 - 18)

*** Specific brand requests will be supplied only as available from current KINZE® Repair Parts stock. If a specific brand requested is not in stock, the brand available will be supplied.**

WING WHEEL MODULE

(TWL110a)

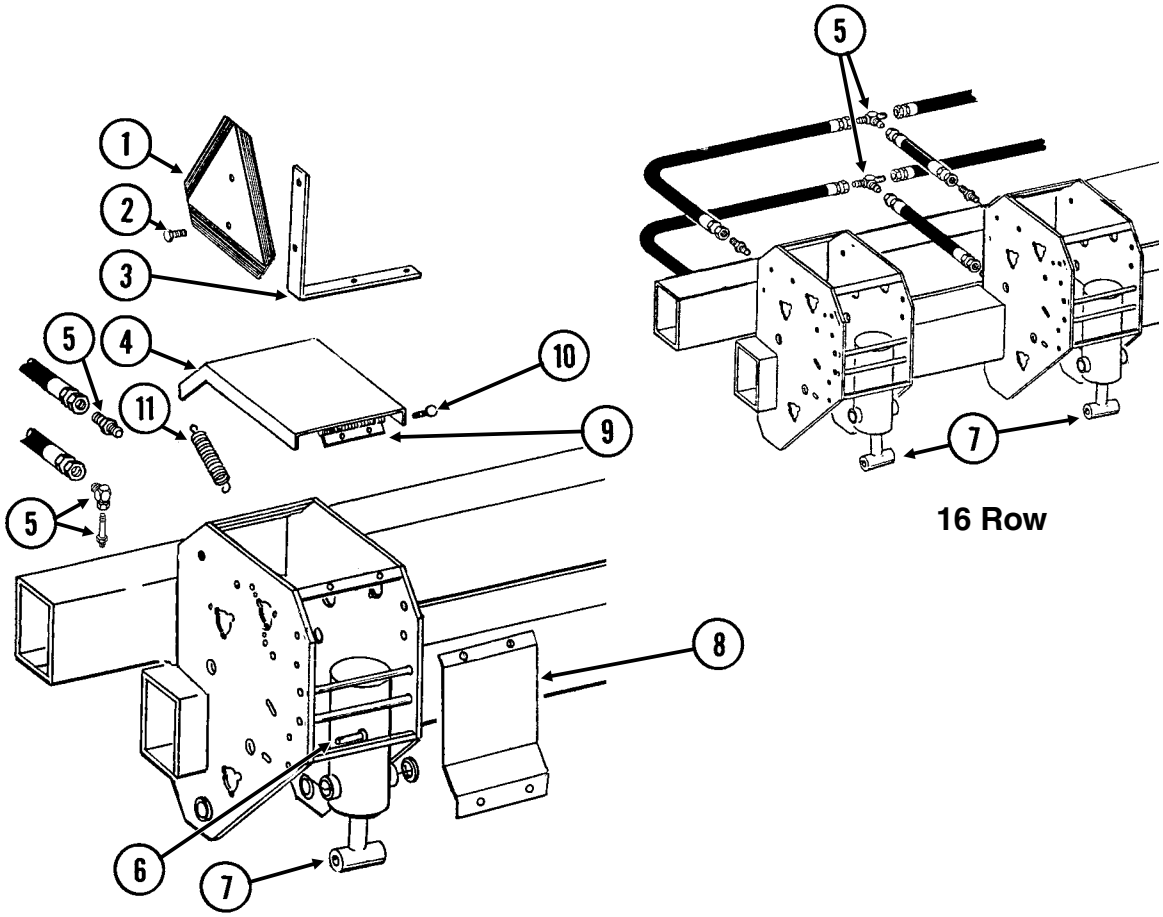

ITEM	PART NO.	QTY. (Per Assy.)	DESCRIPTION
1.	GD2199	1	SMV Sign
2.	G10022	2	Hex Head Cap Screw, ¼"-20 x ½"
	G10227	2	Lock Washer, ¼"
	G10103	2	Hex Nut, ¼"-20
3.	GD9969	1	Bracket
4.	GD10298	1	Cover
5.		-	See “Hydraulic Hoses And Fittings On Planter Frame”, Pages P80 And P81
6.	G10870	1	Clevis Pin, ⅜" x 1"
	G10860	1	Retaining Ring, ⅜"
7.		-	See “Wing Lift Cylinder”, Page P65
8.	GD6895	1	Shield
9.	GD5789	1	Hinge, Female
	GD5790	1	Hinge W/Pins, Male
10.	G10064	6	Hex Head Cap Screw, ¼"-20 x 1"
	G10209	4	Washer, ¼" USS
	G10227	6	Lock Washer, ¼"
	G10103	6	Hex Nut, ¼"-20
11.	GD5857	1	Spring

GROUND DRIVE WHEEL

PTD057(TWL142c)

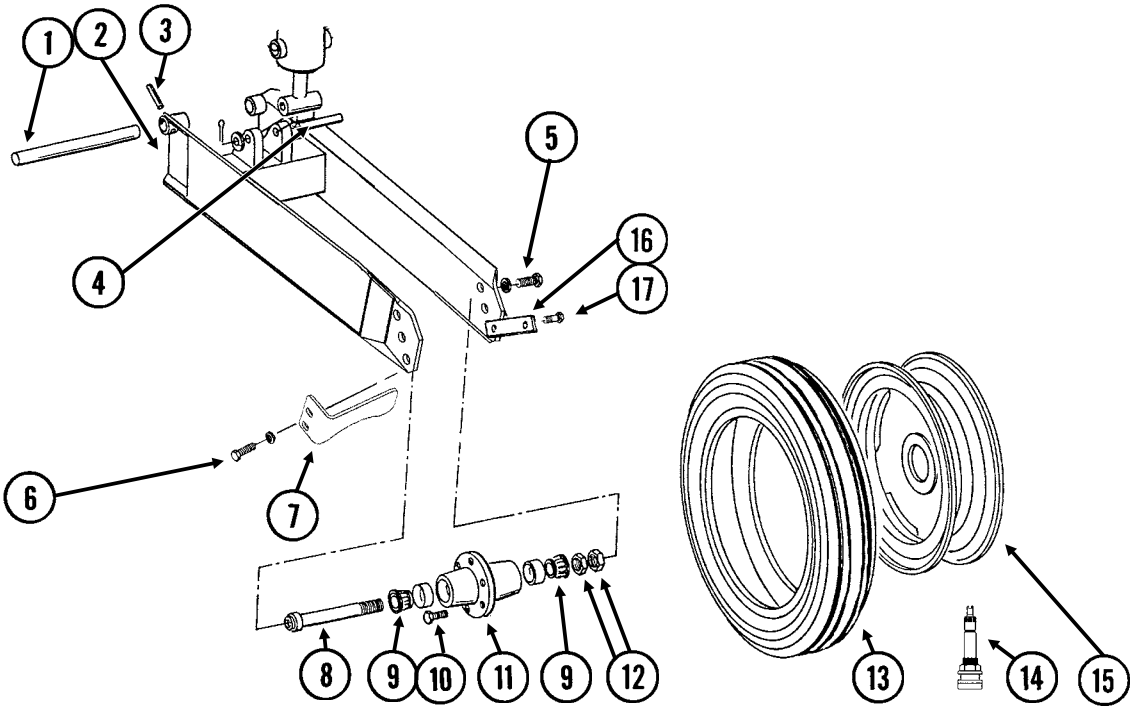

ITEM	PART NO.	QTY. (Per Assy.)	DESCRIPTION
1.	GD11695	-	Pin, 1 ¼" x 13 ¼"
2.	GA8677	1	Wheel Module
3.	G10610	-	Spring Pin, ⅜" x 2"
4.	GD5841	1	Pin, 1 ¼" x 5 ⅝"
	G10226	2	Washer, 1 ¼" SAE
	G10460	2	Cotter Pin, ¼" x 2"
5.	G10026	2	Hex Head Cap Screw, ¾"-10 x 2"
	G10231	2	Lock Washer, ¾"
6.	G10026	2	Hex Head Cap Screw, ¾"-10 x 2"
	G10231	2	Lock Washer, ¾"
	G10105	2	Hex Nut, ¾"-10
7.	GA13335	1	Scraper
8.	GA4376	1	Spindle W/Round External Retaining Ring, 10"
	GD11490	-	Round External Retaining Ring
9.	GA0895	2	Bearing
10.	GR0270	6	Lug Bolt, 9⁄16"-18
11.	GA2148	1	Hub W/Cups, 6 Bolt
	GR0434	-	Cup
12.	G11081	2	Hex Jam Nut, 1 ½"-12, Grade 2
13.	GD13401	1	Tire, 7.50" x 20", 8 Ply, Tubeless W/O Center Rib (Specify Brand*)
14.	GA7434	-	Valve Stem
15.	GA2908	1	Rim, 5.5" x 20"
16.	GD10144	1	Bar Clamp
17.	G10017	2	Hex Head Cap Screw, ½"-13 x 1 ½"
	G10228	2	Lock Washer, ½"
	G10102	2	Hex Nut, ½"-13
A.	GA7997	-	Tire And Rim Assembly (Specify Brand*)(Items 13-15)
B.	GA4377	-	Hub And Spindle Assembly (Items 8, 9, 11 And 12)

*** Specific brand requests will be supplied only as available from current KINZE® Repair Parts stock. If a specific brand requested is not in stock, the brand available will be supplied.**

ROW MARKER SPINDLE/HUB/BLADE

MKR020(MKR4)

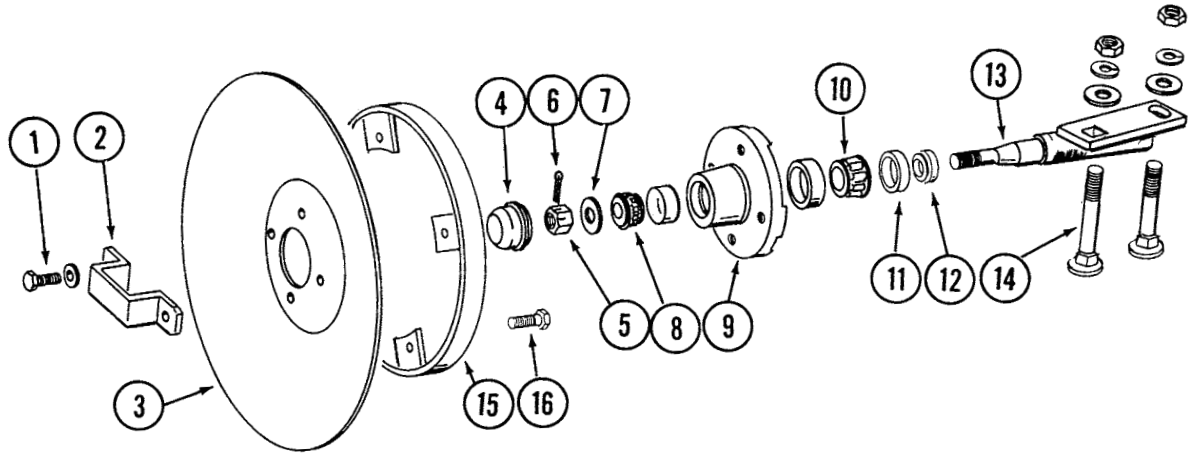

ROW MARKER SPINDLE/HUB/BLADE

ITEM	PART NO.	QTY. (Per Assy.)	DESCRIPTION
1.	G10722	4	Hex Head Cap Screw, ½"-20 x 1"
	G10228	4	Lock Washer, ½"
2.	GD2597	1	Retainer
3.	GD0746	1	Disc Blade, Solid, 16" (Shown)
	GD10283	-	Disc Blade, Notched, 16" (Optional)
4.	GD0840	1	Dust Cap
5.	G10725	1	Slotted Hex Nut, ⅝"-18
6.	G10544	1	Cotter Pin, 5⁄32" x 1"
7.	G10724	1	Washer, ⅝" SAE
8.	GA0257	1	Bearing
9.	GA0167	1	Hub W/Cups, 4 Bolt
	GR0151	-	Outer Cup
	GR0150	-	Inner Cup
10.	GA0245	1	Bearing
11.	GA0243	1	Grease Seal
12.	GA0899	1	Rubber Seal
13.	GA1676	1	Spindle, R.H.
	GA1677	-	Spindle, L.H. (Shown)
14.	G10844	2	Carriage Bolt, ½"-13 x 3 ½"
	G10168	2	Machine Bushing, ½", 7 Gauge
	G10228	2	Lock Washer, ½"
	G10102	2	Hex Nut, ½"-13
15.	GA5853	1	Depth Band
16.	G10019	4	Hex Head Cap Screw, 5⁄16"-18 x 1"
	G10109	4	Lock Nut, 5⁄16"-18, Grade 8
A.	GA1679	-	Hub And Spindle Assembly, L.H. (Items 1, 2 And 4-13)
	GA1678	-	Hub And Spindle Assembly, R.H. (Items 1, 2 And 4-13)

ROW MARKER ASSEMBLY, 12 ROW 30"

(MKR14j)

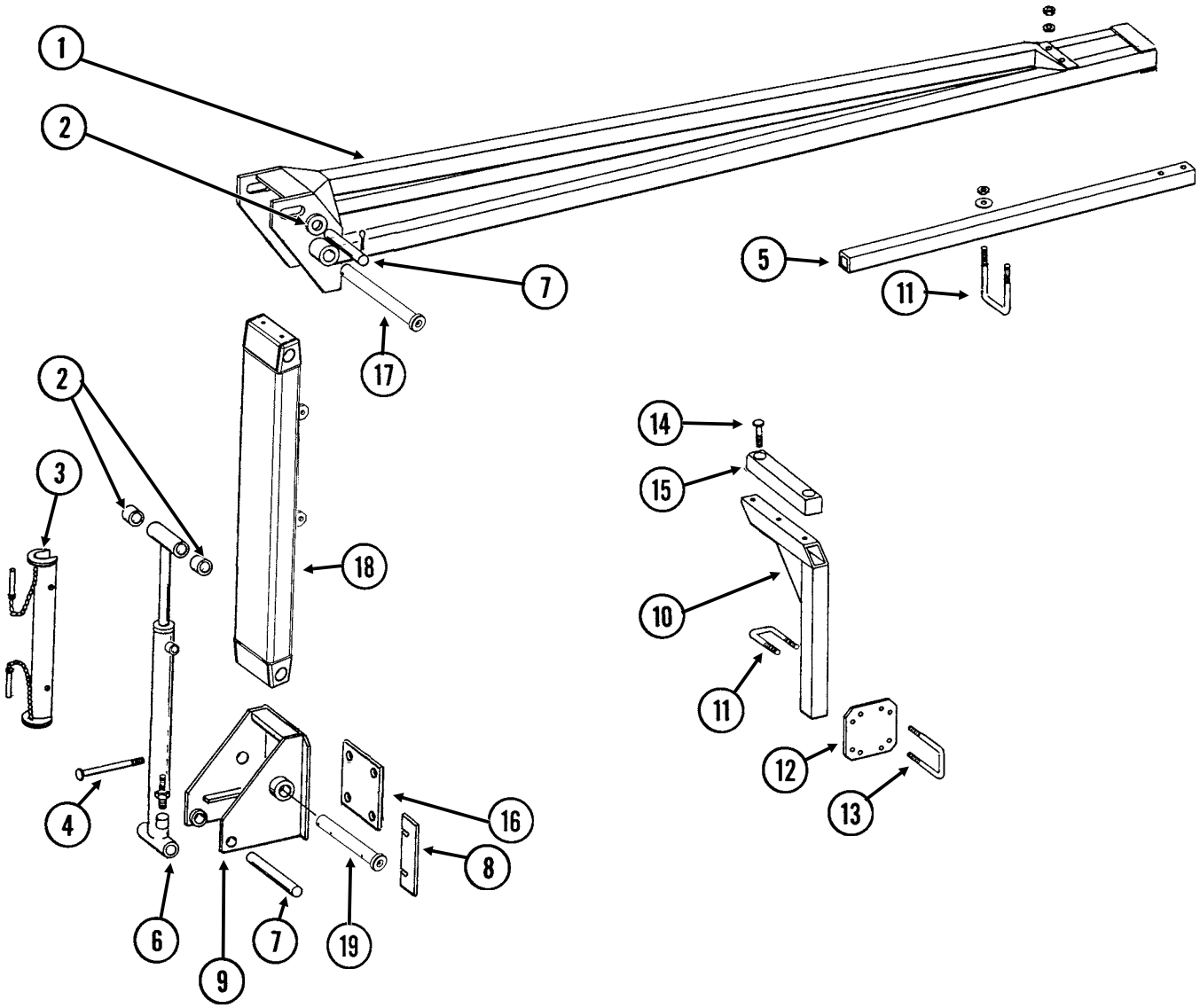

ROW MARKER ASSEMBLY, 12 ROW 30"

ITEM	PART NO.	QTY. (Per Assy.)	DESCRIPTION
1.	GA4353	1	Arm W/Grease Fittings, Second Stage, 110"
	G10641	-	Grease Fitting, ⅛" NPT
2.	GD0752-41	4	Sleeve, 1"
3.	GA8170	1	Safety Lockup W/Detent Pins, 19 ⅜"
	G10536	-	Detent Pin, ½" x 2 ½" Grip
4.	G10011	4	Hex Head Cap Screw, ⅝"-11 x 5 ½" (If Applicable)
	G10046	-	Hex Head Cap Screw, ⅝"-11 x 5" (If Applicable)
	G10008	-	Hex Head Cap Screw, ⅝"-11 x 2" (If Applicable)
	GD7805	8	Special Washer, ⅝", Hardened
	G10205	-	Washer, ⅝" SAE
	G10230	4	Lock Washer, ⅝"
	G10104	4	Hex Nut, ⅝"-11
5.	GD0453-07	1	Extension Tube, 45"
	GD0453-04	-	Extension Tube, 60", (L.H. Even-Row Marker) (If Applicable)
6.		-	See “Row Marker (Cushion) Cylinder”, Page P69
7.	GD2161	2	Pin, 1 ¼" x 8 ¼"
	G10460	4	Cotter Pin, ¼" x 2"
8.	GD10792	-	Shim, 2 ½" x 7 ¼", 16 Gauge (As Required)
9.	GA5130	1	Mount
10.	GA7042	1	Stand, 20"
11.	GD2721	3	U-Bolt, 2" x 2" x ½"-13
	G10228	6	Lock Washer, ½"
	G10102	6	Hex Nut, ½"-13
12.	GD9981	1	Bar
13.	GD4743	2	U-Bolt, 3" x 3" x ½"-13
	G10216	4	Washer, ½" USS
	G10228	4	Lock Washer, ½"
	G10102	4	Hex Nut, ½"-13
14.	G10017	2	Hex Head Cap Screw, ½"-13 x 1 ½"
	G10206	2	Washer, ½" SAE
	G10111	2	Lock Nut, ½"-13
15.	GA9088	-	Molded Stop, 12 ¼" Long
16.	GD13360	2	Plate, 6" x 6"
17.	GA11766	-	Pin W/Grease Fitting, 1 ¼" x 11 13⁄16"
	G10640	-	Grease Fitting, ¼"-28
	GD16999	-	Marker Pin
18.	GA11590	-	Arm, First Stage
19.	GA11767	-	Pin W/Grease Fitting, 1 ¼" x 9 ½"
	G10640	-	Grease Fitting, ¼"-28
	GD16999	-	Marker Pin

ROW MARKER ASSEMBLY, 16 ROW 30"

(MKR15k)

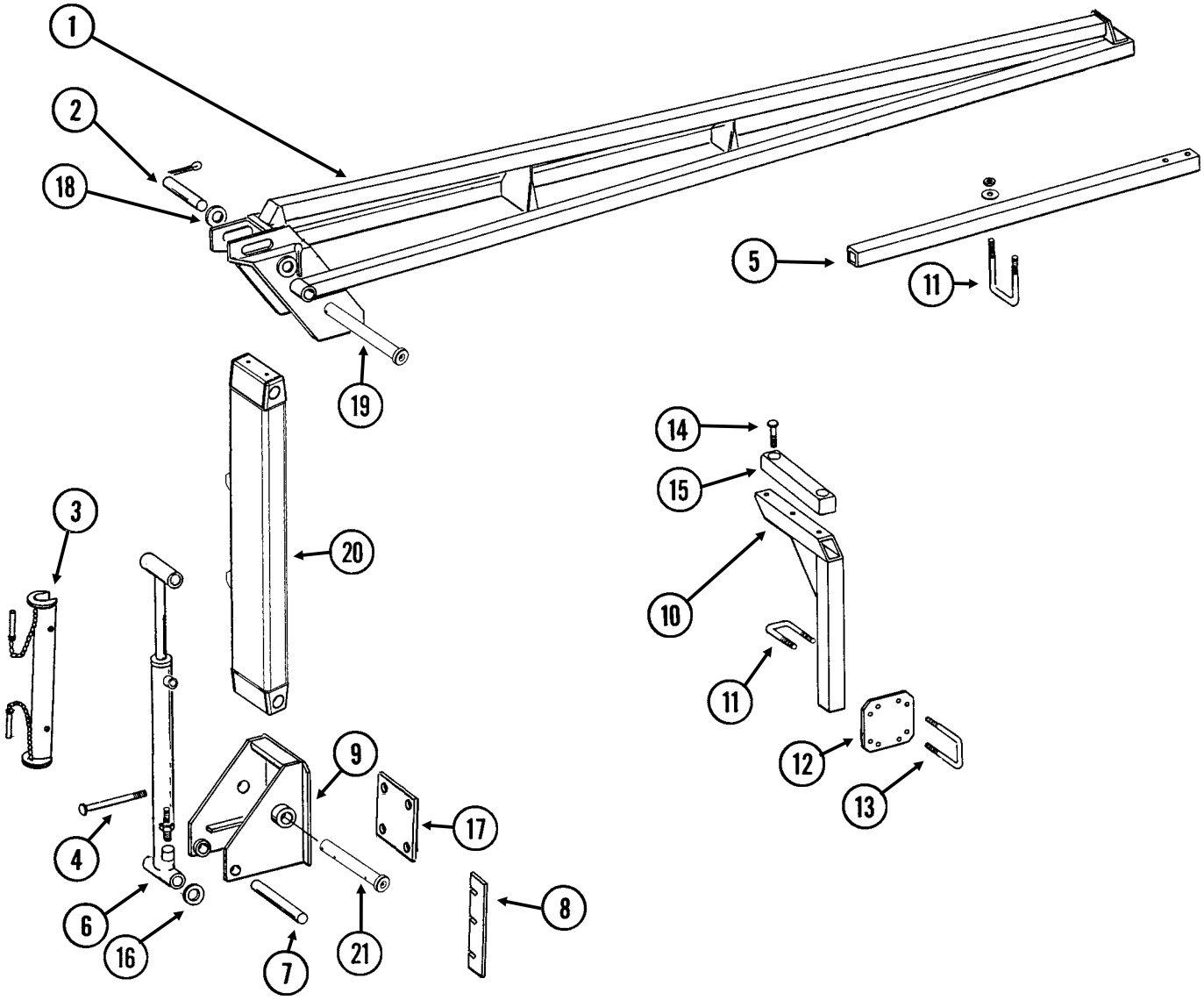

ROW MARKER ASSEMBLY, 16 ROW 30"

ITEM	PART NO.	QTY. (Per Assy.)	DESCRIPTION
1.	GA7118	-	Arm, Second Stage, 172 ¼", 16 Row
2.	GD1701	1	Pin, 1 ¼" x 6 ½"
	G10460	2	Cotter Pin, ¼" x 2"
3.	GA8170	1	Safety Lockup W/Detent Pins, 19 ⅜"
	G10536	-	Detent Pin, ½" x 2 ½" Grip
4.	G10012	-	Hex Head Cap Screw, ⅝"-11 x 6 ½" (If Applicable)
	G10009	-	Hex Head Cap Screw, ⅝"-11 x 2 ½" (If Applicable)
	GD7805	8	Special Washer, ⅝", Hardened
	G10230	6	Lock Washer, ⅝"
	G10104	6	Hex Nut, ⅝"-11
5.	GD0453-09	1	Extension Tube, 75, 16 Row (L.H. Even-Row Marker) (If Applicable)
	GD0453-03	-	Extension Tube, 50", 16 Row
6.		-	See “Row Marker (Cushion) Cylinder”, Page P69
7.	GD0652	1	Pin, 1 ¼" x 9 ½"
	G10460	2	Cotter Pin, ¼" x 2"
8.	GD10793	-	Shim, 2 ½" x 12 ½", 16 Gauge (As Required) (Shown)
	GD11791	-	Shim, 2 ½" x 8 ¼", 16 Gauge (As Required)
9.	GA4877	1	Mount
10.	GA7043	1	Stand, 30"
11.	GD2721	3	U-Bolt, 2" x 2" x ½"-13
	G10228	6	Lock Washer, ½"
	G10102	6	Hex Nut, ½"-13
12.	GD9981	1	Bar
13.	GD4743	2	U-Bolt, 3" x 3" x ½"-13
	G10216	4	Washer, ½" USS
	G10228	4	Lock Washer, ½"
	G10102	4	Hex Nut, ½"-13
14.	G10017	2	Hex Head Cap Screw, ½"-13 x 1 ½"
	G10206	2	Washer, ½" SAE
	G10111	2	Lock Nut, ½"-13
15.	GA9088	-	Molded Stop, 12 ¼" Long
16.	G10979	4	Special Washer, 1 ¼" (As Required)
17.	GD13359	2	Plate, 7" x 7"
18.	G10226	2	Washer, 1 ¼" SAE
	G10322	2	Machine Bushing, 1 ¼", 18 Gauge
19.	GA11768	-	Pin W/Grease Fitting, 1 ¼" x 13"
	G10640	-	Grease Fitting, ¼"-28
	GD17001	-	Marker Pin
20.	GA11569	-	Arm, First Stage, L.H. (Shown)
	GA11568	-	Arm, First Stage, R.H.
21.	GA11769	-	Pin W/Grease Fitting, 1 ¼" x 11 ½"
	G10640	-	Grease Fitting, ¼"-28
	GD17003	-	Marker Pin

ROTATION CYLINDER, ALL SIZES

(CYL11i)

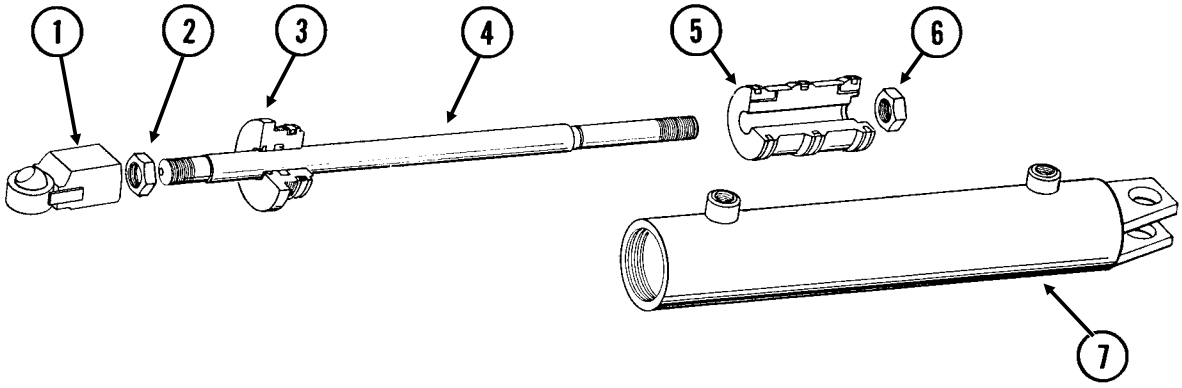

ITEM	PART NO.	QTY.	DESCRIPTION
1.	GA7221	1	Threaded Ball Joint End
2.	G10509	1	Hex Jam Nut, 1 ¼"-12, Grade 2
3.	GD11988	1	Gland
4.	GD11991	1	Rod
5.	GD11992	1	Piston
6.	G10972	1	Lock Nut, 1 ¼"-12
7.	A7220	1	Barrel **(Non-Stock Item)**
A.	GA8904	-	Cylinder Complete, 4" x 16" *(Part Number Stamped On Barrel)*
B.	GR1524	-	Seal Kit, Includes: (2) O-Rings, (1) U-Cup, (1) Wiper, (1) Seal, (2) Cast Iron Rings, (1) BU Ring, (1) Expander

CENTER LIFT CYLINDER, ALL SIZES

(CYL39c)

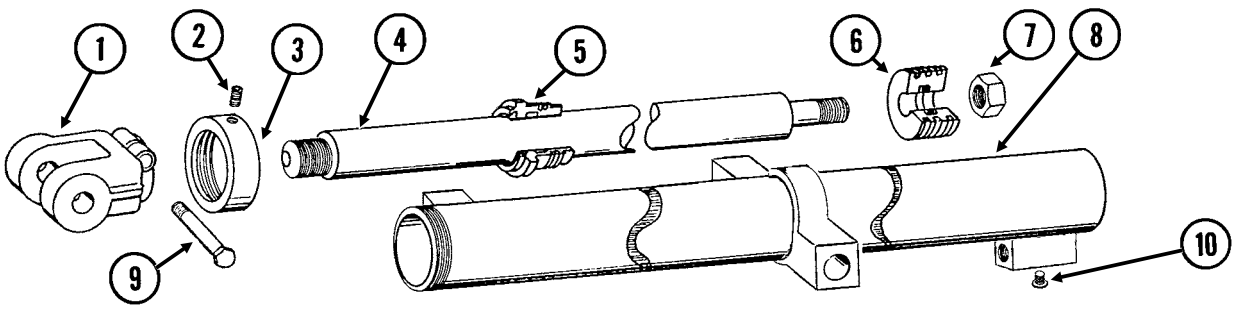

Port Type Rephasing

ITEM	PART NO.	QTY.	DESCRIPTION
1.	GD11951	1	Clevis
2.	G10907	1	Set Screw, ¼"-20 x ¼"
3.	GD11193	1	Cap
4.	GD10936	1	Rod
5.	GD10211	1	Gland
6.	GD11253	1	Piston
7.	G10958	1	Lock Nut, 1"-14
8.	GA8149	1	Barrel
9.	G10939	1	Hex Head Cap Screw, ⅜"-16 x 2 ¼"
	G10108	1	Lock Nut, ⅜"-16
10.	G6408-H04-O	1	Hex Socket Head Plug W/O-Ring, 7⁄16"-20 O-Ring
	GR1465	1	O-Ring
A.	GA8908	-	Cylinder Complete, 3" x 48" *(Part Number Stamped On Barrel)*
B.	GR1428	-	Seal Kit, Includes: (2) O-Rings, (2) BU Rings, (1) Wiper, (1) U-Cup, (1) Piston Seal, (2) Cast Iron Rings, (1) Expander

WING LIFT CYLINDER, 12 ROW

CYL031/CYL011(CYL45d)

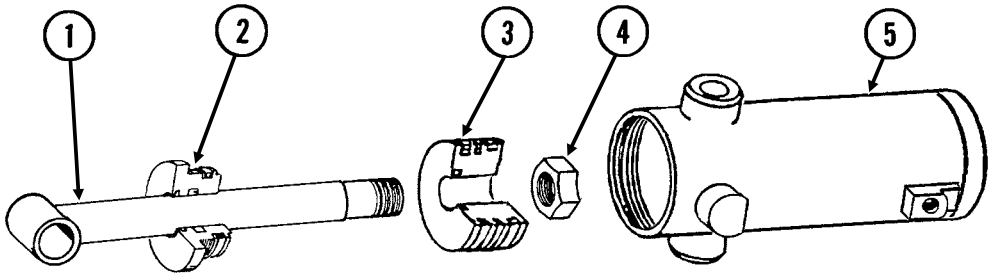

Port Type Rephasing

ITEM	PART NO.	QTY	DESCRIPTION
1.	GA8320	1	Rod Assembly W/Grease Fitting
	G10640	-	Grease Fitting, ¼"-28
2.	GD11995	1	Gland
3.	GD11994	1	Piston
4.	G10958	1	Lock Nut, 1"-14
5.	A8797	1	Barrel **(Non-Stock Item)**
A.	GA8909	-	Cylinder Complete, 4 ¼" x 6" *(Part Number Stamped On Barrel)*
B.	GR1523	-	Seal Kit, Includes: (1) Wiper, (2) O-Rings, (1) BU Ring, (1) U-Cup, (1) Seal, (2) Cast Iron Rings, (1) Expander

WING LIFT CYLINDER, 16 ROW

CYL031/CYL011(CYL41c)

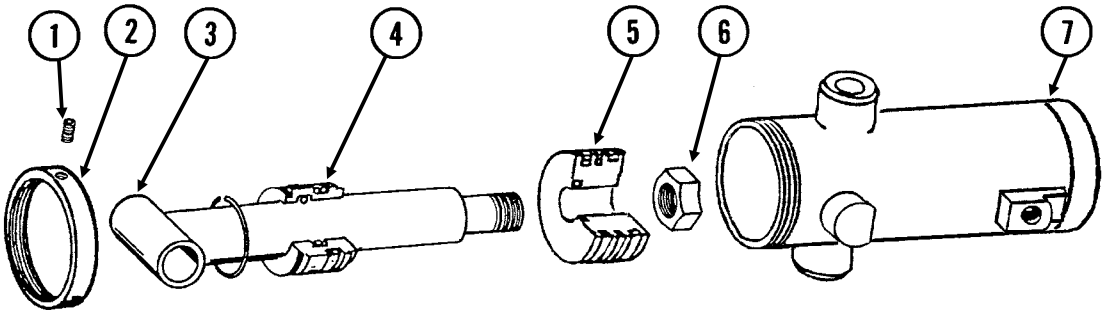

Port Type Rephasing

ITEM	PART NO.	QTY.	DESCRIPTION
1.	G10907	1	Set Screw, ¼"-20 x ¼"
2.	GD11193	1	Cap
3.	GA8157	1	Rod Assembly W/Grease Fitting
	G10449	-	Grease Fitting, 3⁄16", Drive-In
4.	GD11194	1	Gland
5.	GD11253	1	Piston
6.	G10958	1	Lock Nut, 1"-14
7.	A8873	1	Barrel **(Non-Stock Item)**
A.	GA8874	-	Cylinder Complete, 3" x 6" *(Part Number Stamped On Barrel)*
B.	GR1417	-	Seal Kit, Includes: (2) O-Rings, (2) BU Rings, (1) Expander, (1) Wiper, (1) U-Cup, (1) Piston Seal, (2) Cast Iron Rings

TRANSPORT LATCH CYLINDER, ALL SIZES

CYL035/CYL050(CYL9c)

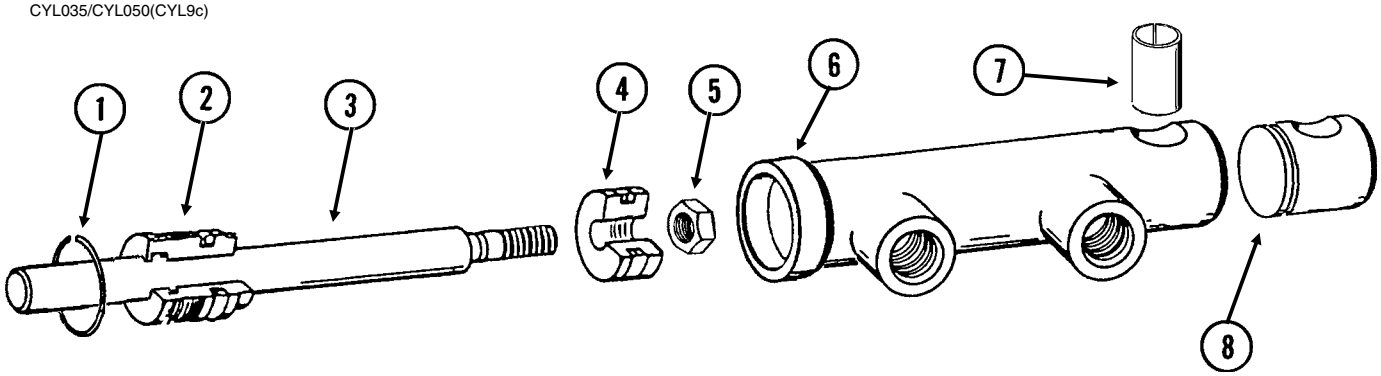

ITEM	PART NO.	QTY.	DESCRIPTION
1.	G10770	1	Internal Retaining Ring, 1 11⁄16"
2.	GD13170	1	Gland
3.	GD13425	1	Rod
4.	GD13172	1	Piston
5.	G11016	1	Lock Nut, ½"-20
6.	D13426	1	Barrel **(Non-Stock Item)**
7.	GD13400	1	Tension Bushing, 1" x 2" Long
8.	GD13173	1	End Cap
A.	GA9559	-	Cylinder Complete, 1 ½" x 2 ½" *(Part Number Stamped On Barrel)*
B.	GR1598	-	Seal Kit, Includes: (3) O-Rings, (2) BU Rings, (1) Wiper, (1) T-Seal, (1) Bronze Bushing, (1) Seal, (1) U-Cup

TONGUE LOCK CYLINDER, ALL SIZES

CYL035(CYL9d)

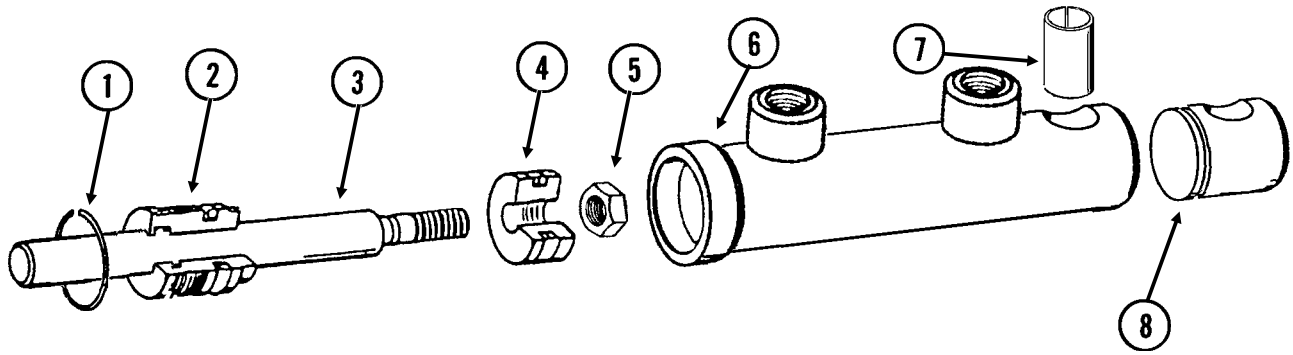

ITEM	PART NO.	QTY.	DESCRIPTION
1.	G10770	1	Internal Retaining Ring, 1 11⁄16"
2.	GD13170	1	Gland
3.	GD13171	1	Rod
4.	GD13172	1	Piston
5.	G11016	1	Lock Nut, ½"-20
6.	D13169	1	Barrel **(Non-Stock Item)**
7.	GD13400	1	Tension Bushing, 1" x 2" Long
8.	GD13173	1	End Cap
A.	GA9205	-	Cylinder Complete, 1 ½" x 2 ½" *(Part Number Stamped On Barrel)*
B.	GR1598	-	Seal Kit, Includes: (3) O-Rings, (2) BU Rings, (1) Wiper, (1) T-Seal, (1) Bronze Bushing, (1) Seal, (1) U-Cup

TONGUE CYLINDER, 12 ROW

(CYL12f)

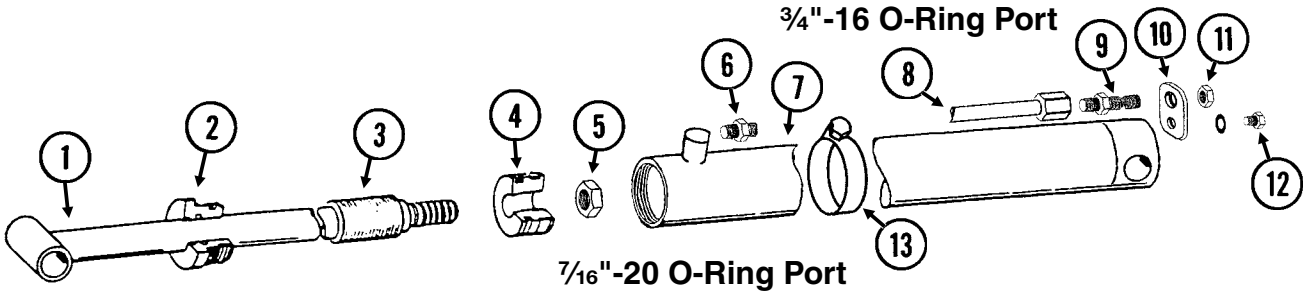

ITEM	PART NO.	QTY.	DESCRIPTION
1.	GA8893	1	Rod Assembly
2.	GD11984	1	Gland
3.	GD7147	1	Spacer
4.	GD11970	1	Piston
5.	G10972	1	Lock Nut, 1 ¼"-12
6.	G6400-08-04	1	Connector W/O-Ring, ¾"-16 Male JIC To 7⁄16"-20 O-Ring
	GR1465	-	O-Ring
7.	GA8858	1	Barrel
8.	GA8978	1	Steel Hydraulic Line, 68 11⁄16"
9.	G2700-08	1	Bulkhead Tube Union, ¾"-16 Male JIC
10.	GD12597	1	Bracket
11.	G306-08	1	Lock Nut, ¾"-16
12.	G10328	1	Hex Head Cap Screw, ⅜"-16 x ⅝"
	G10229	1	Lock Washer, ⅜"
13.	G10990	1	Hose Clamp, No. 52
A.	GA8857	-	Cylinder Complete, 3" x 60" *(Part Number Stamped On Barrel)*
B.	GR1519	-	Seal Kit, Includes: (2) O-Rings, (1) BU Ring, (1) Wear Ring, (1) Wiper, (1) U-Cup, (1) T-Seal

TONGUE CYLINDER, 16 ROW

CYL036(CYL12f)

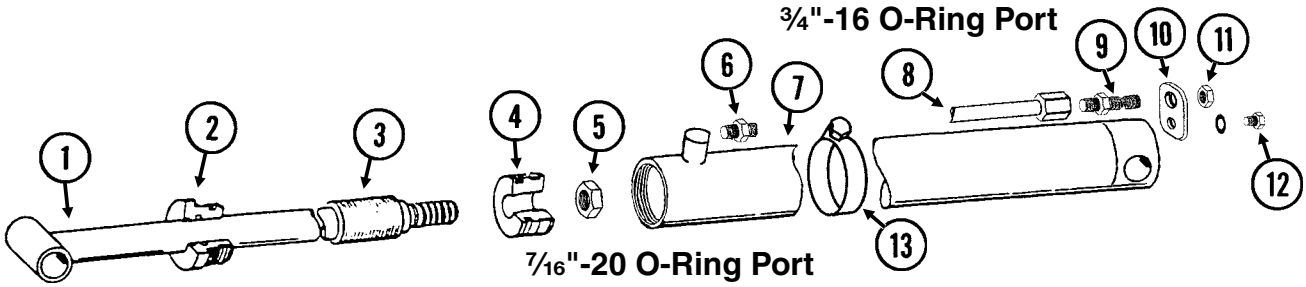

ITEM	PART NO.	QTY.	DESCRIPTION
1.	GA8859	1	Rod Assembly
2.	GD11984	1	Gland
3.	GD7147	1	Spacer
4.	GD11970	1	Piston
5.	G10972	1	Lock Nut, 1 ¼"-12
6.	G6400-08-04	1	Connector W/O-Ring, ¾"-16 Male JIC To 7⁄16"-20 O-Ring
	GR1465	-	O-Ring
7.	GA8861	1	Barrel
8.	GA8979	1	Steel Hydraulic Line, 92 11⁄16"
9.	G2700-08	1	Bulkhead Tube Union, ¾"-16 Male JIC
10.	GD12597	1	Bracket
11.	G306-08	1	Lock Nut, ¾"-16
12.	G10328	1	Hex Head Cap Screw, ⅜"-16 x ⅝"
	G10229	1	Lock Washer, ⅜"
13.	G10990	1	Hose Clamp, No. 52
A.	GA8862	-	Cylinder Complete, 3" x 84" *(Part Number Stamped On Barrel)*
B.	GR1519	-	Seal Kit, Includes: (2) O-Rings, (1) BU Ring, (1) Wear Ring, (1) Wiper, (1) U-Cup, (1) T-Seal

WING LOCK CYLINDER, ALL SIZES

CYL032(CYL3f)

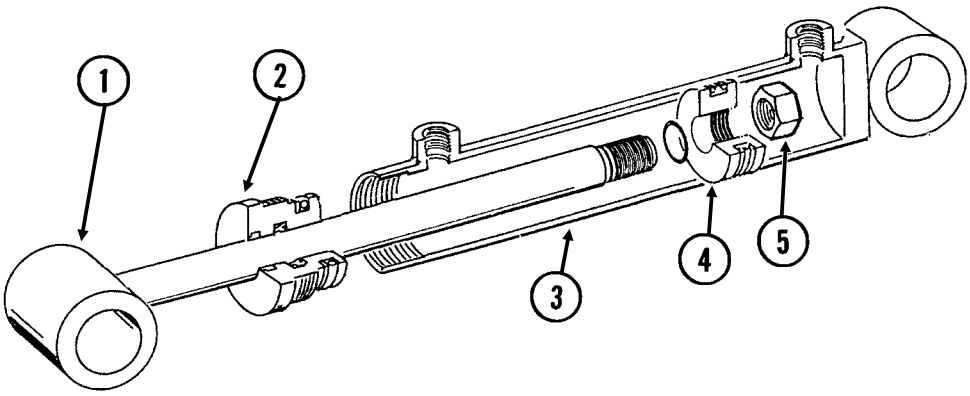

ITEM	PART NO.	QTY.	DESCRIPTION
1.	GA8898	1	Rod Assembly
2.	GD11985	1	Gland
3.	A8822	1	Barrel **(Non-Stock Item)**
4.	GD11986	1	Piston
5.	G10969	1	Lock Nut, ⅞"-14
A.	GA8899	-	Cylinder Complete, 2 ½" x 20 1⁄16" *(Part Number Stamped On Barrel)*
B.	GR1522	-	Seal Kit, Includes: (1) T-Seal, (2) O-Rings, (1) BU Ring, (1) U-Cup, (1) Wiper

ROW MARKER (Cushion) CYLINDER, ALL SIZES

(CYL3d)

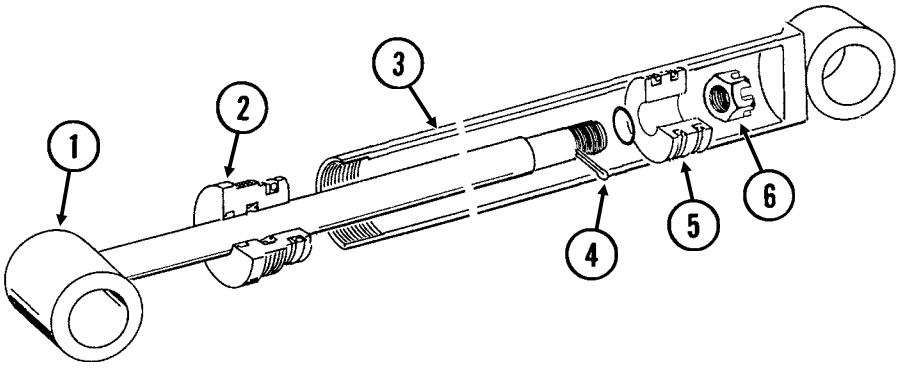

ITEM	PART NO.	QTY.	DESCRIPTION
1.	GA8871	1	Rod Assembly
2.	GD10207	1	Gland
3.	A7524	1	Barrel **(Non-Stock Item)**
4.	G10827	1	Cotter Pin, ⅛" x 1 ¾"
5.	GD11983	1	Piston
6.	G10962	1	Slotted Hex Nut, ⅞"-14
A.	GA8895	-	Cylinder Complete, 2 ½" x 20 1⁄16" *(Part Number Stamped On Barrel)*
B.	GR1521	-	Seal Kit, Includes: (1) T-Seal, (2) O-Rings, (1) BU Ring, (1) Cast Iron Ring, (1) Wiper, (1) U-Cup

JUNCTION BLOCK - LOCATED ON R.H. SIDE OF CENTER PIVOT

VVB036(TWL24)

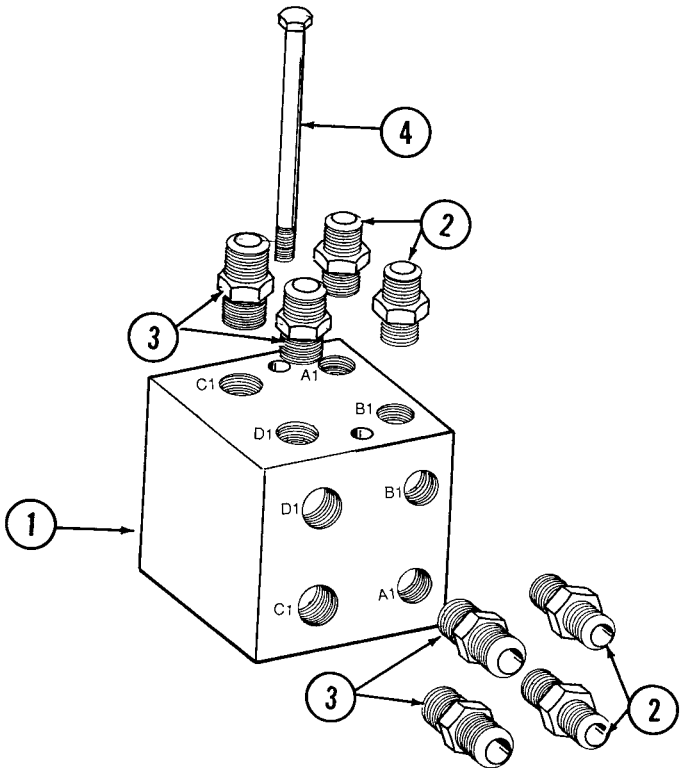

ITEM	PART NO.	QTY.	DESCRIPTION
1.	GD9971	1	Manifold Block
2.	G6400-08	4	Connector W/O-Ring, ¾"-16 Male JIC To O-Ring
	GR1037	-	O-Ring
3.	G6400-10-08	4	Connector W/O-Ring, ⅞"-14 Male JIC To ¾"-16 O-Ring
	GR1037	-	O-Ring
4.	G10172	2	Hex Head Cap Screw, ⅜"-16 x 5"
	G10229	2	Lock Washer, ⅜"
	G10101	2	Hex Nut, ⅜"-16

VALVE BLOCKS - LOCATED ON R.H. REAR CENTER FRAME

VVB034(TWL25e)

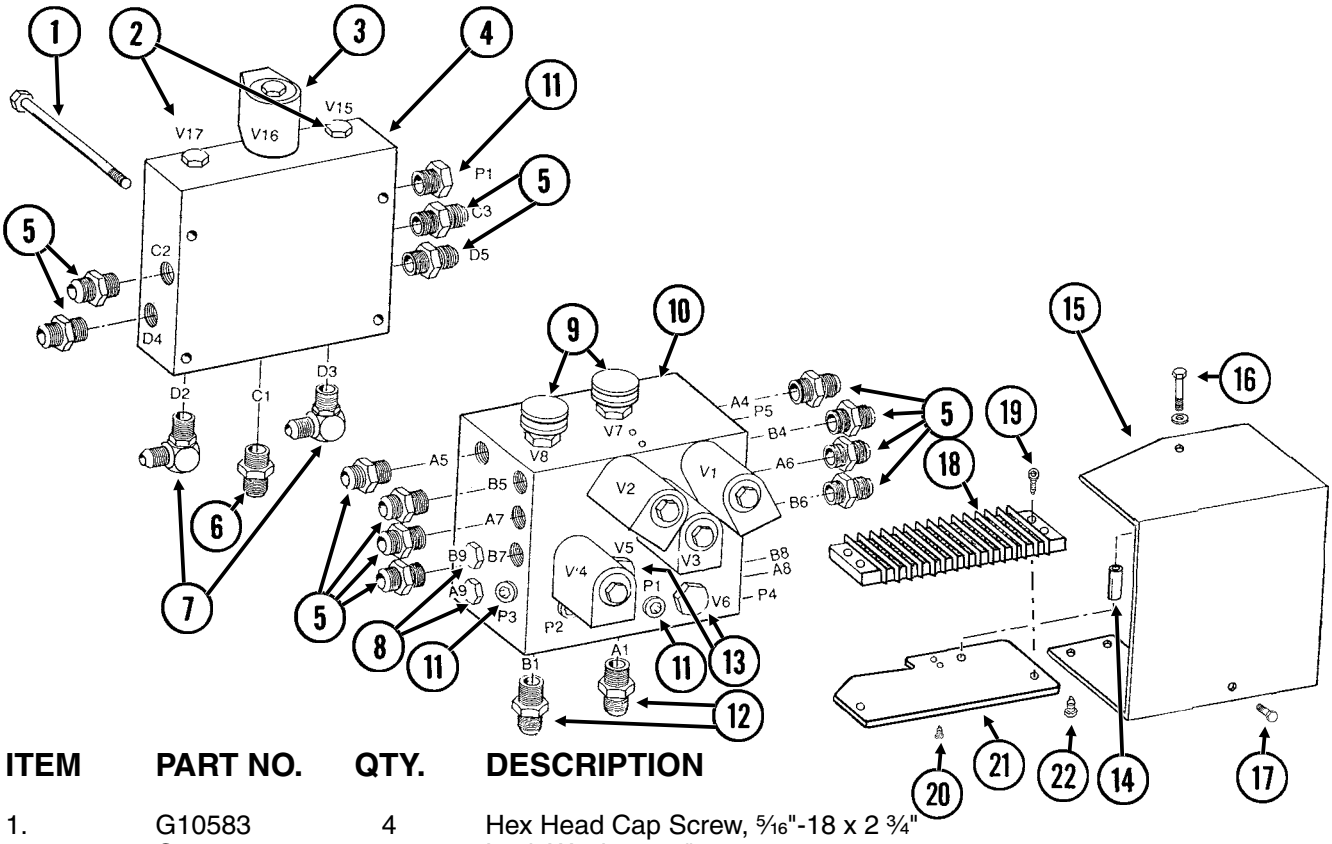

ITEM	PART NO.	QTY.	DESCRIPTION
1.	G10583	4	Hex Head Cap Screw, 5⁄16"-18 x 2 3⁄4"
	G10232	4	Lock Washer, 5⁄16"
2.		2	See “Check Valve”, Page P77
3.		5	See “Solenoid Valve”, Page P76
24.	GD9977	1	Block
5.	G6400-08	12	Connector W/O-Ring, 3⁄4"-16 Male JIC To O-Ring
	GR1037	-	O-Ring
6.	G6400-10	1	Connector W/O-Ring, 7⁄8"-14 Male JIC To O-Ring
	GR1466	-	O-Ring
7.	G6801-08-10	2	Elbow W/O-Ring, 90°, 3⁄4"-16 Male JIC To 7⁄8"-14 O-Ring
	GR1466	-	O-Ring
8.	G6408-08	4	Plug W/O-Ring, 3⁄4"-16 O-Ring
	GR1037	-	O-Ring
9.		2	See “Flow Control Valve”, Page P76
10.	GD9533	1	Block
11.	G6408-H06-O	6	Hex Socket Head Plug W/O-Ring, 9⁄16"-18 O-Ring
	GR1045	-	O-Ring
12.	G6400-08-10	2	Connector W/O-Ring, 3⁄4"-16 Male JIC To 7⁄8"-14 O-Ring
	GR1466	-	O-Ring
13.	G6408-10	2	Plug W/O-Ring, 7⁄8"-14 O-Ring
	GR1466	-	O-Ring
14.	GD8066-02	1	Sleeve, 1" Long
15.	GD13146	1	Cover
16.	G10133	1	Hex Head Cap Screw, 5⁄16"-18 x 1 1⁄2"
	G10232	1	Lock Washer, 5⁄16"
17.	G10054	1	Hex Head Cap Screw, 5⁄16"-18 x 1⁄2"
	G10232	1	Lock Washer, 5⁄16"
	G10106	1	Hex Nut, 5⁄16"-18
18.	GA9097	1	Terminal Strip W/Screws, No. 6, 14 Terminal
	GR1635	-	Screw, No. 6-32 x 1⁄4"
19.	G11067	2	Phillips Pan Head Machine Screw, No. 8-32 x 3⁄4", Stainless Steel
20.	G11066	2	Phillips Pan Head Machine Screw, No. 10-24 x 3⁄4", Stainless Steel
21.	GA9095	1	Terminal Strip Mount
22.	G10977	2	Phillips Pan Head Machine Screw, No. 10-24 x 1⁄2", Stainless Steel

VALVE BLOCK - LOCATED ON HITCH

VVB035(TWL26f)

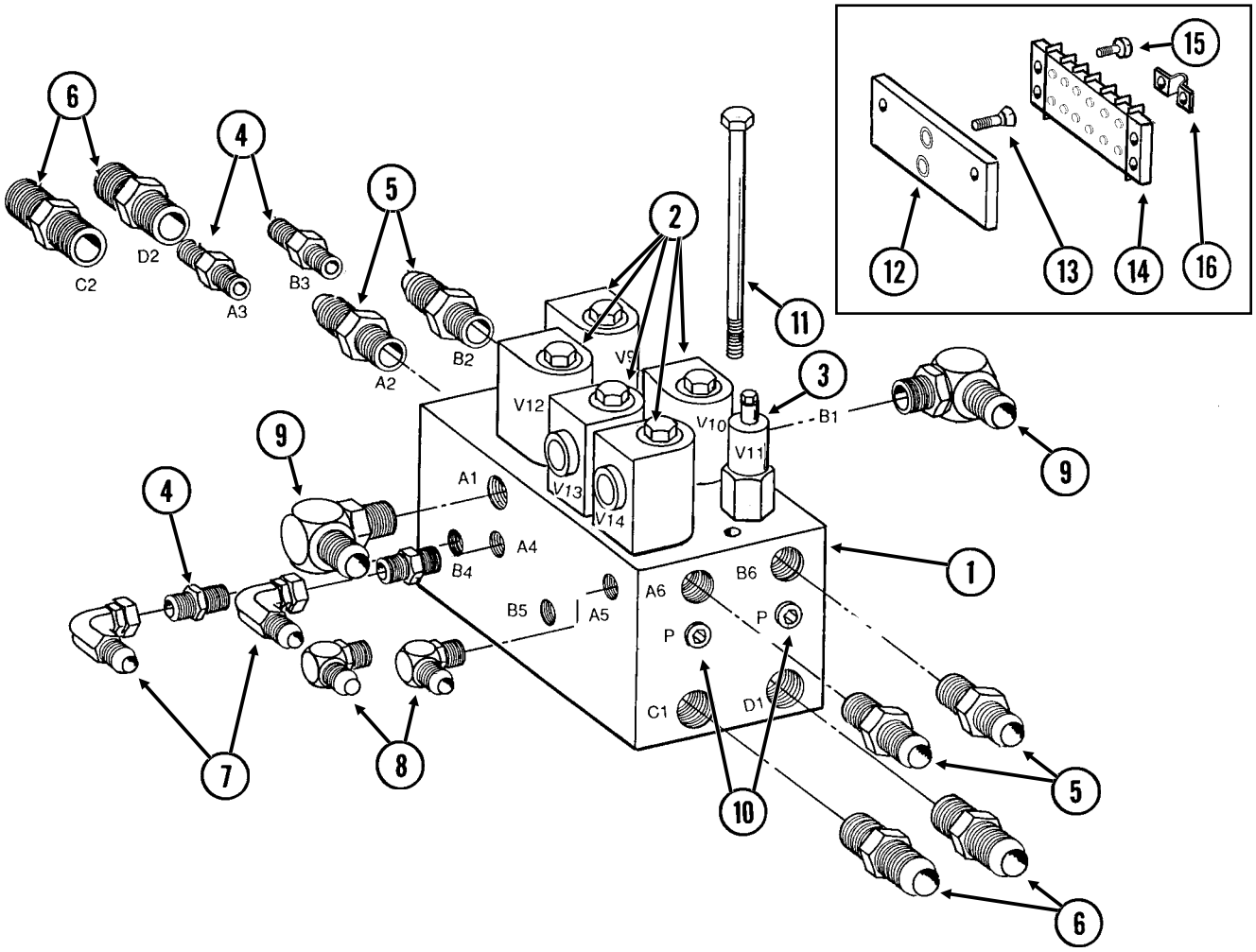

VALVE BLOCK - LOCATED ON HITCH

ITEM	PART NO.	QTY.	DESCRIPTION
1.	GD9905	1	Block
2.		-	See “Solenoid Valve”, Page P76
3.		-	See “Pressure Relief Valve”, Page P77
4.	G6400-06	4	Connector W/O-Ring, 9⁄16"-18 Male JIC To O-Ring
	GR1045	-	O-Ring
5.	G6400-08	4	Connector W/O-Ring, 3⁄4"-16 Male JIC To O-Ring
	GR1037	-	O-Ring
6.	G6400-10	4	Connector W/O-Ring, 7⁄8"-14 Male JIC To O-Ring
	GR1466	-	O-Ring
7.	G6500-06	2	Swivel Elbow, 90°, 9⁄16"-18 Male JIC To Female
8.	G6801-06	2	Elbow W/O-Ring, 90°, 9⁄16"-18 Male JIC To O-Ring
	GR1045	-	O-Ring
9.	G6801-08	2	Elbow W/O-Ring, 90°, 3⁄4"-16 Male JIC To O-Ring
	GR1037	-	O-Ring
10.	G6408-H06-O	2	Hex Socket Head Plug W/O-Ring, 9⁄16"-18 O-Ring
	GR1045	-	O-Ring
11.		-	See “Hose Take-Up”, Pages P42 And P43
12.	GD12818	-	Terminal Strip Mount
13.	G11068	2	Phillips Flat Head Machine Screw, No. 10-24 x 5⁄8", Stainless Steel
14.	GA9098	-	Terminal Strip W/Screws, No. 6, 8 Terminal
	GR1635	-	Screw, No. 6-32 x 1⁄4"
15.	G11065	2	Phillips Pan Head Machine Screw, No. 8-32 x 5⁄8", Stainless Steel
16.		-	See “Electrical Components”, Pages P84 And P85

VALVE BLOCK - LOCATED ON L.H. REAR CENTER FRAME

(PNE39)

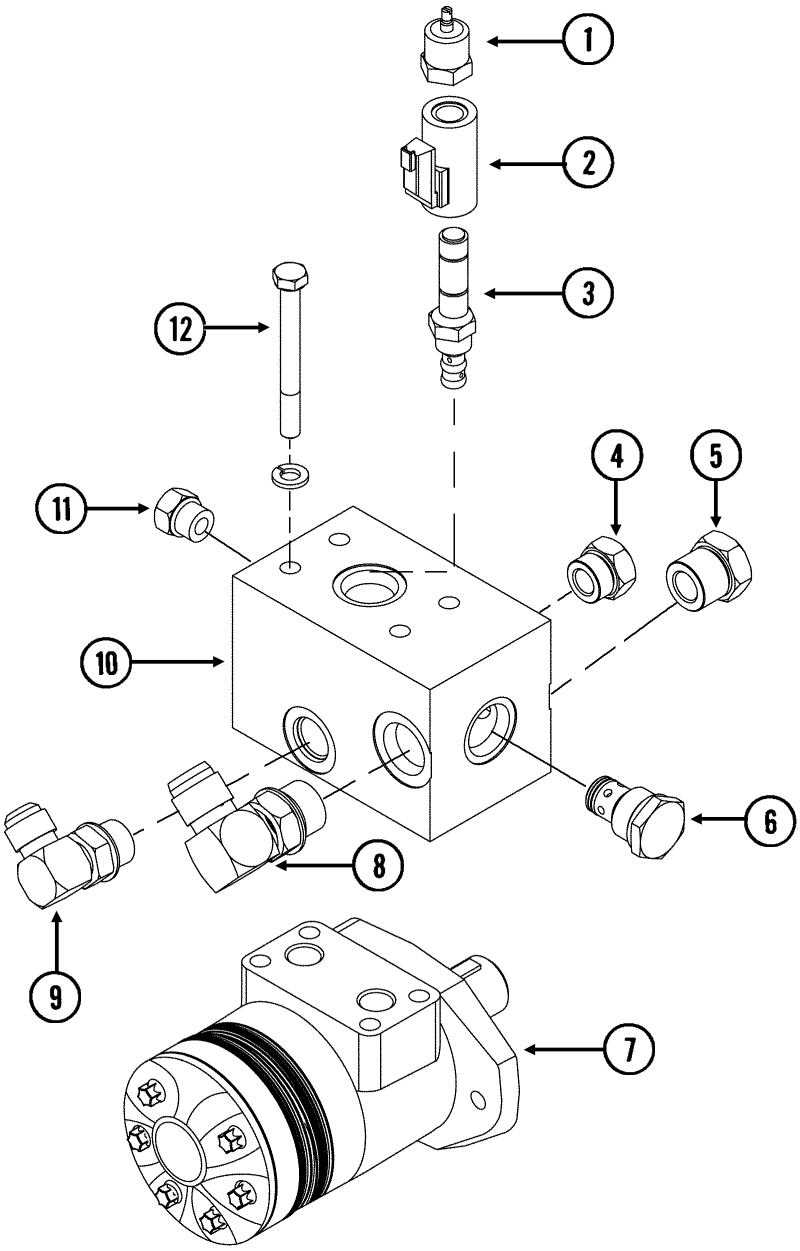

VALVE BLOCK - LOCATED ON L.H. REAR CENTER FRAME

ITEM	PART NO.	QTY.	DESCRIPTION
1.	GR1846	1	Manual Override
2.	GA13079	1	Coil
3.			See “Proportional Valve”, Page P77
4.	G6408-H08-00	1	Hex Socket Head Plug W/O-Ring, ¾"-16 O-Ring
5.	G6408-H10-00		Hex Socket Head Plug W/O-Ring, ⅞"-14 O-Ring
6.			See “Check Valve”, Page P77
7.	GA13219	1	Hydrualic Motor
8.	G6801-10	1	Elbow W/O-Ring, 90°, ⅞"-14 Male JIC To O-Ring
	GR1466	-	O-Ring
9.	G6801-08	1	Elbow W/O-Ring, 90°, ¾"-16 Male JIC To O-Ring
	GR1037	-	O-Ring
10.	GD18512	1	Valve Block
11.	G6408-H06-00	1	Hex Socket Head Plug W/O-Ring, 9⁄16"-18 O-Ring
12.	G10936	4	Hex Head Cap Screw, 5⁄16"-18 x 3 ½"
	G10232	4	Lock Washer, 5⁄16"

SOLENOID VALVE

VVB019(TWL27c/TWL18/PLTR75c/A9481)

ITEM	PART NO.	QTY.	DESCRIPTION
1.	GR0761	1	Special Hex Nut, ½"-20
2.	G1K274	1	Coil Kit W/Coil, Contacts, Housings And Fork Terminals
	GD9529	2	Housing, Black
	GD9530	2	Contact
	G10996	2	Fork Terminal
3.	GR0763	1	Cartridge
A.	G1K275	-	Solenoid Valve Kit W/Solenoid Valve, Contacts, Housings And Fork Terminals
	GD9529	2	Housing, Black
	GD9530	2	Contact
	G10996	2	Fork Terminal
B.	GR0764	-	Seal Kit, Includes: (2) O-Rings, (1) BU Ring

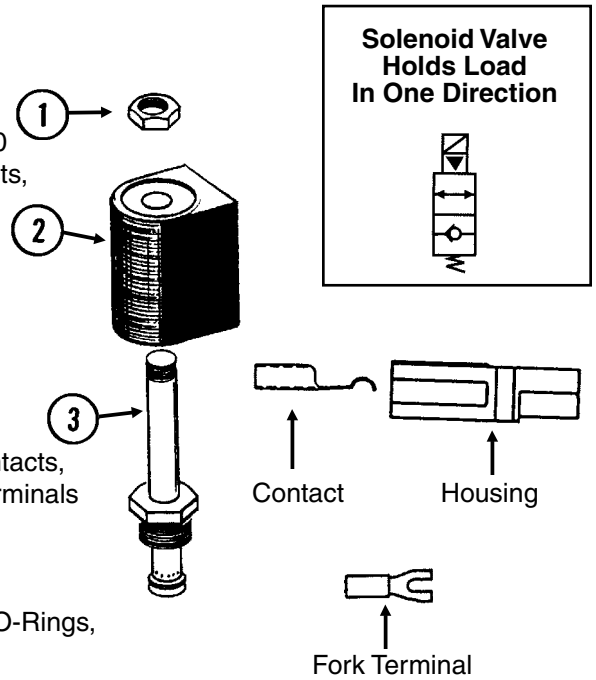

FLOW CONTROL VALVE

VVB020(TWL28)

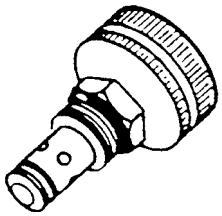

ITEM	PART NO.	QTY.	DESCRIPTION
A.	GA3413	-	Flow Control Valve
B.	GR0764	-	Seal Kit, Includes: (2) O-Rings, (1) BU Ring

CHECK VALVE

VVB020(TWL30)

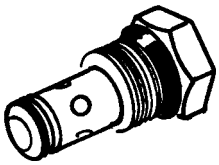

ITEM	PART NO.	QTY.	DESCRIPTION
A.	GA4293	-	Check Valve
B.	GR0764	-	Seal Kit, Includes: (2) O-Rings, (1) BU Ring

PRESSURE RELIEF VALVE

VVB020(TWL29)

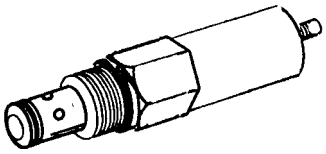

ITEM	PART NO.	QTY.	DESCRIPTION
A.	GA3407	-	Pressure Relief Valve, 1000 PSI
B.	GR0764	-	Seal Kit, Includes: (2) O-Rings, (1) BU Ring

PROPORTIONAL VALVE

(TWL322)

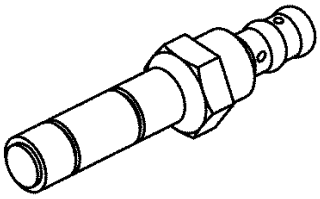

ITEM	PART NO.	QTY.	DESCRIPTION
A.	GA13078	-	Proportional Valve
B.	GR0764	-	Seal Kit, Includes: (2) O-Rings, (1) BU Ring

HYDRAULIC HOSES AND FITTINGS ON HITCH

(TWL107d/TWL107b)

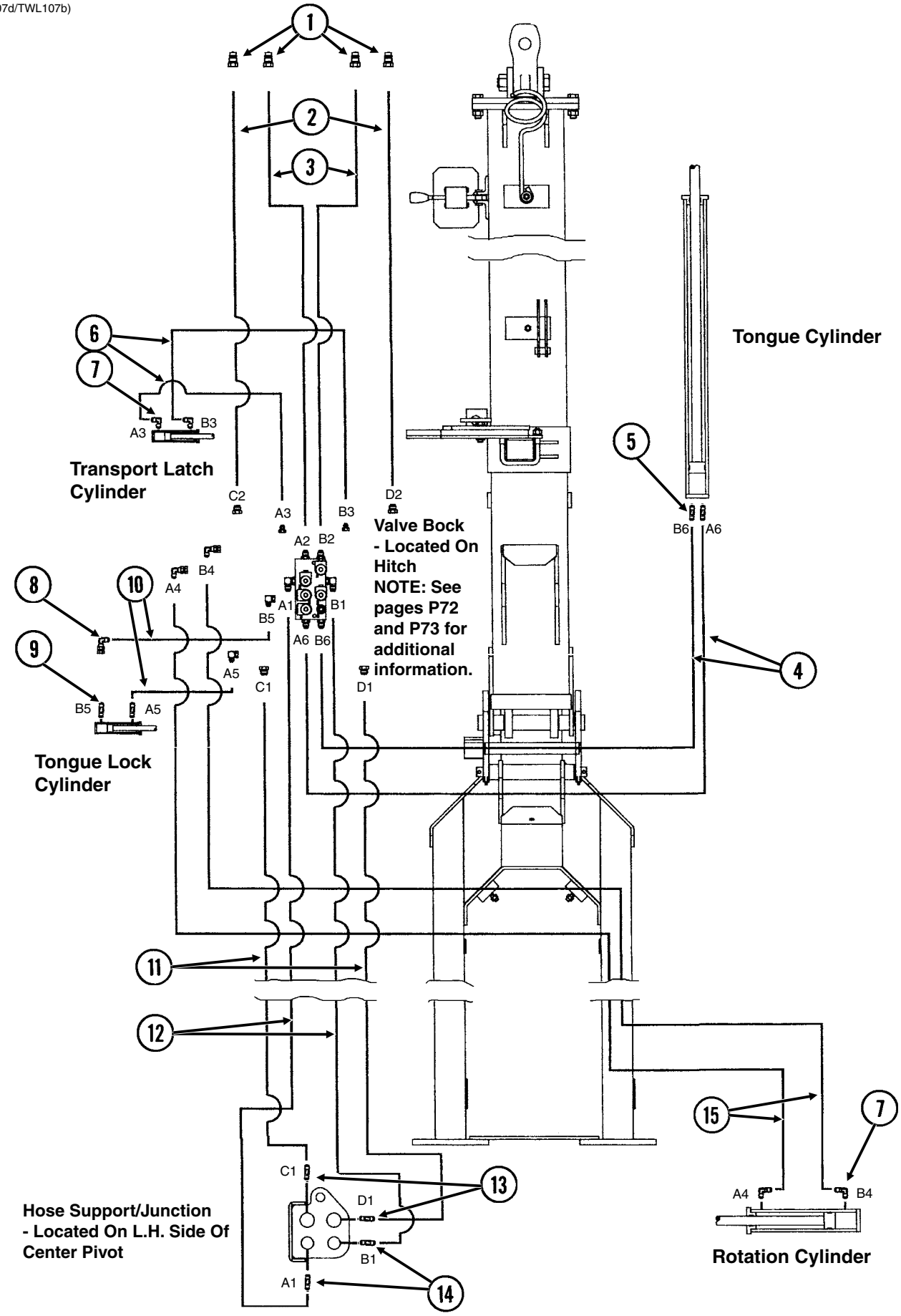

HYDRAULIC HOSES AND FITTINGS ON HITCH

ITEM	PART NO.	QTY.	DESCRIPTION
1.	GD4086	4	ISO Coupler
2.	*A1489	2	Hose Assembly, ½" x 191", 12 Row
	*A1491	2	Hose Assembly, ½" x 246", 16 Row
3.	*A3133	2	Hose Assembly, ⅜" x 191", 12 Row
	*A3183	2	Hose Assembly, ⅜" x 246", 16 Row
4.	*A3156	2	Hose Assembly, ⅜" x 68", 12 Row
	*A3118	2	Hose Assembly, ⅜" x 80", 16 Row
5.	G6400-08	1	Connector W/O-Ring, ¾"-16 Male JIC To O-Ring
	GR1037	-	O-Ring
6.	*A7603	2	Hose Assembly, ¼" x 112", 12 Row
	*A1129	2	Hose Assembly, ¼" x 168", 16 Row
7.	G6801-06-08	4	Elbow W/O-Ring, 90°, 9/16"-18 Male JIC To ¾"-16 O-Ring
	GR1037	-	O-Ring
8.	G6502-06	1	Swivel Elbow, 45°, 9/16"-18 Male JIC To Female
9.	G6400-06-08	2	Connector W/O-Ring, 9/16"-18 Male JIC To ¾"-16 O-Ring
	GR1037	-	O-Ring
10.	*A1139	2	Hose Assembly, ¼" x 40"
11.	*A1467	2	Hose Assembly, ½" x 120", 12 Row
	*A1478	2	Hose Assembly, ½" x 128", 16 Row
12.	*A1011	2	Hose Assembly, ⅜" x 125", 12 Row
	*A1041	2	Hose Assembly, ⅜" x 130", 16 Row
13.	G2700-10	2	Bulkhead Tube Union, ⅞"-14 Male JIC
14.	G2700-08	2	Bulkhead Tube Union, ¾"-16 Male JIC
15.	*A1106	2	Hose Assembly, ¼" x 130", 12 Row
	*A1116	2	Hose Assembly, ¼" x 136", 16 Row

*** Hydraulic hose is not stocked by KINZE® Repair Parts, but can be made available on a special order basis. Call for quote.**

HYDRAULIC HOSES AND FITTINGS ON PLANTER FRAME

(TWL105b)

16 Row Shown (Two Wing Lift Cylinders Per Wing)
12 Row (One Wing Lift Cylinder Per Wing)

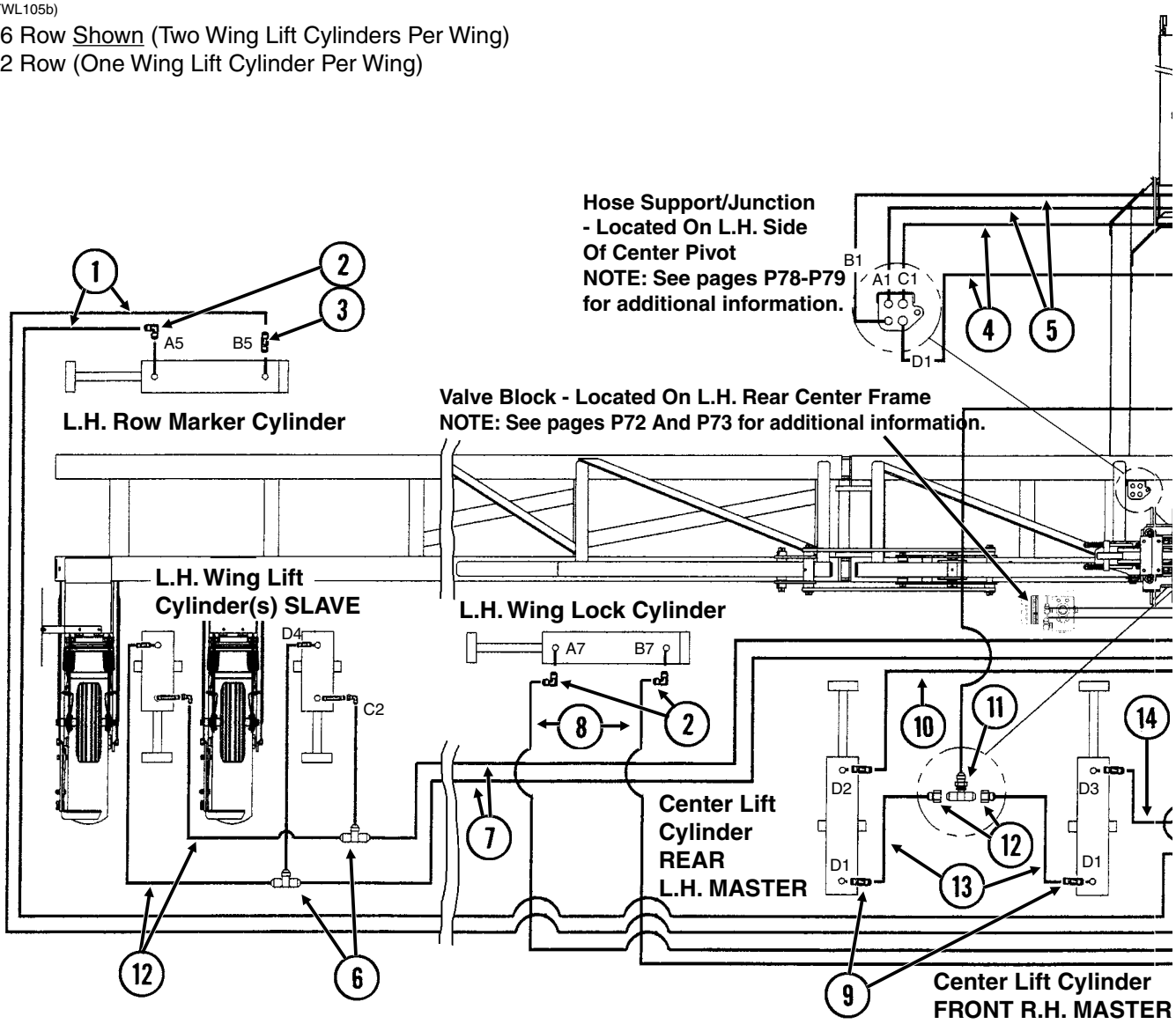

ITEM	PART NO.	QTY.	DESCRIPTION
1.	*A12042	2	Hose Assembly, ⅜" x 228", 12 Row
	*A1097	2	Hose Assembly, ⅜" x 288", 16 Row
2.	G6801-08	6	Elbow W/O-Ring, 90°, ¾"-16 Male JIC To O-Ring
	GR1037	-	O-Ring
3.	G6400-08-04	2	Connector W/O-Ring, ¾"-16 Male JIC To 7⁄16"-20 O-Ring
	GR1465	-	O-Ring
4.	*A8267	2	Hose Assembly, ½" x 58"
5.	*A3127	2	Hose Assembly, ⅜" x 58"
6.	G2603-08	4	Tee, ¾"-16 Male JIC, 16 Row
7.	*A1033	2	Hose Assembly, ⅜" x 250", 12 Row
	*A1034	2	Hose Assembly, ⅜" x 272", 16 Row
8.	*A1055	2	Hose Assembly, ⅜" x 66"
9.	G6400-08	8	Connector W/O-Ring, ¾"-16 Male JIC To O-Ring
	GR1037	-	O-Ring
10.	*A3128	1	Hose Assembly, ⅜" x 52"
11.	G2703-08-08-10	1	Bulkhead Tee ⅞"-14 Male JIC To ¾"-16 JIC
12.	*A1018	4	Hose Assembly, ⅜" x 40"
13.	*A1076	2	Hose Assembly, ⅜" x 30"

HYDRAULIC HOSES AND FITTINGS ON PLANTER FRAME

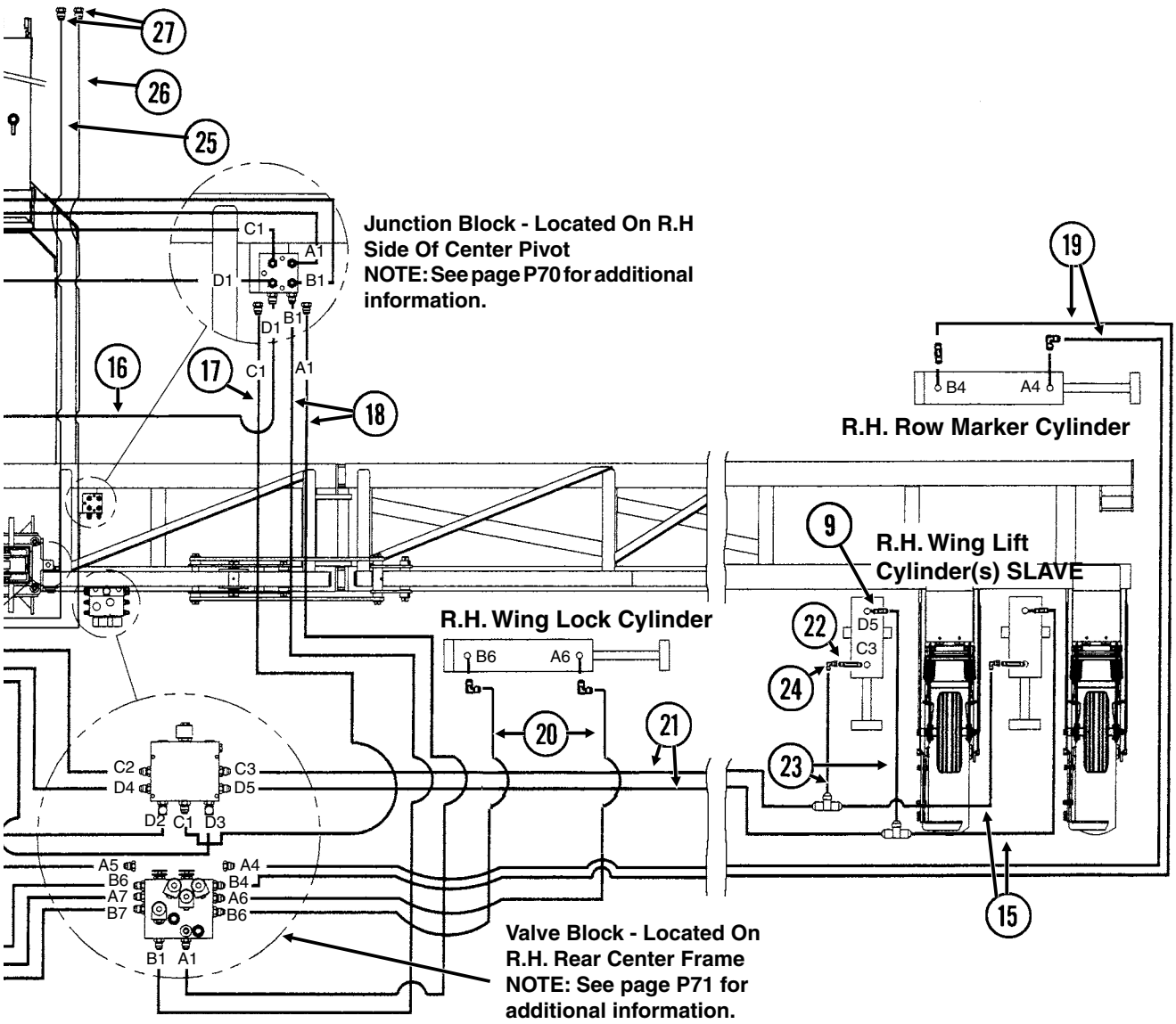

ITEM	PART NO.	QTY.	DESCRIPTION
14.	*A3131	1	Hose Assembly, ⅜" x 42"
15.	*A1028	4	Hose Assembly, ⅜" x 40", 12 Row
16.	*A1404	1	Hose Assembly, ½" x 41"
17.	*A1424	1	Hose Assembly, ½" x 30"
18.	*A1076	2	Hose Assembly, ⅜" x 30"
19.	*A1027	2	Hose Assembly, ⅜" x 182", 12 Row
	*A1097	2	Hose Assembly, ⅜" x 288", 16 Row
20.	*A1076	2	Hose Assembly, ⅜" x 30"
21.	*A1057	2	Hose Assembly, ⅜" x 216", 16 Row
22.	G6400-L-08	-	Long Connector W/O-Ring, ¾"-16 Male JIC To O-Ring
	GR1037	-	O-Ring
23.	*A3122	4	Hose Assembly, ⅜" x 10 ½", 16 Row 30"
24.	G6500-08	-	Swivel Elbow, 90°, ¾"-16 Male JIC To Female
25.	GA12044	1	Hose Assembly, ⅜" x 510"
26.	GA8286	1	Hose Assembly, ½" x 510"
27.	GD4086	2	ISO Coupler

*** Hydraulic hose is not stocked by KINZE® Repair Parts, but can be made available on a special order basis. Call for quote.**

VALVE BOX MODULE

(A12554)

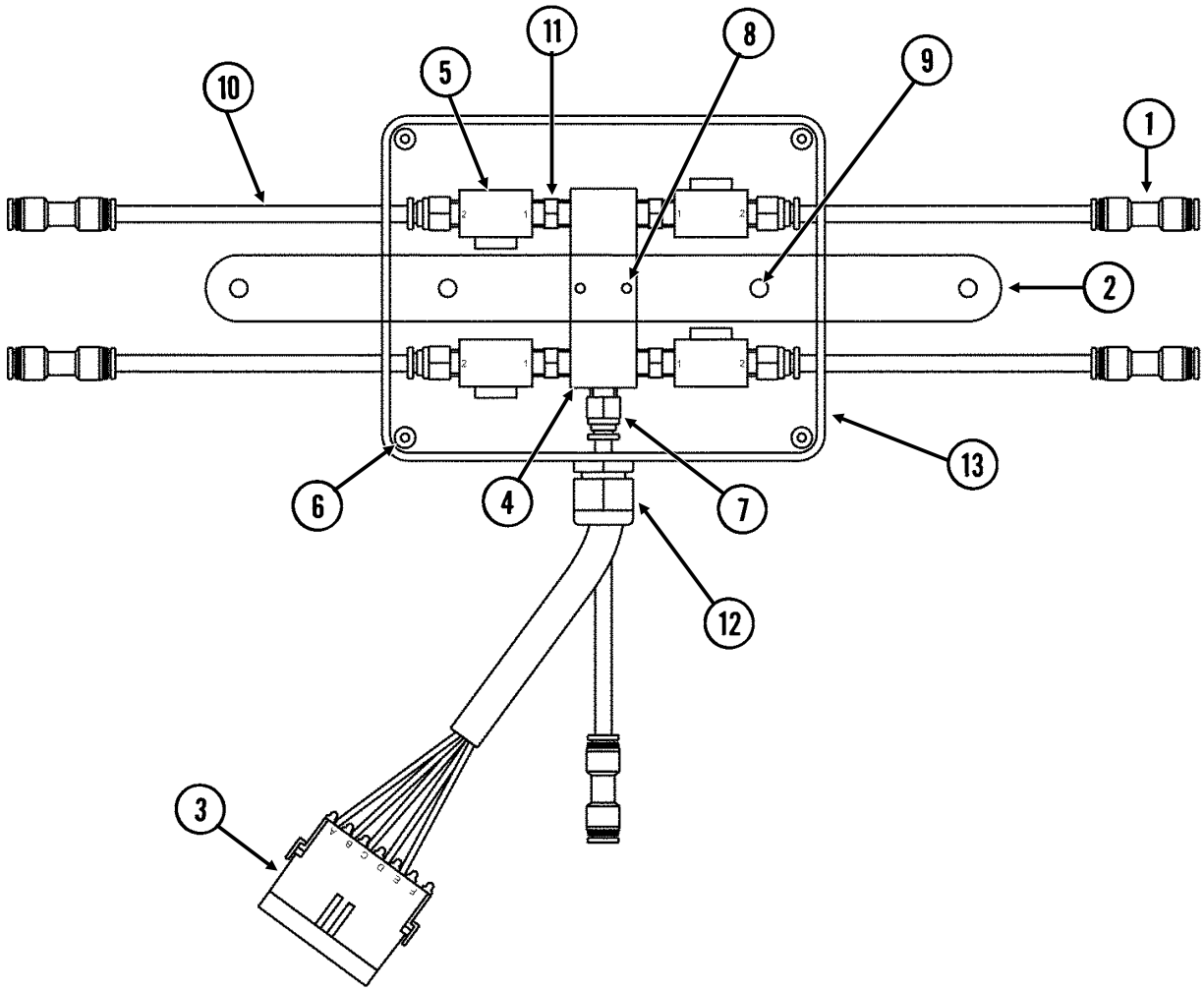

VALVE BOX MODULE

ITEM	PART NO.	QTY.	DESCRIPTION
1.	GD18395	5	Straight Union, ¼"
2.	GD18389	1	Strap
3.	GA12861	1	Valve Box Harness
4.	GA12865	1	Manifold
5.	GA12866	4	Valve
6.	G11243	4	Slotted Flat Head Machine Screw, No. 8-32 x ½", Stainless Steel
7.	GD18085	5	Male Connector, ¼"
8.	G11244	2	Phillips Flat Head Machine Screw, No. 10-24 x 1 ½"
	G10395	2	Hex Nut, No. 10-24
9.	G10022	2	Hex Head Cap Screw, ¼"-20 x ½"
	G10110	2	Lock Nut, ¼"-20, Grade B
10.	GD17151-05	5	Nylon Tube, ¼" O.D. x 5" Long
11.	GD18398	5	Hex Nipple, ⅛" Pipe
12.	GA9963	1	Strain Relief
13.	GD18437	1	Valve Box Cover
A.	GA12554	-	Valve Box Module Assembly, (Items 1-13)

ELECTRICAL COMPONENTS

(TWL19a/TWL18/ELC14/ELC3a/ELC5c/MTR27a/ELC39/TWL26e/ELC8/A9481/ELC12b/MTR27t/A9689b/A10924ELC4/FF27b/FF27c/ELC38/A9201a/A9202a/TWL20g/ELC34/ELC35/ELC10c)

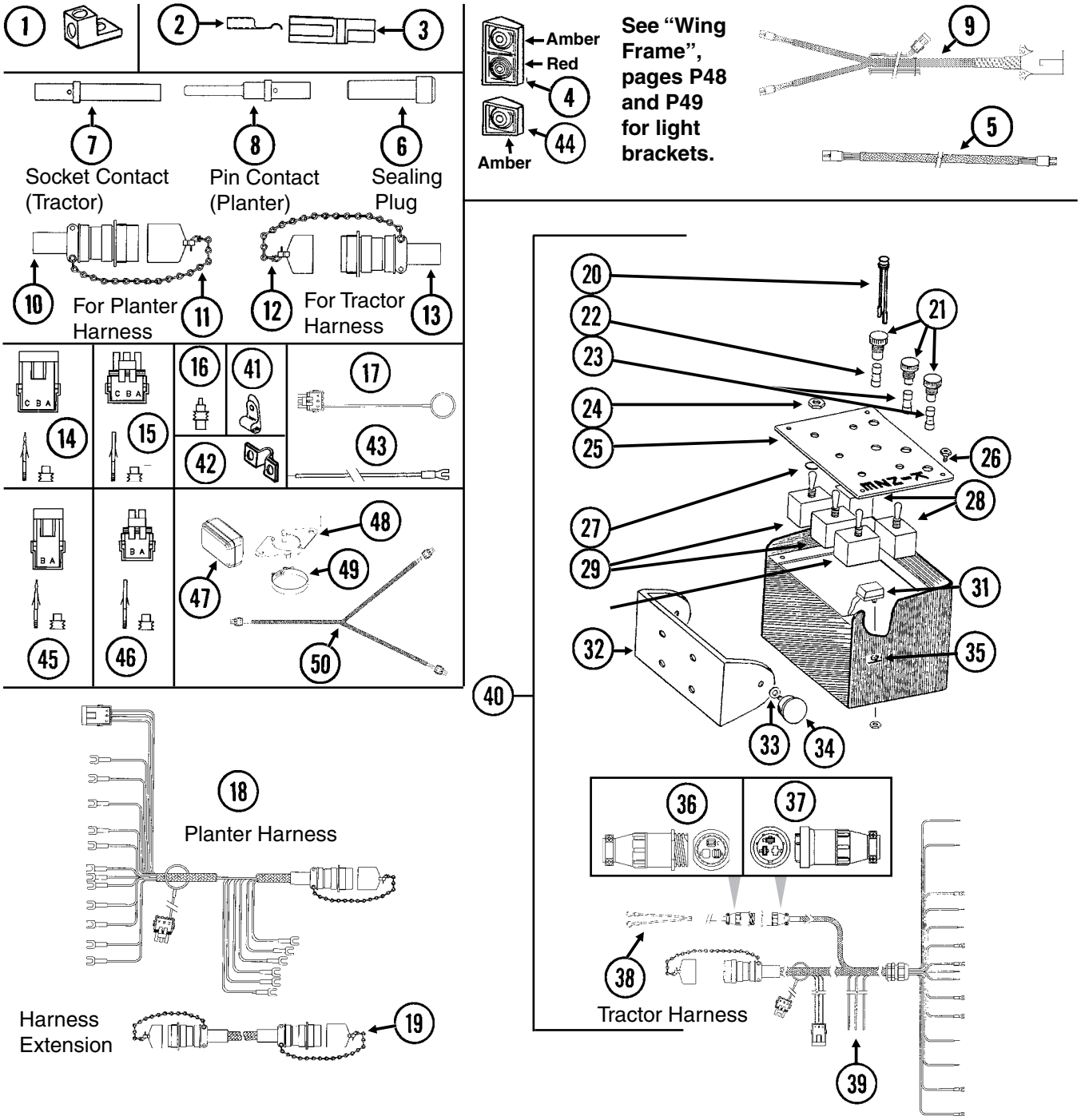

ITEM	PART NO.	QTY.	DESCRIPTION
1.	GA3584	-	Ground Clamp
2.	GD9530	-	Contact
3.	GD9529	-	Housing, Black
	GD12726	-	Housing, Red
4.	GA6699	1	Double Light Assembly (Shown)
	GA6700	1	Double Light Assembly
	GR1203	-	Red Lens
	GR1204	-	Amber Lens
	GR1205	-	Cover
	GR1206	-	Rubber Grommet (4)
	GR1207	-	Lamp Unit
	GR1208	-	Bulb
5.	GA9096	-	Harness Extension, 42"
6.	GD8739	-	Sealing Plug, No. 12

ELECTRICAL COMPONENTS

ITEM	PART NO.	QTY.	DESCRIPTION
7.	GD8740	-	Socket Contact, No. 14
8.	GD8741	-	Pin Contact, No. 14
9.	GA9202	-	Wiring Harness W/7 Terminal Female Connector, 786" (2 Light Connections), 12 Row
	GA9204	-	Wiring Harness W/7 Terminal Female Connector, 882" (2 Light Connections), 16 Row
	GA5385	-	7 Terminal Female Connector
10.	GA6109	1	Connector W/Cable Clamp, 23 Pin Capacity
11.	GA7862	-	Dust Cap W/Chain
12.	GA7863	-	Dust Cap W/Chain
13.	GA6108	1	Connector W/Cable Clamp, 23 Socket Capacity
14.	G1K248	-	3-Pin Female Connector Kit (Black), Includes: (3) 3-Pin Female Housings, (9) Pin Contacts, (9) Seals
15.	G1K252	-	3-Pin Male Connector Kit (Black), Includes: (3) 3-Pin Male Housings, (9) Socket Contacts, (9) Seals
16.	GD11089	-	Sealing Plug
17.	GA8047	-	Dust Plug (Black)
18.	GA9112	1	Wiring Harness W/Dust Cap, 516", 12 Row
	GA9113	-	Wiring Harness W/Dust Cap, 636", 16 Row
19.	GA7399	-	Harness Extension W/Dust Caps, 180"
20.	GA7077	1-4	Indicator Light
21.	GA2612	3-5	Fuse Holder W/Spade, 1 33/50"
22.	GD2829	1-2	Fuse, 15 Amp, Type AGC
23.	GD10243	2-6	Fuse, MDL 10 Amp Delay Action
24.	GR1363	5	Hex Face Nut, 15/32"-32
	GR1364	5	Internal Tooth Lock Washer, 15/32"
25.	GA8734	1	Cover Plate (Shown)
26.	GR1292	4	Pan Head Screw, No. 8-32 x ½"
27.	GD3860	-	O-Ring (If Applicable)
28.	GA2528	2	Switch, 3 Position Toggle, On-Off-On
29.	GA6978	2	Switch, 3 Position Toggle, Momentary On-Off-Momentary On
30.	GA6977	1-2	Switch, 2 Position Toggle, On-Off
31.	GA8731	1	Switch, Push Button W/Transformer
32.	GD9896	1	Mounting Bracket
33.	G10211	4	Washer, ¼" SAE
34.	GA6975	2	Knob
35.	GR1290	2	Cage Nut, ¼"-20
36.	G1K267	-	Console Cable Connector Kit, Includes: (1) 3-Pin Connector, (1) Cable Clamp, (3) Male Terminal Pins
37.	G1K268	-	Console Cable Connector Kit, Includes: (1) 3-Pin Connector, (1) Cable Clamp, (1) Lock Ring, (3) Female Terminal Pins
38.	GA7856	1	Power Lead Adapter
39.	GA8729	1	Wiring Harness W/Dust Cap And Power Cable
40.	G7633X	-	Backlit Control Console Assembly W/Mounting Brackets, Short Harness W/Dust Cap And Power Cable
41.	GD6291	-	Insulated Clamp, ⅜"
	GD13348	-	Insulated Clamp, 11/16"
42.	GD13310	-	Jumper, 7/16"
43.	GA9481	-	Jumper Wire W/Fork Terminal, 13"
	G10996	-	Fork Terminal
44.	GA6701	1	Single Amber Light Assembly
	GR1204	-	Amber Lens
	GR1206	-	Rubber Grommet (2)
	GR1207	-	Lamp Unit
	GR1208	-	Bulb
45.	G1K321	-	2-Pin Female Connector Kit (Black), Includes: (3) 2-Pin Female Housings, (6) Pin Contacts, (6) Seals
46.	G1K320	-	2-Pin Male Connector Kit (Black), Includes: (3) 2-Pin Male Housings, (6) Socket Contacts, (6) Seals
47.	GA9689	2	Work Light Assembly
48.	GD16046	2	Bracket
49.	G11159	1-2	T-Bolt Clamp, 3 ½" Stainless Steel
50.	GA10924	1	Wiring Harness, 348"

KINZE VISION® DISPLAY

(VI50/VI18/VI21/A12553/GR1838/GR1839/A12852/A12853)

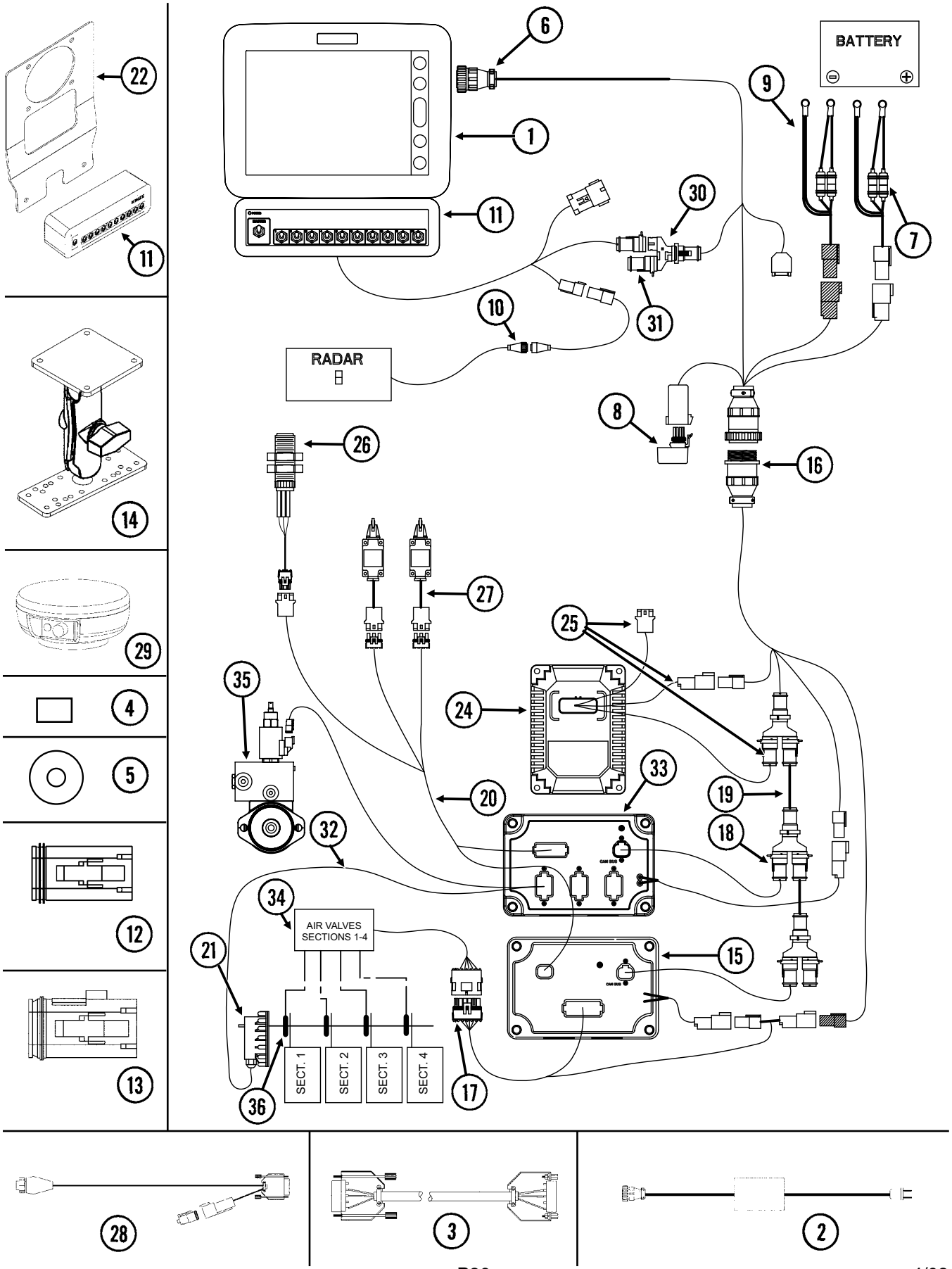

KINZE VISION® DISPLAY

ITEM	PART NO.	QTY.	DESCRIPTION
1.	*GA12536	1	Vision Display
2.	GA12852	1	Power Supply
3.	GA12853	1	Null Modem Cable
4.	GR1835	1	Flash Card
5.	GR1836	1	SMS CD
6.	GA12551	1	Display Cable
7.	GA12562	1	Power Cable
8.	GA12540	1	Power Control Relay
9.	GA12598	1	Seed Rate Power Cable
10.	GA12596	1	Radar Adapter Cable
11.	*GA12539	1	Switch Box Module
12.	GR1838	1	Dust Plug
13.	GR1839	1	Dust Plug
14.	GA12868	1	Mounting Bracket Assembly
	GD18407	1	Ram Base
	GD18408	1	Ram Vesa Base
15.	GA12537	1	Clutch Control Module
16.	GA12555	1	Implement Cable (12 Row)
	GA12655	-	Implement Cable (16 Row)
17.	GA12556	1	Seed Command Cable
18.	GA12558	1	Can Stub Cable, 8"
19.	GA12559	1	Can Extension, 5"
20.	GA12560	1	Implement Switch Extension Cable
21.	GA12565	1	Encoder Module
22.	GR1837	1	Switch Box Bracket
24.		-	See “Planter Monitor Module (PMM)”, Pages P88 And P89
25.		-	See “Planter Monitor Module (PMM)”, Pages P88 And P89
26.	GA13204	1	Hall Effect Sensor
27.	GA12561	2	Implement Switch Cable
28.	GA12553	1	GPS Cable
29.	GA12552	1	GPS Antenna
30.	GD18176	-	Y-Splice Connector
31.	GD18177	-	Terminator
32.	GA12568	1	Seed Rate Cable
33.	GA12564	1	Seed Rate Module
34.		-	See “Center Frame”, Pages P44 And P45
35.		-	See “Valve Block - Located On L.H. Rear Center Frame”, Pages P74 And P75
36.		-	See “Parallel Arms, Mounting Support Plate And Quick Adjustable Down Force Springs Option”, Pages P10 And P11 And “Interplant Push Row Unit”, Pages P34 And P35

PLANTER MONITOR MODULE (PMM)

(MTR60/MTR63/PMM01/MTR65/MTR61/MTR64/MTR62/PMM02)

Shaft Rotation Sensor

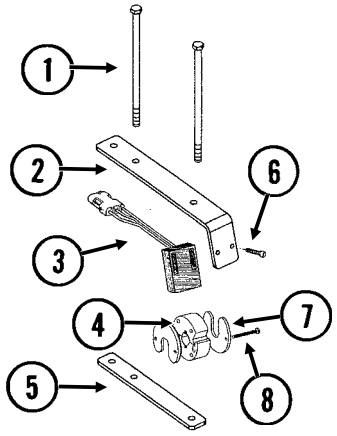

Magnetic Distance Sensor (MDS)

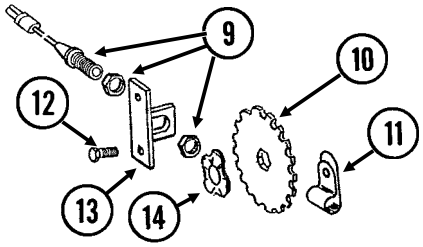

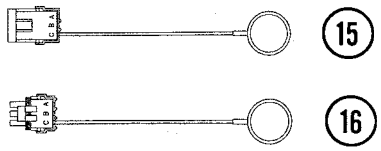

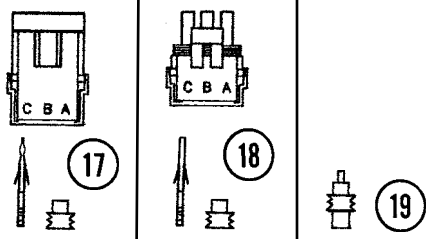

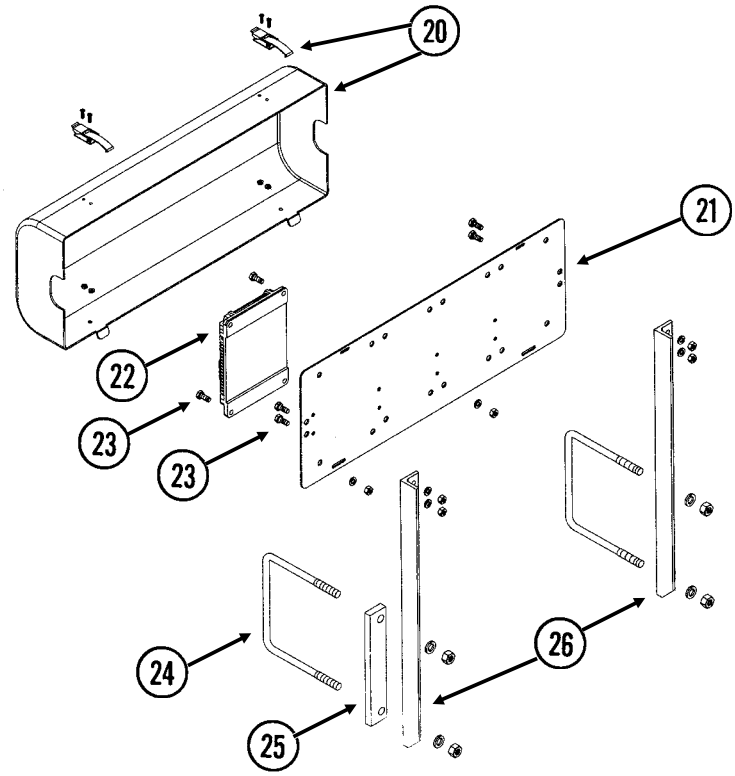

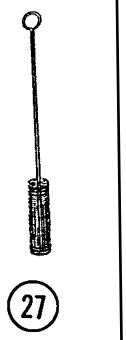

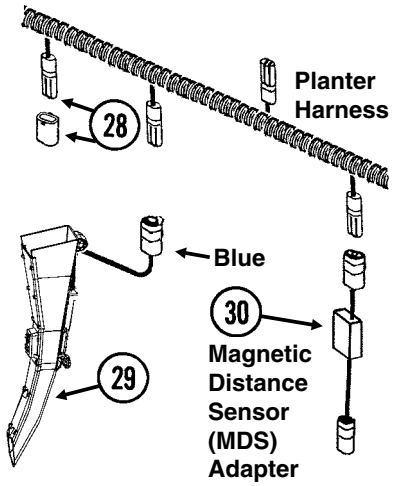

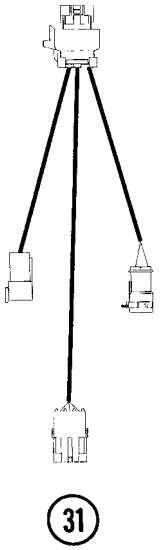

NOTE: See KINZE Vision® Planter Control System Display Operator Manual (M0214) and associated cab harness components.

ITEM	PART NO.	QTY.	DESCRIPTION
1.	G10686	4	Hex Head Cap Screw, ⅜"-16 x 8"
	G10229	4	Lock Washer, ⅜"
	G10101	4	Hex Nut, ⅜"-16
2.	GD18118	2	Shaft Sensor Mount
3.	GR1415	2	Rotation Sensor

PLANTER MONITOR MODULE (PMM)

ITEM	PART NO.	QTY.	DESCRIPTION
4.	GR1414	2	Actuator
5.	GD18168	2	Mount
6.	G11288	4	Pan Head Screw, No. 10-32 x 1 ¼"
	G10243	4	Washer, No. 10 SAE
	G10758	4	Hex Nut, No. 10-32
7.	GD11474	2	Cover
8.	G10927	2	Pan Head Machine Screw, No. 8-32 x 1 ¼", Stainless Steel
	G10931	2	Lock Washer, No. 8, Internal/External, Stainless Steel
	G10928	2	Hex Nut, No. 8-32, Stainless Steel
9.	GA5600	1	Magnetic Distance Sensor
10.	GD8751	-	Magnetic Distance Sensor Pulse Wheel
11.	GD6291	-	Insulated Clamp, ⅜"
12.	G10001	2	Hex Head Cap Screw, ⅜"-16 x 1"
	G10229	2	Lock Washer, ⅜"
	G10101	2	Hex Nut, ⅜"-16
13.	GD8770	1	Bracket
14.	GD8771	1	Spring Wave Washer
15.	GA8046	-	Dust Plug (Black)
	GA9978	-	Dust Plug (Blue)
16.	GA8047	-	Dust Plug (Black)
	GA9979	-	Dust Plug (Blue)
17.	G1K248	-	3-Pin Female Connector Kit (Black), Includes: (3) 3-Pin Female Housings, (9) Pin Contacts, (9) Seals
	G1K362	-	3-Pin Female Connector Kit (Blue), Includes: (3) 3-Pin Female Housings, (9) Pin Contacts, (9) Seals
18.	G1K252	-	3-Pin Male Connector Kit (Black), Includes: (3) 3-Pin Male Housings, (9) Socket Contacts, (9) Seals
	G1K363	-	3-Pin Male Connector Kit (Blue), Includes: (3) 3-Pin Male Housings, (9) Socket Contacts, (9) Seals
19.	GD11089	-	Sealing Plug
20.	GA12563	1	Module Cover Assembly W/Lock Clamps
	GA12641	-	Lock Clamp
	G11065	-	Phillips Pan Head Machine Screw, No. 8-32 x ⅝", Stainless Steel
	G11241	-	Serrated Flange Nut
21.	GD18013	1	Bracket
22.	GA12538	1	Planter Monitor Module
23.	G10043	6	Hex Head Cap Screw, 5⁄16"-18 x ¾"
	G10232	6	Lock Washer, 5⁄16"
	G10106	6	Hex Nut, 5⁄16"-18
24.	GD11721	2	U-Bolt, 5" x 7" x ½"-13
	G10228	4	Lock Washer, ½"
	G10102	4	Hex Nut, ½"-13
25.	GD16316	1	Spacer, 1½" x 9"
26.	GD16315	2	Support, 21 ½"
27.	GR0594	-	Brush
28.	GA7851	-	Planter Harness W/Dust Caps, 12 Row (16 Connectors)
	GA7852	-	Planter Harness W/Dust Caps, 16 Row (20 Connectors)
	GD11993	-	Dust Cap
29.	GA10901	-	Seed Tube W/Computerized Sensor
	GR1629	-	Sensor Only
	GA10940	-	Seed Tube (With Holes For Sensor Installation)
30.	GA7859	1	Magnetic Distance Sensor Adapter (Analog To Digital)
31.	GA12557	1	Planter Monitor Cable
A.	GA6147	-	Magnetic Distance Sensor And Mounting Package (Items 9-14)

INTERPLANT® PUSH ROW UNIT DRIVE

(RU134/TWL516)

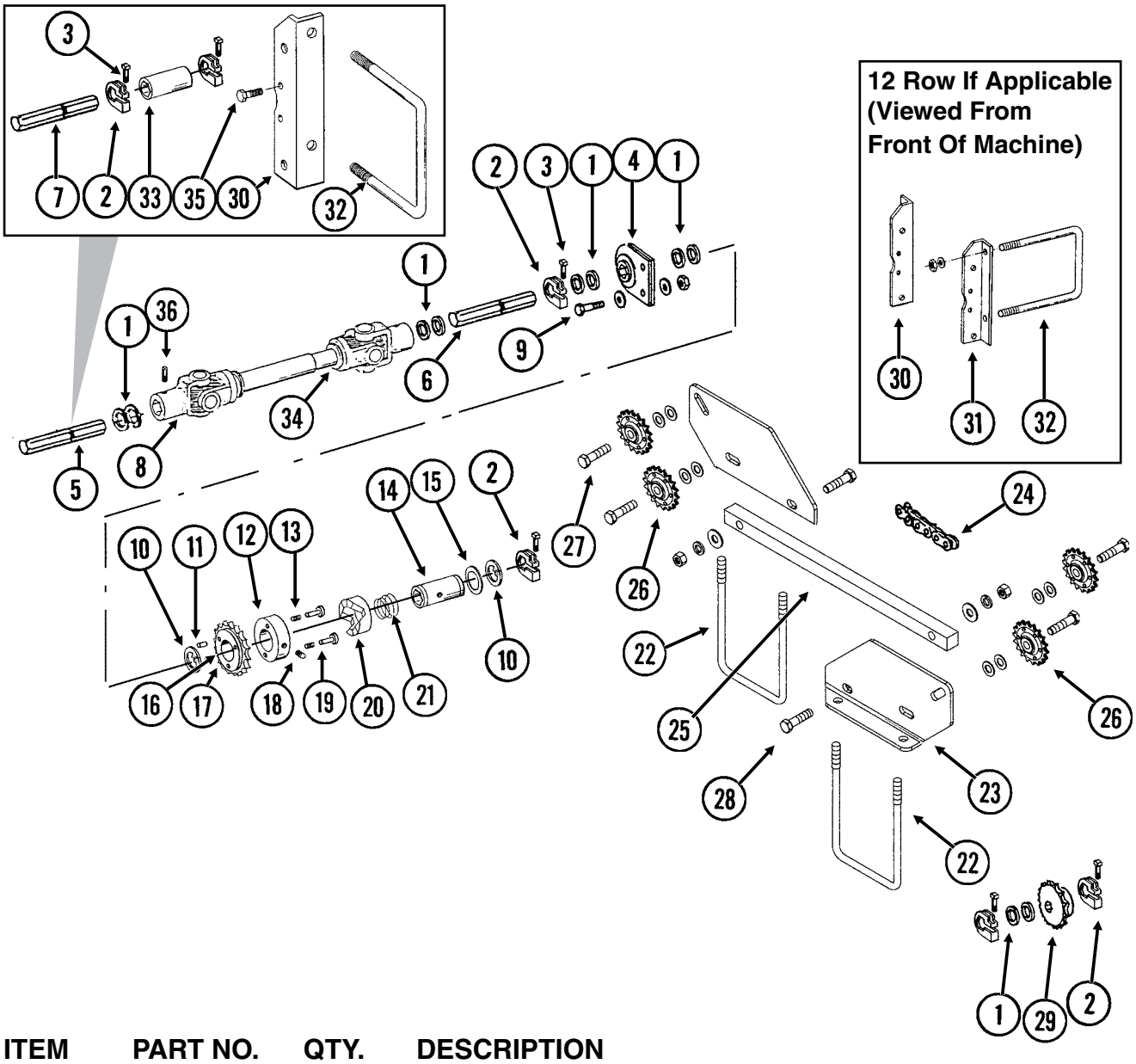

ITEM	PART NO.	QTY. (Per Side)	DESCRIPTION
1.	G10233	-	Machine Bushing, 1", 10 Gauge (As Required)
2.	GD11045	-	Lock Clamp
3.	G10130	-	Square Head Machine Bolt, 5⁄16"-18 x 1 3⁄4"
	G10923	-	Flange Nut, 5⁄16"-18, No Serration
4.	GA2180	-	Hanger Bearing, 7⁄8" Hex Bore
5.	GD0914-48	-	Hex Shaft, 7⁄8" x 48" (No Holes), R.H. Side
	GD0914-66	-	Hex Shaft, 7⁄8" x 66" (No Holes), L.H. Side
6.	GD0914-90	-	Hex Shaft, 7⁄8" x 90" (No Holes), Both Sides, 12 Row
	GD0914-124	-	Hex Shaft, 7⁄8" x 124" (No Holes), R.H. Side, 16 Row
	GD0914-138	-	Hex Shaft, 7⁄8" x 138" (No Holes), L.H. Side, 16 Row
7.	GD0914-24	-	Hex Shaft, 7⁄8" x 24" (No Holes), 12 Row W/Even-Row Push Row Unit
	GD0914-33	-	Hex Shaft, 7⁄8" x 33" (No Holes), 16 Row W/Even-Row Push Row Unit
8.	GA7052	-	U-Joint W/Grease Fitting, Female, 10 1⁄4" Long
	GR1557	-	Grease Fitting, 45°, Metric
	GR1297	-	Inboard Yoke And Outer Profile (10 1⁄4" U-Joint)
	GR1298	-	Inboard Yoke And Outer Profile (18 1⁄8" U-Joint)
	GR1294	-	Cross And Bearing Kit
	GR1293	-	Yoke, 7⁄8" Hex

INTERPLANT® PUSH ROW UNIT DRIVE

ITEM	PART NO.	QTY. (Per Side)	DESCRIPTION
9.	G10004	-	Hex Head Cap Screw, ⅜"-16 x 1 ¼"
	G10210	-	Washer, ⅜" USS
	G10229	-	Lock Washer, ⅜"
	G10101	-	Hex Nut, ⅜"-16
10.	G10496	2	External Inverted Snap Ring, 1 ½"
11.	G10968	1	Spring Pin, 5⁄32" x 7⁄16"
12.	GR1405	1	Lock Collar
13.	GR1413	1	Spring
14.	GR1407	1	Drive Shaft
15.	GR1411	1	Shim
16.	GR1406	1	Bushing
17.	GR1412	1	Sprocket, 19 Tooth
18.	G10535	1	Hex Socket Set Screw, ⅜"-16 x ¾"
19.	GR1410	1	Pin
20.	GR1409	1	Knurled Collar
21.	GR1408	1	Compression Spring
22.	GD8306	2	U-Bolt, 7" x 5" x ½"-13
	G10228	4	Lock Washer, ½"
	G10102	4	Hex Nut, ½"-13
23.	GD18094	2	Plate (Shown)
	GD18066	-	Plate
24.	G3310-226	1	Chain, No. 40, 226 Pitch Including Connector Link
	GR0912	-	Connector Link, No. 40
25.	GD18067	1	Brace
26.	GA7154	4	Sprocket W/Bearing, 18 Tooth
27.	G10016	4	Hex Head Cap Screw, ½"-13 x 2"
	G10206	8	Washer, ½" SAE
	G10228	4	Lock Washer, ½"
	G10102	4	Hex Nut, ½"-13
28.	G10016	2	Hex Head Cap Screw, ½"-13 x 2"
	G10216	2	Washer, ½" USS
	G10228	2	Lock Washer, ½"
	G10102	2	Hex Nut, ½"-13
29.	GA5107	2	Sprocket, 19 Tooth
30.	GD11972	-	Support Angle, R.H.
31.	GD11973	-	Support Angle, L.H.
32.	GD1113	-	U-Bolt, 5" x 7" x ⅝"-11
	G10230	-	Lock Washer, ⅝"
	G10104	-	Hex Nut, ⅝"-11
33.	GD1719	-	Coupler, 4"
34.	GA7051	1	U-Joint W/Grease Fitting, Male, 12 ¼" Long
	GR1557	-	Grease Fitting, 45°, Metric
	GR1296	-	Inner Profile
	GR1295	-	Inboard Yoke
	GR1301	-	Spring Pin, 8mm x 50mm
	GR1294	-	Cross And Bearing Kit
	GR1293	-	Yoke, ⅞" Hex
35.	G10752	-	Hex Head Cap Screw, ⅝"-18 x 2 ¼"
	GD7805	-	Special Washer, ⅝", Hardened
	G10412	-	Lock Nut, ⅝"-18
36.	G10688	-	Square Head Set Screw, ⅜"-16 x ⅝"
A.	GA8092	-	Clutch Sprocket Assembly, 19 Tooth (Items 10-21)
B.	G1K269	-	Lock Clamp Kit (Items 2 And 3)
C.	G1K331	-	Clutch Sprocket Kit (Items 11, 16 And 17)

DOUBLE DISC FERTILIZER OPENER AND MOUNT

FOC007(PT25e/TWL34a/FRTZ208)

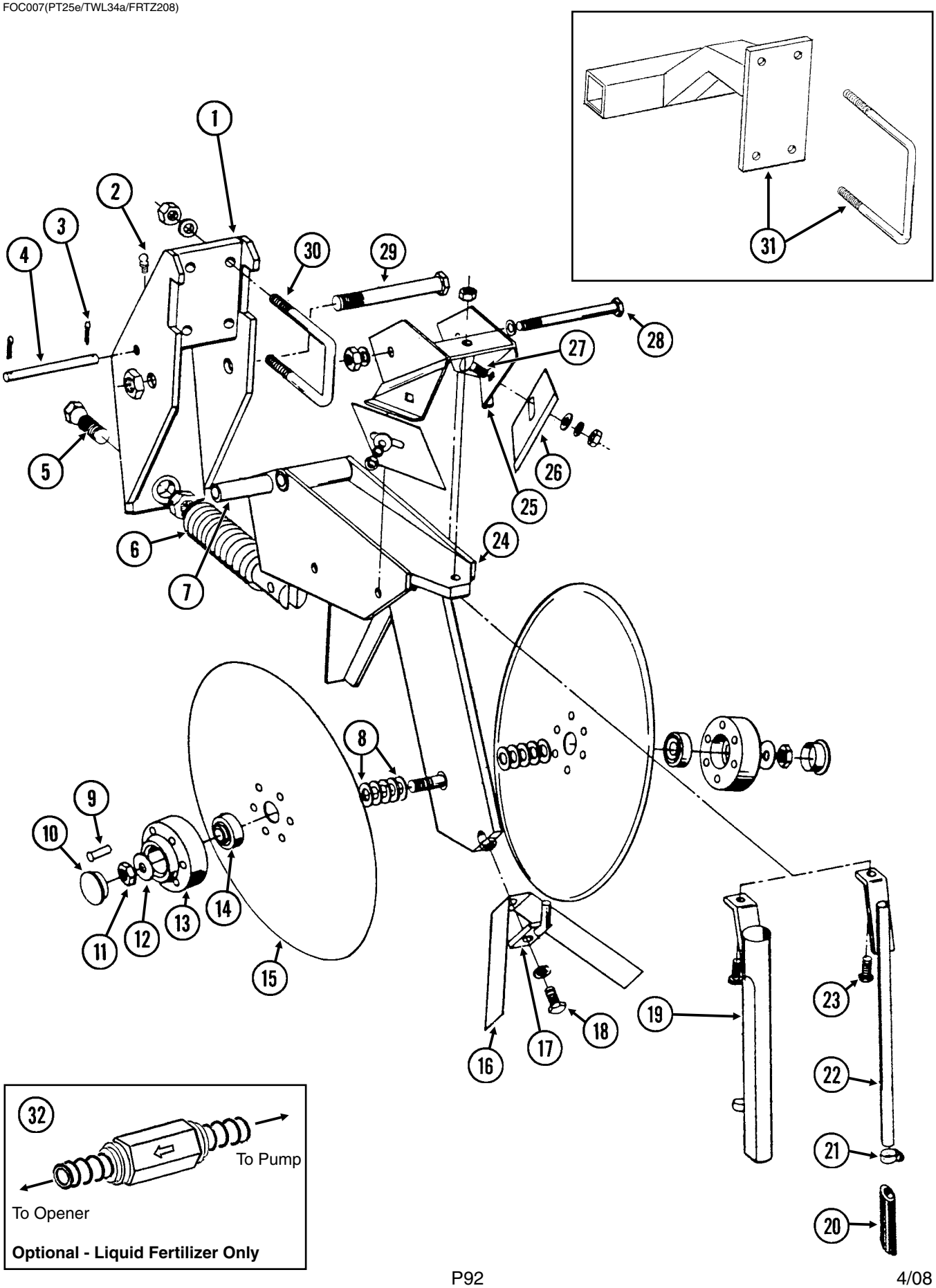

DOUBLE DISC FERTILIZER OPENER AND MOUNT

ITEM	PART NO.	QTY. (Per Assy.)	DESCRIPTION
1.	GA8483	1	Bracket
2.	G10938	1	Grease Fitting, ¼"-28, Taper Threads
3.	G10451	2	Cotter Pin, ⅛" x 1"
4.	GD1657	1	Lockup Pin
5.	GD0962	1	Hex Head Adjusting Bolt, ⅝"-18 x 3 ¼"
	G10499	1	Hex Jam Nut, ⅝"-18, Grade 2
6.	GA0328	1	Spring
7.	GD0487	1	Bushing, 41⁄64" I.D. x 3 ½" Long
8.	G10213	-	Machine Bushing, ⅝" (.030" Thick)
9.	G10542	12	Rivet, ¼" x 1 5⁄16"
10.	GD1132	2	Dust Cap
11.	G10503	1	Hex Jam Nut, ⅝"-11, Grade 2
	G10504	1	Hex Jam Nut, ⅝"-11, L.H. Threads, Grade 2
12.	G10204	2	Special Machine Bushing, ⅝" x 1" O.D.
13.	GB0134	2	Hub
14.	GA2014	2	Bearing
15.	GD11306	2	Disc Blade, 3.5 mm x 15"
16.	GD2589	1	Inner Scraper
17.	GA0312	1	Mount
18.	G10019	1	Hex Head Cap Screw, 5⁄16"-18 x 1"
	G10232	1	Lock Washer, 5⁄16"
19.	GA1369	-	Drop Tube, Dry Fertilizer
20.	GD11705	-	Extension
21.	G10681	-	Hose Clamp, No. 6
22.	GA8685	-	Drop Tube, Liquid Fertilizer
23.	G10133	1	Hex Head Cap Screw, 5⁄16"-18 x 1 ½"
	G10221	1	Washer, 5⁄16" SAE
	G10109	1	Lock Nut, 5⁄16"-18, Grade 8
24.	GA9195	1	Shank
25.	GA0810	1	Scraper Mount
26.	GD1673	2	Scraper
27.	G10305	2	Carriage Bolt, ⅜"-16 x 1"
	G10210	2	Washer, ⅜" USS
	G10229	2	Lock Washer, ⅜"
	G10101	2	Hex Nut, ⅜"-16
28.	G10045	1	Hex Head Cap Screw, ½"-13 x 4 ½"
	G10111	1	Lock Nut, ½"-13
29.	G10046	1	Hex Head Cap Screw, ⅝"-11 x 5"
	G10107	1	Lock Nut, ⅝"-11
30.	GD1138	2	U-Bolt, 2 ½" x 2 ½" x ½"-13
	G10228	4	Lock Washer, ½"
	G10102	4	Hex Nut, ½"-13
31.	GA7135	1	Mount (One Per Opener) W/U-Bolts
	GD1113	2	U-Bolt, 5" x 7" x ⅝"-11
	G10230	4	Lock Washer, ⅝"
	G10104	4	Hex Nut, ⅝"-11
32.	GA8983	-	Check Valve, Low Rate
A.	GA8845	-	Disc Blade And Bearing Assembly (Items 9 And 13-15)

HD SINGLE DISC FERTILIZER OPENER (Soil Press Wheel)

(TWL35d/TWL35b)

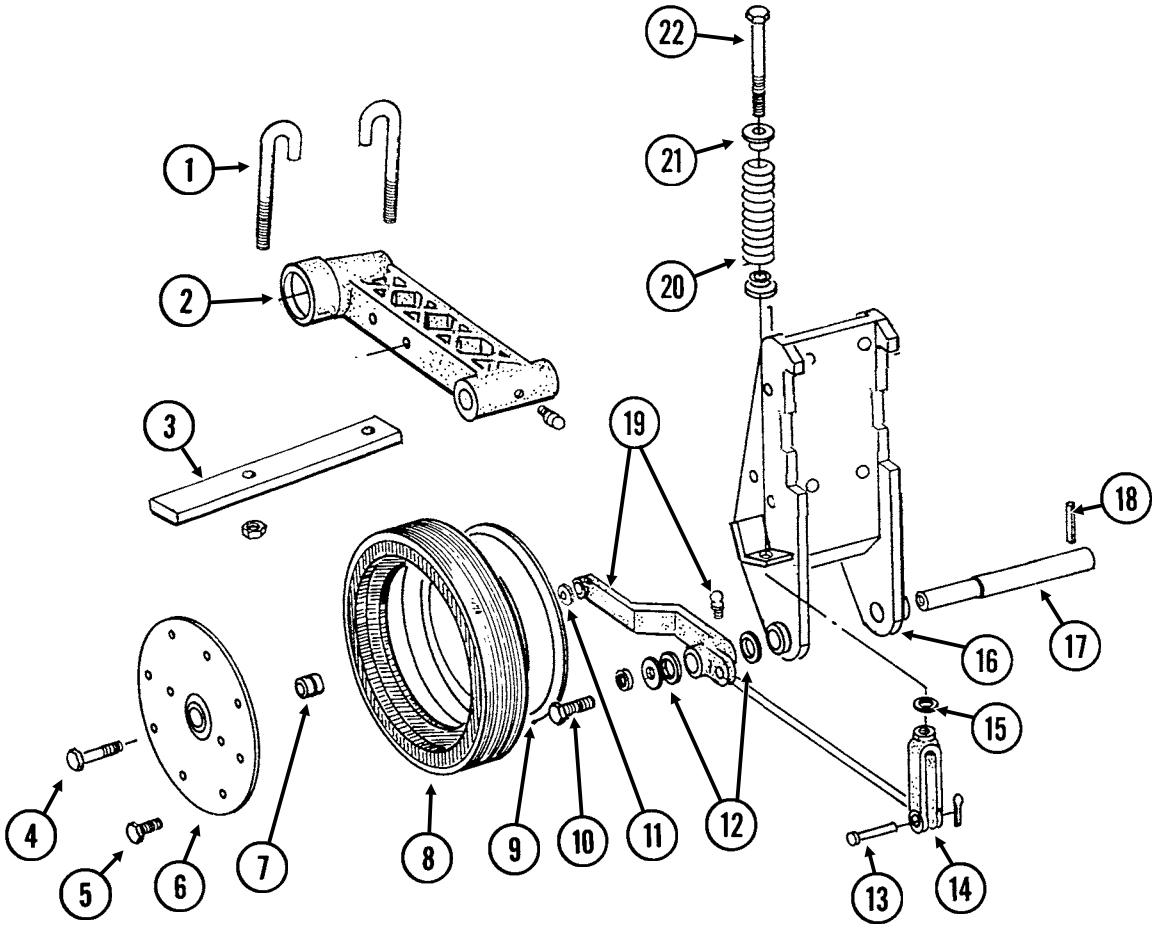

HD SINGLE DISC FERTILIZER OPENER (Soil Press Wheel)

ITEM	PART NO.	QTY. (Per Assy.)	DESCRIPTION
1.	GD9705	2	J-Bolt, ½"-13
	G10228	2	Lock Washer, ½"
	G10102	2	Hex Nut, ½"-13
2.		-	See “HD Single Disc Fertilizer Opener (Drop Tube)”, Pages P96 And P97
3.	GD9706	1	Lockup Bar
4.	G10010	1	Hex Head Cap Screw, ⅝"-11 x 3"
5.	G10961	11	Flanged Whiz Lock Screw, 5⁄16"-18 x ⅝", No Serration
	G10620	11	Serrated Flange Nut, 5⁄16"-18
6.	GD11954	1	Half Wheel Cover, Nylon
7.	GA6171	1	Bearing
8.	GD11953	1	Offset Tire
9.	GD11423	1	Half Wheel
10.	G10438	1	Hex Head Cap Screw, ½"-13 x ¾"
	G10228	1	Lock Washer, ½"
	G10216	1	Washer, ½" USS
11.	G10230	1	Lock Washer, ⅝"
12.	G10526	10	Machine Bushing, 1" (.048" Thick)
13.	G10560	1	Clevis Pin, ½" x 1 ¾"
	G10456	1	Cotter Pin, ⅛" x ¾"
14.	GD8218	1	Yoke
15.	G10205	1	Washer, ⅝" SAE
16.		-	See “HD Single Disc Fertilizer Opener (Drop Tube)”, Pages P96 And P97
17.	GD7911	1	Pivot Pin
18.	G10610	1	Spring Pin, ⅜" x 2"
19.	GA8306	-	Wheel Arm W/Grease Fitting, R.H.
	GA8305	1	Wheel Arm W/Grease Fitting, L.H. (Shown)
	G10640	1	Grease Fitting, ¼"-28
20.	GD8308	1	Spring
21.	GB0212	2	Spring Washer
22.	GD9709	1	Special Bolt
A.	G1K215	-	Lockup Kit (Items 1 And 3)
B.	GA8877	-	Gauge Wheel Complete (Items 5-9)

HD SINGLE DISC FERTILIZER OPENER (Drop Tube)

(PT27e/FRTZ208)

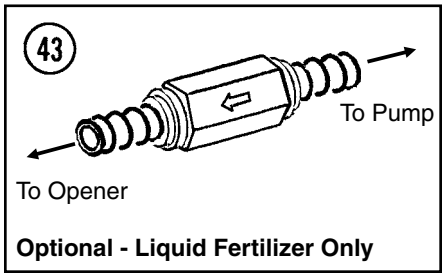

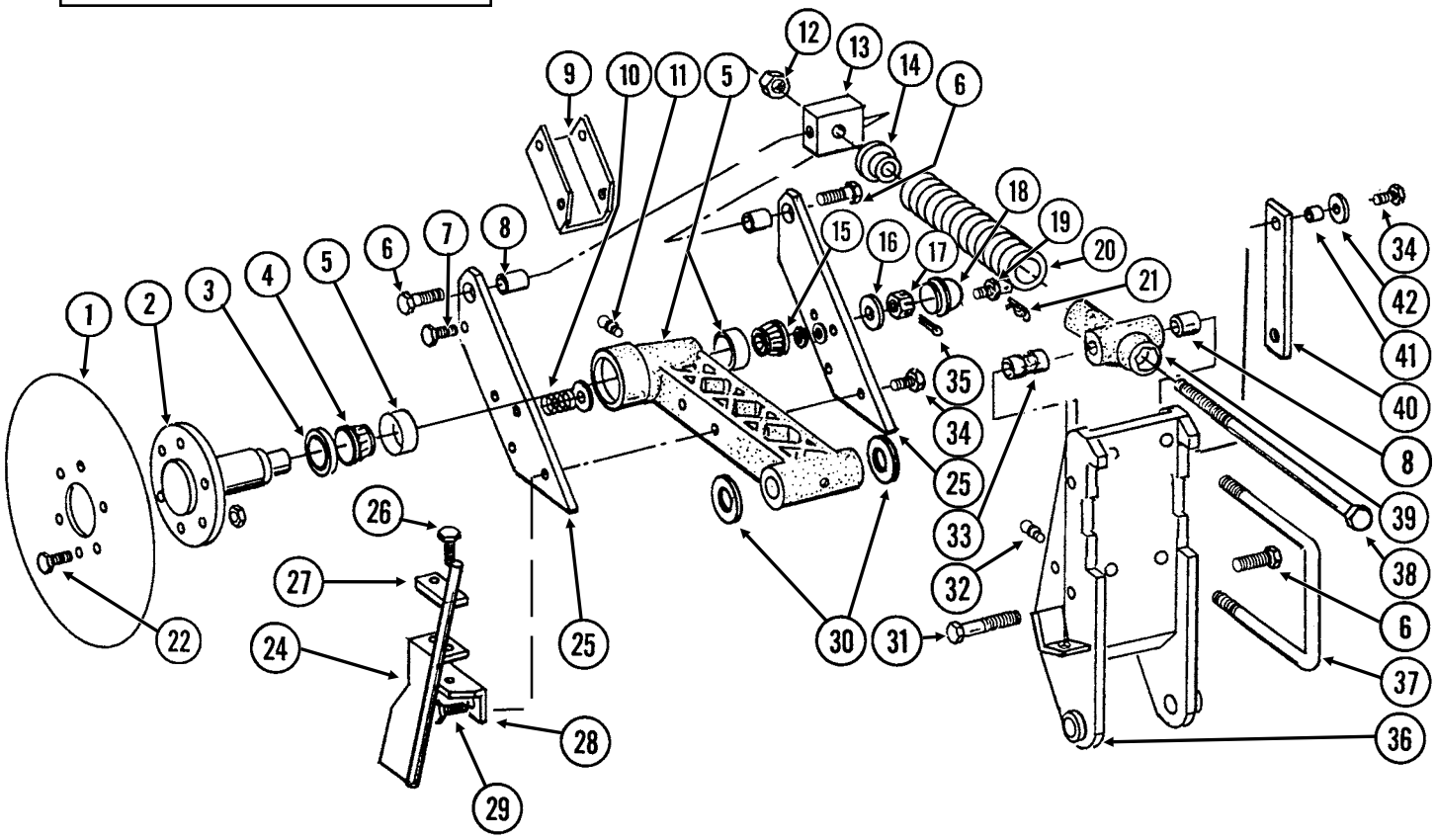

ITEM	PART NO.	QTY. (Per Assy.)	DESCRIPTION
1.	GD7900	1	Disc Blade, 18"
	GD8247	-	Disc Blade, 20" (Optional)
2.	GB0205	1	Spindle
3.	GA4286	1	Seal
4.	GA4287	1	Bearing
5.	GA5887	1	Arm W/Cups And Washers
	GD6553	-	Inner Cup
	GR0188	-	Outer Cup
	G10205	3	Washer, ⅝" SAE

HD SINGLE DISC FERTILIZER OPENER (Drop Tube)

ITEM	PART NO.	QTY. (Per Assy.)	DESCRIPTION
6.	G10007	3	Hex Head Cap Screw, ⅝"-11 x 1 ½"
7.	G10001	2	Hex Head Cap Screw, ⅜"-16 x 1"
	G10108	2	Lock Nut, ⅜"-16
8.	GB0218	3	Bushing, 21⁄32" I.D. x ⅞" O.D. x 19⁄32" Long
9.	GD8238	1	Channel
10.	GD7962	2	Spring
11.	G10641	2	Grease Fitting, ⅛" NPT
12.	G10105	3	Hex Nut, ¾"-10
13.	GD7908	1	Tap Block
14.	GB0213	1	Spring Seat
15.	GA0237	1	Bearing
16.	G10220	1	Machine Bushing, 1 1⁄16", 10 Gauge
17.	G10507	1	Slotted Nut, 1"-14
18.	GD1104	1	Dust Cap
19.	GD8276	1	Pin
	G10237	1	Lock Washer, 7⁄16"
	G10100	1	Hex Nut, 7⁄16"-14
20.	GD10273	1	Compression Spring
21.	G10592	1	Hair Pin Clip, No. 11
22.	G10594	6	Bolt, ½"-13 x 1 ½"
	G10111	6	Lock Nut, ½"-13
23.	G10049	2	Hex Head Cap Screw, ⅜"-16 x 2 ½"
	G10210	2	Washer, ⅜" USS
	G10108	2	Lock Nut, ⅜"-16
24.	GA8689	1	Drop Tube, L.H., Liquid Fertilizer (Shown)
	GA8688	-	Drop Tube, R.H., Liquid Fertilizer
25.	GD8224	2	Bar
26.	G10004	2	Hex Head Cap Screw, ⅜"-16 x 1 ¼"
	G10229	2	Lock Washer, ⅜"
27.	GD10487	1	Clamp
28.	GD10304	-	Angle, R.H.
	GD10303	1	Angle, L.H. (Shown)
29.	G10016	2	Hex Head Cap Screw, ½"-13 x 2"
	G10111	2	Lock Nut, ½"-13
30.	G10322	-	Machine Bushing, 1 ¼", 18 Gauge (As Required)
31.	G10862	1	Hex Head Cap Screw, ⅝"-11 x 3 ¼"
	G10205	2	Washer, ⅝" SAE
	G10230	1	Lock Washer, ⅝"
32.	G10640	1	Grease Fitting, ¼"-28
33.	GD10242	1	Bushing, 2 ¼"
34.	G10039	5	Hex Head Cap Screw, ½"-13 x 1 ¾"
	G10111	5	Lock Nut, ½"-13
35.	G10459	1	Cotter Pin, 3⁄16" x 1 ½"
36.	GA7240	-	Opener Mount, R.H.
	GA7239	1	Opener Mount, L.H. (Shown)
37.	GD1113	2	U-Bolt, 5" x 7" x ⅝"-11
	G10230	4	Lock Washer, ⅝"
	G10104	4	Hex Nut, ⅝"-11
38.	GD7907	1	Special Bolt
39.	GB0206	1	Rod Guide
40.	GD8239	1	Storage Strap
41.	GD7904-02	1	Sleeve, ½" x ½" Long
42.	G10216	3	Washer, ½" USS
43.	GA8983	-	Check Valve, Low Rate

NOTCHED SINGLE DISC FERTILIZER OPENER

(FRTZ208/B0405/TWL34e/TWL34g/FRTZ268/A12108)

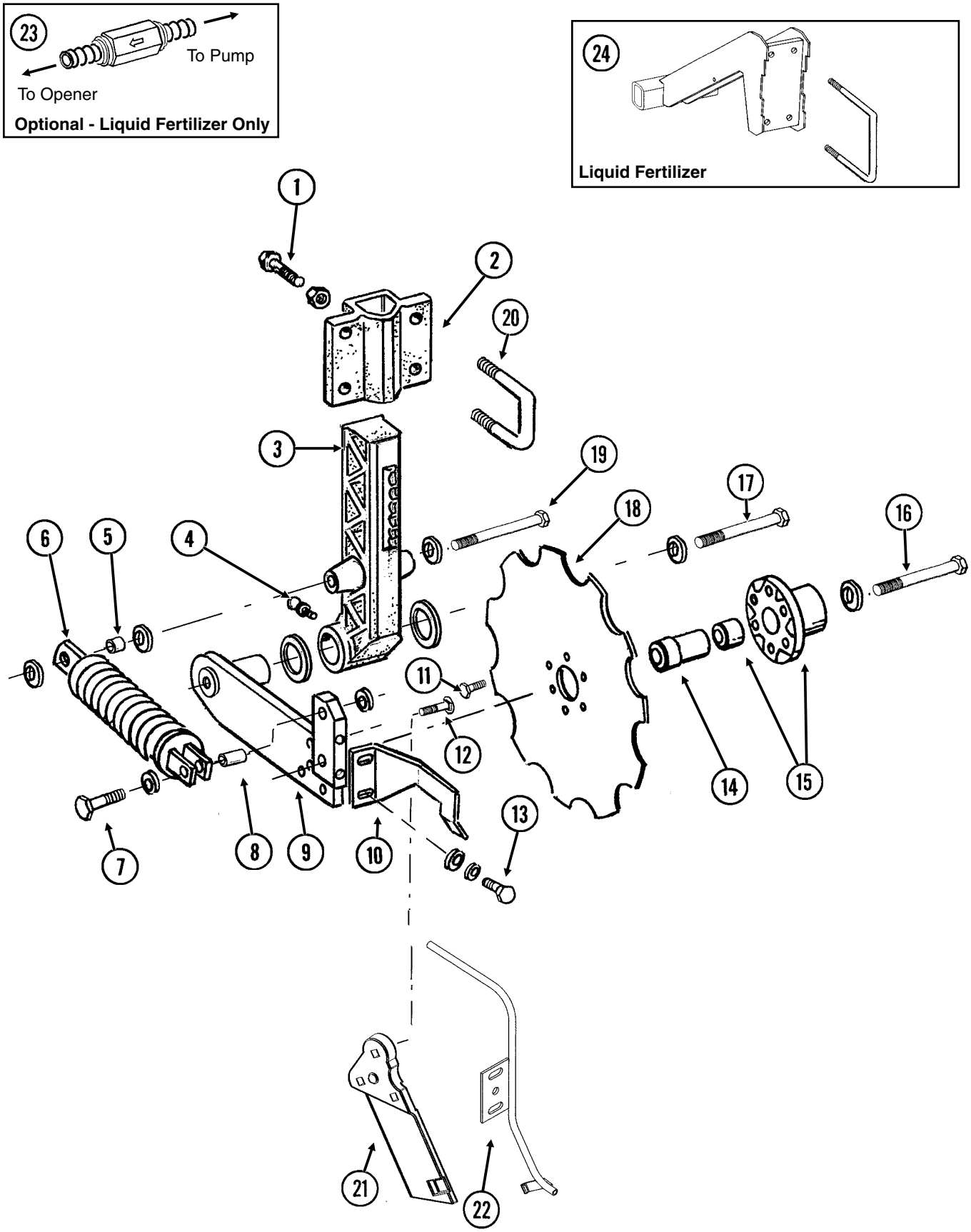

NOTCHED SINGLE DISC FERTILIZER OPENER

ITEM	PART NO.	QTY. (Per Assy.)	DESCRIPTION
1.	G10017	3	Hex Head Cap Screw, ½"-13 x 1 ½"
	G10102	3	Hex Nut, ½"-13
2.	GB0405	1	Mount, L.H. (Shown)
	GB0400	-	Mount, R.H.
3.	GB0296	1	Arm, 13 ½"
4.	G10640	1	Grease Fitting, ¼"-28
5.	GD12685	1	Bushing, ¾" O.D. x ½" Long
6.	GA6966	1	Compression Spring Assembly
7.	G10047	1	Hex Head Cap Screw, ⅜"-16 x 1 ¾"
	G10210	2	Washer, ⅜" USS
	G10108	1	Lock Nut, ⅜"-16
8.	GD1026	1	Sleeve, 1 3⁄16" Long
9.	GA9433	1	Pivot Arm, L.H. (Shown)
	GA9434	-	Pivot Arm, R.H.
10.	GD11557	1	Scraper, L.H. (Shown)
	GD11558	-	Scraper, R.H.
11.	G10002	6	Hex Head Cap Screw, ⅜"-16 x ¾"
12.	G10306	3	Carriage Bolt, ⅜"-16 x 2"
	G10108	3	Lock Nut, ⅜"-16
13.	G10991	2	Hex Head Cap Screw, 5⁄16"-18 x ⅞"
	G10232	2	Lock Washer, 5⁄16"
	G10219	2	Washer, 5⁄16" USS
14.	GD12679	1	Stepped Spacer, 3" Long
15.	GA9437	1	Hub W/Bearing
	GA8603	-	Double Row Bearing
16.	G10011	1	Hex Head Cap Screw, ⅝"-11 x 5 ½"
	GD12677	1	Washer, 1 ½" O.D., 7 Gauge, Hardened
	G10107	1	Lock Nut, ⅝"-11
17.	G10046	1	Hex Head Cap Screw, ⅝"-11 x 5"
	G10217	1	Washer, ⅝" USS
	G10450	2	Machine Bushing, 1 ½", 18 Gauge (As Required)
	G10107	1	Lock Nut, ⅝"-11
18.	GD12676	1	Disc Blade, Notched, 16 ¾"
19.	G10871	1	Hex Head Cap Screw, ½"-13 x 6"
	G10206	3	Washer, ½" SAE
	G10111	1	Lock Nut, ½"-13
20.	GD13287	2	U-Bolt, 1 ½" x 2 ½" x ½"-13
	G10228	4	Lock Washer, ½"
	G10102	4	Hex Nut, ½"-13
21.	GB0323	1	Knife, L.H. (Shown)
	GB0322	-	Knife, R.H.
22.	GA12108	1	Drop Tube, Liquid Fertilizer (Shown)
	GA12109	-	Drop Tube, Liquid Fertilizer
23.	GA8983	-	Check Valve, Low Rate
24.	GA9565	1	Mount W/U-Bolts, Liquid Fertilizer
	GD1113	2	U-Bolt, 5" x 7" x ⅝"-11
	G10230	4	Lock Washer, ⅝"
	G10104	4	Hex Nut, ⅝"-11

RESIDUE WHEEL ATTACHMENT FOR NOTCHED SINGLE DISC FERTILIZER OPENER

DFC024(FRTZ165I)

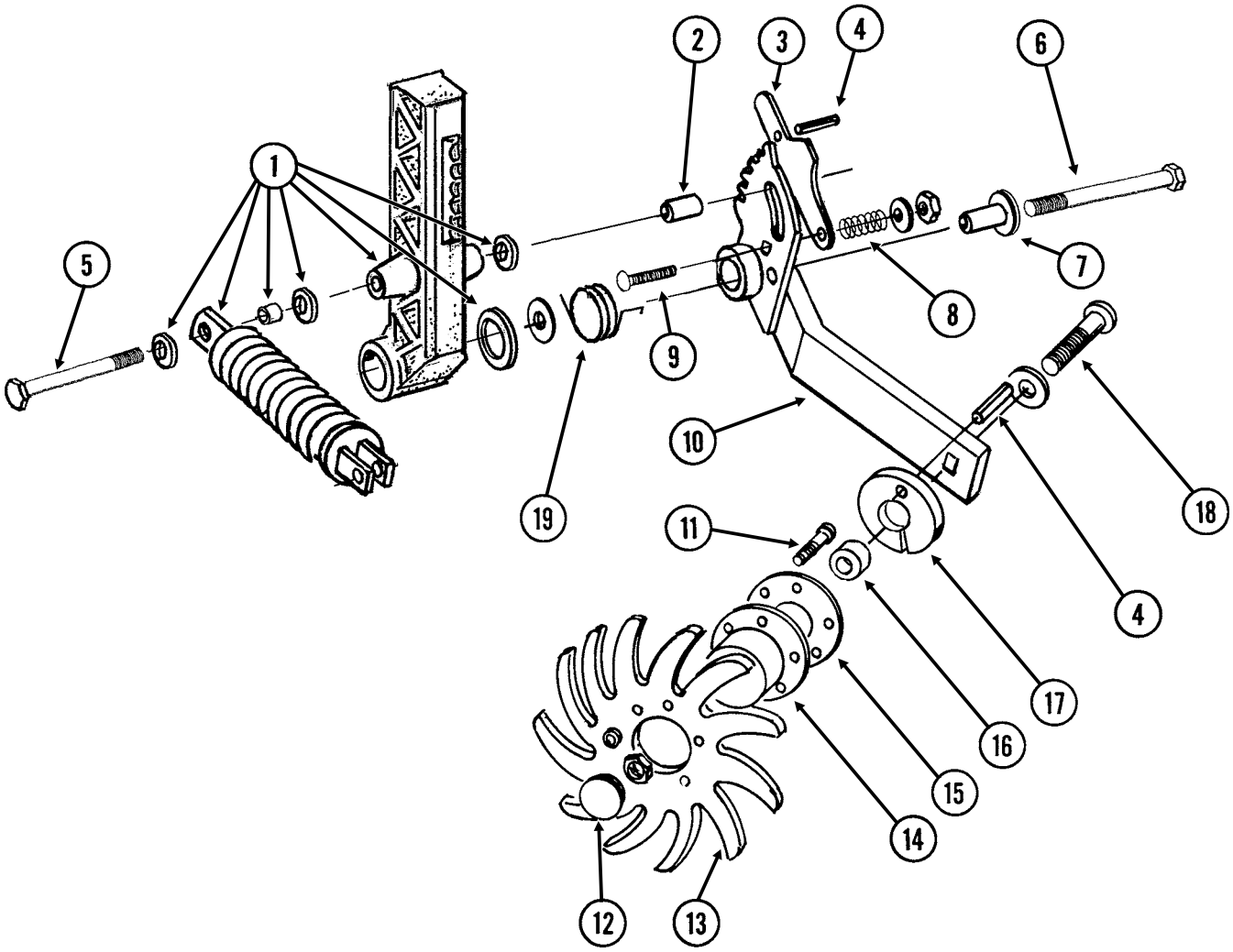

RESIDUE WHEEL ATTACHMENT FOR NOTCHED SINGLE DISC FERTILIZER OPENER

ITEM	PART NO.	QTY. (Per Assy.)	DESCRIPTION
1.		-	See “Notched Single Disc Fertilizer Opener”, Pages P98 And P99
2.	GD12684	1	Bushing, 1 ⅓" Long
3.	GD11178	1	Adjustment Lever
4.	G10603	2	Spring Pin, ¼" x 1 ¼"
5.	G11034	1	Hex Head Cap Screw, ½"-13 x 7"
	G10111	1	Lock Nut, ½"-13
6.	G10830	1	Hex Head Cap Screw, ⅝"-11 x 7 ½"
	GD7805	1	Special Washer, ⅝", Hardened
	G10107	1	Lock Nut, ⅝"-11
7.	GD11836	1	Sleeve, 2 ⅛" Long
8.	GD7962	1	Spring
9.	G10306	1	Carriage Bolt, ⅜"-16 x 2"
	G10203	1	Washer, ⅜" SAE
	G10108	1	Lock Nut, ⅜"-16
10.	GA7999	1	Mount W/Grease Fitting, L.H. (Shown)
	GA7998	-	Mount W/Grease Fitting, R.H.
	G10640	-	Grease Fitting, ¼"-28
11.	G10133	6	Hex Head Cap Screw, 5⁄16"-18 x 1 ½"
	G10109	6	Lock Nut, 5⁄16"-18, Grade 8
12.	GD1132	2	Dust Cap
13.	GD10552	2	Wheel, 12 Tine, ⅜" x 12"
14.	GA5654	1	Hub W/Bearings
	GA2014	-	Bearing
15.	GD9724	1	Backing Plate
16.	GD7817-04	1	Spacer, 11⁄16" I.D. x ½" Long
17.	GD11188	1	Spacer
18.	G10908	1	Carriage Bolt, ⅝"-11 x 3"
	G10503	1	Hex Jam Nut, ⅝"-11, Grade 2
19.	GD11265	1	Spring, L.H. (Shown)
	GD11266	-	Spring, R.H.
A.	GA7445	-	Wheel Assembly, 12 Tine, L.H. (Items 11 And 13-15)(Shown)
	GA7446	-	Wheel Assembly, 12 Tine, R.H. (Items 11 And 13-15)

DEPTH/GAUGE WHEEL ATTACHMENT FOR NOTCHED SINGLE DISC FERTILIZER OPENER

(FRTZ256)

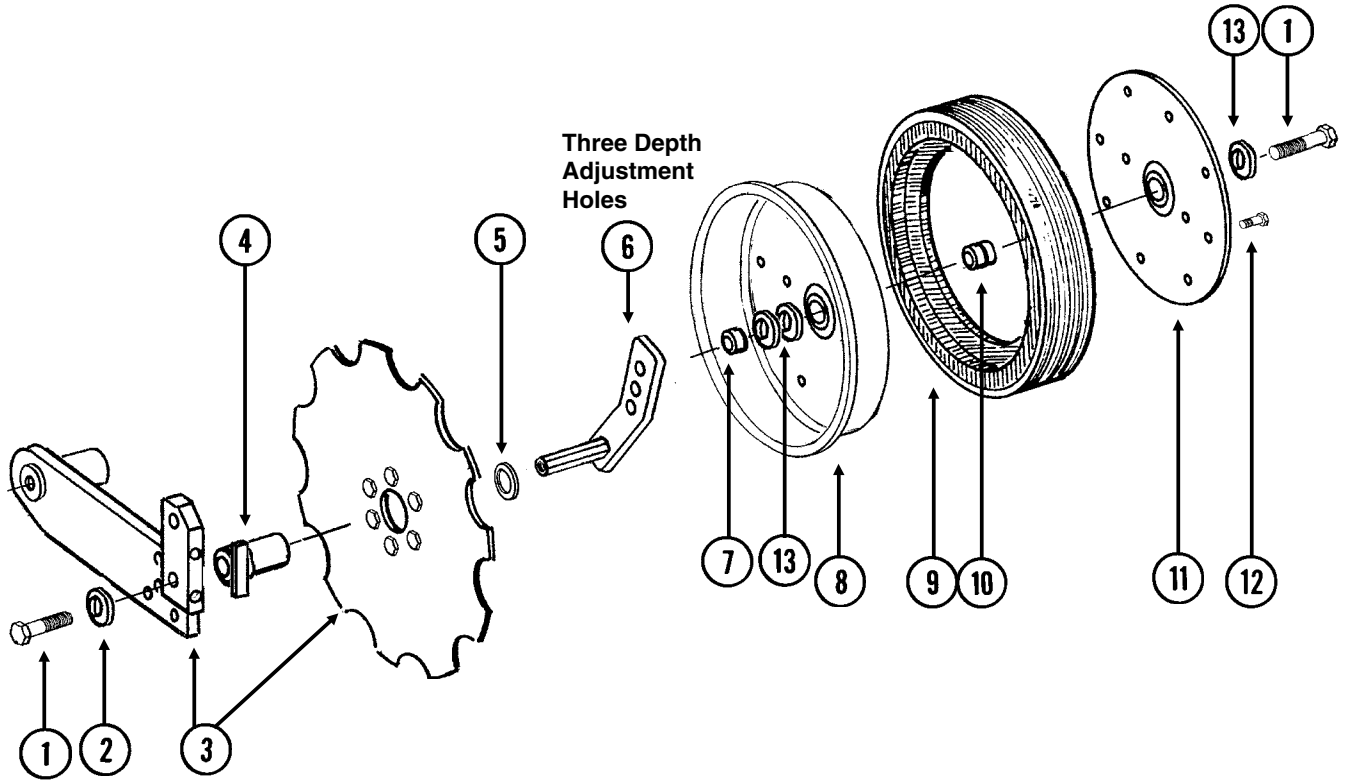

DEPTH/GAUGE WHEEL ATTACHMENT FOR NOTCHED SINGLE DISC FERTILIZER OPENER

ITEM	PART NO.	QTY. (Per Assy.)	DESCRIPTION
1.	G10010	2	Hex Head Cap Screw, ⅝"-11 x 3"
2.	GD7805	1	Special Washer, ⅝", Hardened
3.		-	See “Notched Single Disc Fertilizer Opener”, Pages P98 And P99
4.	GA9472	1	Blade Mount
5.	G10233	1	Machine Bushing, 1", 10 Gauge
6.	GA10037	1	Wheel Mount, L.H. (Shown)
	GA10036	1	Wheel Mount, R.H.
7.	GD13309	1	Spacer
8.	GD11423	1	Half Wheel
9.	GD11953	1	Offset Tire
10.	GA6171	1	Bearing
11.	GD11954	1	Half Wheel Cover, Nylon
12.	G10961	11	Flanged Whiz Lock Screw, 5⁄16"-18 x ¾", No Serration
	G10620	11	Serrated Flange Nut, 5⁄16"-18
13.	G10204	-	Special Machine Bushing, ⅝" x 1" O.D. (As Required)
A.	GA8877	-	Gauge Wheel Complete (Items 8-12)

LIQUID FERTILIZER TANKS, SADDLES, SADDLE MOUNTS AND HOSES

LFC021/LFC023/LFC030/LFC012(FRTZ201g)

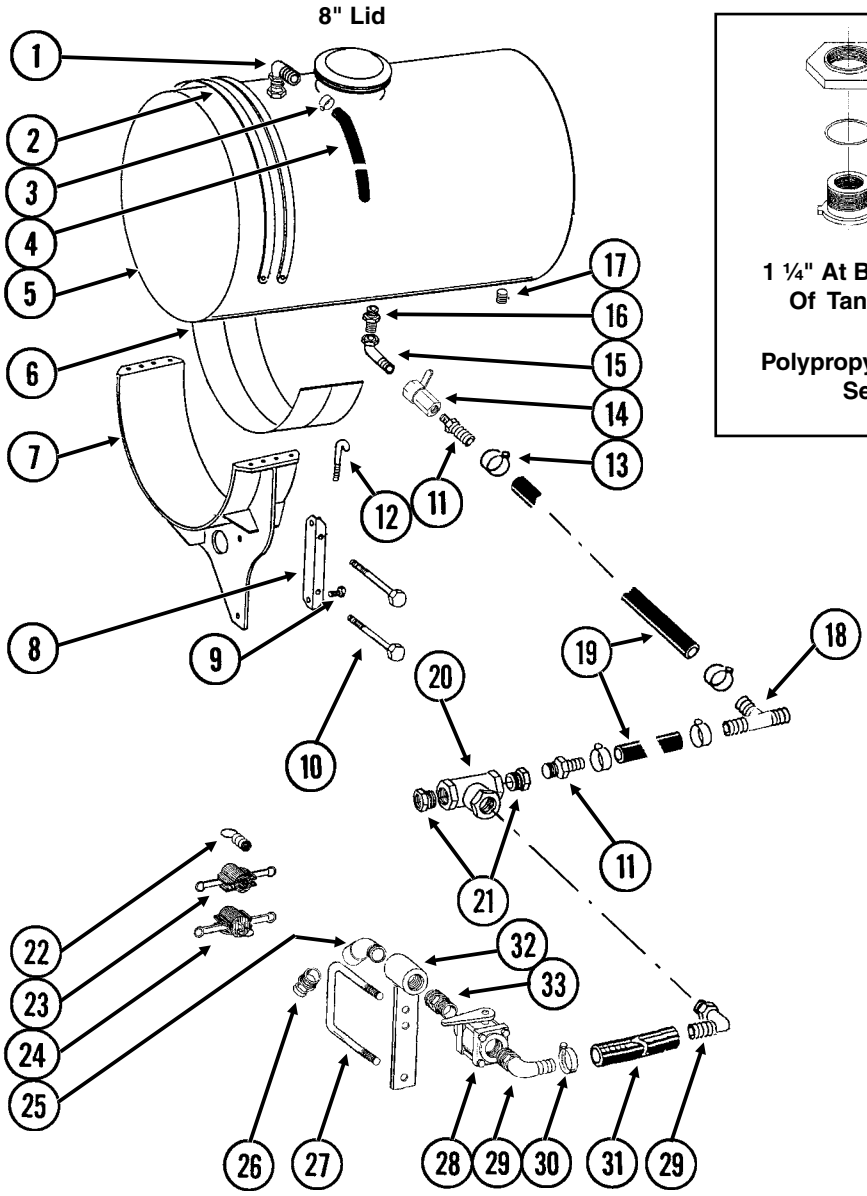

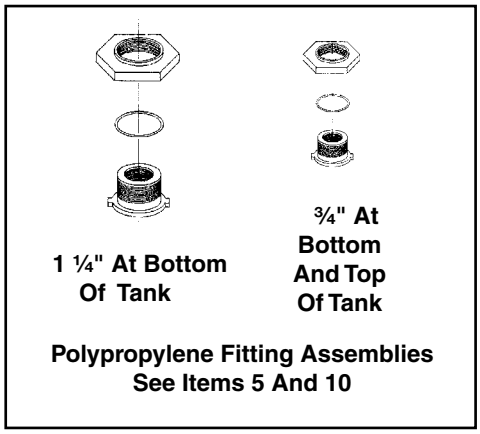

ITEM	PART NO.	QTY.	DESCRIPTION
1.	G10917	2	Elbow, 90°, ¾" NPT To Barb
2.	GD1520	-	Band, 30" (4 Per Tank)
3.	G10278	2	Hose Clamp, No. 16
4.	G4205-11	-	Hose, ¾" x 72" (One Per Tank)
5.	GA9905	4	Tank W/Lid And Fittings, 30" x 150 Gallon,
	GR1678	-	Lid W/Vent, 8" (Top Of Tank)
	GR0513	-	¾" Polypropylene Fitting Assembly (Overflow Fitting, Nut, Bushing And O-Ring) (Top And Bottom Of Tank)
	GR1397	-	Overflow Fitting
	GR0508		1 ¼" Polypropylene Fitting Assembly (Nut, Bushing And O-Ring) (Bottom Of Tank)

LIQUID FERTILIZER TANKS, SADDLES, SADDLE MOUNTS AND HOSES

ITEM	PART NO.	QTY.	DESCRIPTION
6.	GD1862	-	Pad, 8" x 14' (For Two 30" Tanks)
7.	GA7133	-	Tank Mount (2 Per Tank)
8.	GD10110	-	Mounting Angle (2 Per Tank)
9.	G10007	-	Hex Head Cap Screw, ⅝"-11 x 1 ½"
	G10230	-	Lock Washer, ⅝"
	G10104	-	Hex Nut, ⅝"-11
10.	G10342	-	Hex Head Cap Screw, ¾"-10 x 8"
	G10218	-	Washer, ¾" USS
	G10231	-	Lock Washer, ¾"
	G10105	-	Hex Nut, ¾"-10
11.	G10626	-	Adapter, 1 ¼" NPT To Barb
12.	GD1337	-	J-Bolt, 5⁄16"-18 (8 Per Tank)
	G11182	-	Lock Nut W/Nylon Insert, 5⁄16"-18, Grade 8 (8 Per Tank)
13.	G10674	-	Hose Clamp, No. 24
14.	GA4976	-	Shutoff Valve, 1 ¼" NPT
	GR1015	-	Body O-Ring
	GR1016	-	Stem O-Ring
	GR1017	-	Teflon Seat
	GR1018	-	Ball
	GR1019	-	Handle
15.	G10887	-	Elbow, 90°, 1 ¼" Male NPT To Female
16.	G10619	-	Close Nipple, 1 ¼" NPT
17.	G10096	-	Pipe Plug, ¾" NPT
18.	G10633	-	Tee, 1 ¼" Barb
19.	G4200-03	1	Hose, 1 ¼" x 32', 12 Row
	G4200-06	-	Hose, 1 ¼" x 40', 16 Row
20.	G10888	-	Tee, 2" Female NPT
21.	G10616	-	Reducing Bushing, 2" Male NPT To 1 ¼" Female
22.	GD10777	-	Dust Plug, 2" Male Cam Lock
23.	GD3622	-	Adapter, 2" Female NPT To Cam Lock
24.	GD3951	-	Dust Cap, 2" Cam Lock
25.	G10889	-	Elbow, 45°, 2" Male NPT To Female
26.	GD3623	-	Adapter, 2" Male NPT To Cam Lock
27.	GD1113	-	U-Bolt, 5" x 7" x ⅝"-11
	G10230	-	Lock Washer, ⅝"
	G10104	-	Hex Nut, ⅝"-11
28.	GA2660	-	Shutoff Valve, 2" NPT
29.	G10630	-	Elbow, 90°, 2" NPT To Barb
30.	G10676	-	Hose Clamp, No. 36, Stainless Steel
31.	G4201-02	-	Hose, 2" x 12', 8 Row
	G4201-03	-	Hose, 2" x 18', 12/16 Row
32.	GA7845	-	Quick Fill Mount, 2"
33.	G10623	-	Close Nipple, 2" NPT

LIQUID FERTILIZER PISTON PUMP MOUNT AND GROUND DRIVE WHEEL

(TWL317b)

48 Tooth Drive Sprocket And 18 Tooth Driven Sprocket

Model NGP-7055

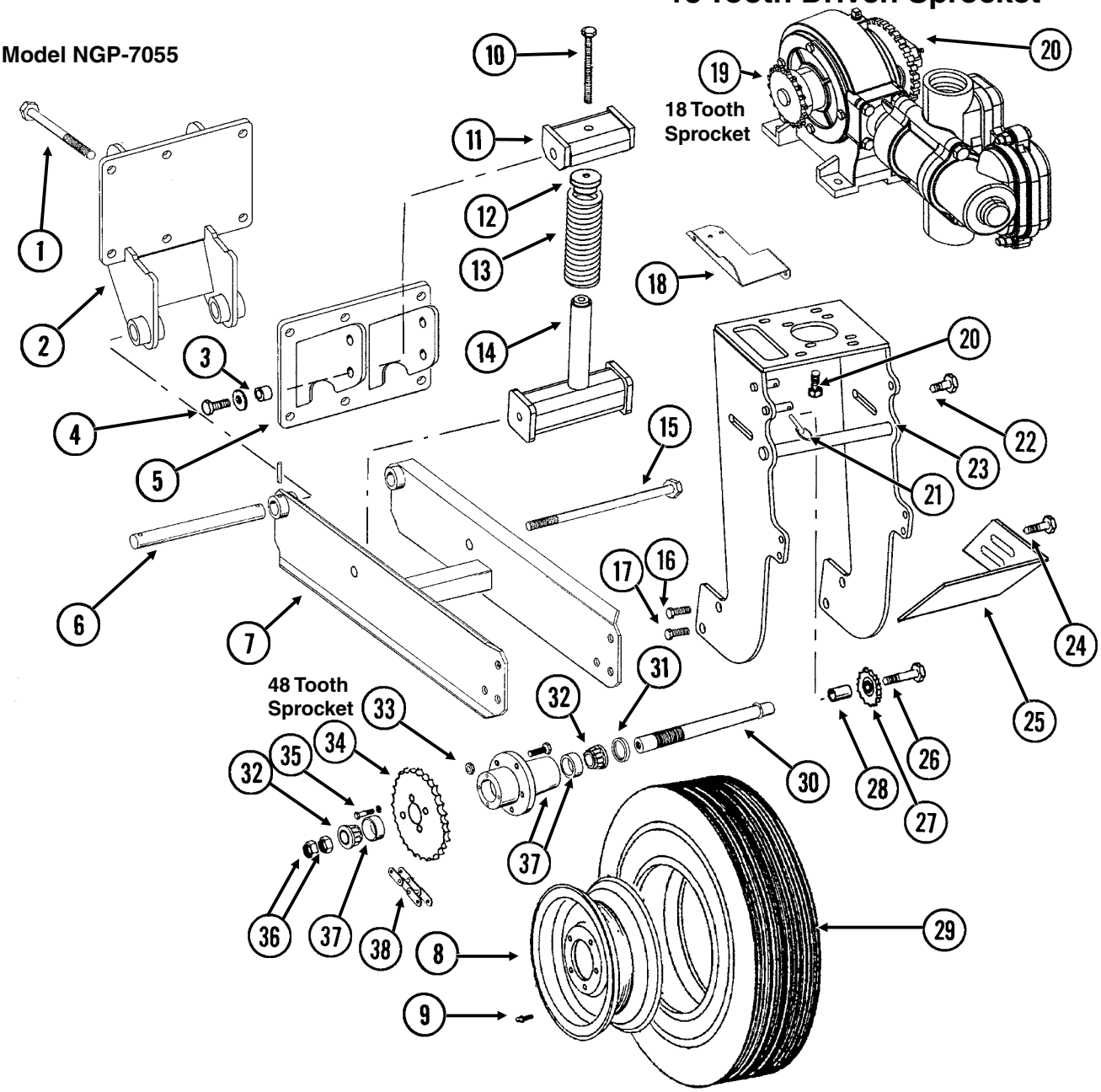

ITEM	PART NO.	QTY.	DESCRIPTION
1.	G10830	6	Hex Head Cap Screw, ⅝"-11 x 7 ½"
	G10230	6	Lock Washer, ⅝"
	G10104	6	Hex Nut, ⅝"-11
2.	GA10624	1	Wheel Arm Mount
3.	GB0218	2	Bushing, 21⁄32" I.D. x ⅞" O.D. x 19⁄32" Long
4.	G10005	2	Hex Head Cap Screw, ⅝"-11 x 1 ¾"
	GD7805	2	Special Washer, ⅝", Hardened
	G10107	2	Lock Nut, ⅝"-11
5.	GA10622	1	Spring Mount
6.	GD2681	1	Pin, 1 ¼" x 13 ½"
	G10460	2	Cotter Pin, ¼" x 2"

LIQUID FERTILIZER PISTON PUMP MOUNT AND GROUND DRIVE WHEEL

ITEM	PART NO.	QTY.	DESCRIPTION
7.	GA10621	1	Arm W/Grease Fittings
	G10641	2	Grease Fitting, ⅛" NPT
8.	GA0241	1	Wheel, 5" x 15"
9.	GD1166	1	Valve Stem
10.	G10012	1	Hex Head Cap Screw, ⅝"-11 x 6 ½"
	GD7805	1	Special Washer, ⅝", Hardened
11.	GA10908	1	Spring Mount
12.	GB0196	1	Washer
13.	GD7831	1	Compression Spring
14.	GA10907	1	Spring Guide
15.	G11122	1	Hex Head Cap Screw, ⅝"-11 x 12"
	G10107	1	Lock Nut, ⅝"-11
16.	G10026	2	Hex Head Cap Screw, ¾"-10 x 2"
	G10231	2	Lock Washer, ¾"
17.	G11042	2	Hex Head Cap Screw, ¾"-10 x 1 ¾"
	G10231	2	Lock Washer, ¾"
	G10105	2	Hex Nut, ¾"-10
18.	GD13744	1	Hose Holder
19.	GR1146	1	Sprocket, 18 Tooth
20.		-	See “Liquid Fertilizer Piston Pump”, Pages P110 And P111
21.	GD2558	1	Lynch Pin, ¼"
22.	G10007	2	Hex Head Cap Screw, ⅝"-11 x 1 ½"
	G10217	2	Washer, ⅝" USS
	G10230	2	Lock Washer, ⅝"
	G10104	2	Hex Nut, ⅝"-11
23.	GA10894	1	Pump Mount
24.	G10017	2	Hex Head Cap Screw, ½"-13 x 1 ½"
	G10216	2	Washer, ½" USS
	G10228	2	Lock Washer, ½"
	G10102	2	Hex Nut, ½"-13
25.	GD13328	1	Scraper
26.	G10013	1	Hex Head Cap Screw, ⅝"-11 x 3 ½"
	G10205	1	Washer, ⅝" SAE
	G10230	1	Lock Washer, ⅝"
	G10104	1	Hex Nut, ⅝"-11
27.	GA0262	1	Idler Sprocket W/Bearing, 15 Tooth
28.	GD7817-05	1	Spacer, 11⁄16" I.D. x 1 ¼" Long
29.	GD0844	1	Tire, 7.60" x 15", 8 Ply (Specify Brand*)
30.	GA2559	1	Spindle
31.	GA0252	2	Seal
32.	GA0251	2	Bearing
33.	GR0267	5	Lug Nut, ½"-20
34.	G2500-84	1	Sprocket, 48 Tooth
35.	G10019	4	Hex Head Cap Screw, 5⁄16"-18 x 1"
	G10232	4	Lock Washer, 5⁄16"
36.	GD0831	2	Shoulder Nut, 1 ¼"-12 UNF-2A
37.	GA0547	1	Hub W/Cups And Studs, 5 Bolt
	GR0190	2	Cup
	GR0204	5	Stud
38.	G3200-63	-	Chain, No. 2050, 63 Pitch Including Connector And Offset Link, Used With NGP-7075 Piston Pump
	GR0195	-	Connector Link, No. 2050
	GR0200	`-	Offset Link, No. 2050

*** Specific brand requests will be supplied only as available from current KINZE® Repair Parts stock. If a specific brand requested is not in stock, the brand available will be supplied. Different brand tires may have different diameters. Change in tire brand may affect rates. Field checks are recommended after any change in tires.**

LIQUID FERTILIZER FLOW DIVIDER MOUNT AND HOSES

(FRTZ280/FRTZ298)

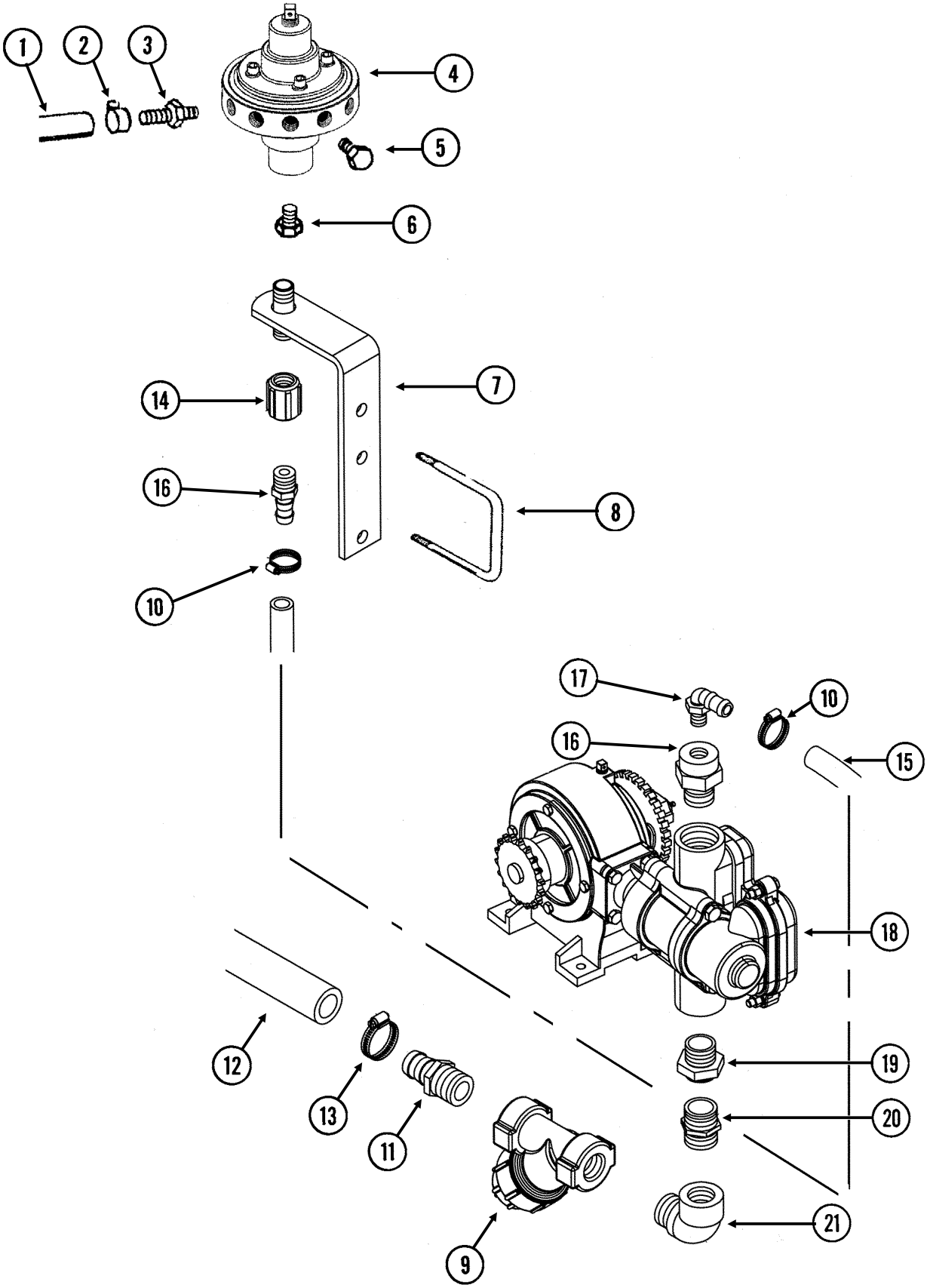

LIQUID FERTILIZER FLOW DIVIDER MOUNT AND HOSES

ITEM	PART NO.	QTY.	DESCRIPTION
1.	G4301-06	1	Hose, ⅜" x 160', 12 Row
	G4301-05	1-2	Hose, ⅜" x 120', 16 Row
2.	G10681	-	Hose Clamp, No. 6
3.	GD11700	-	Adapter, ¼" NPT To ⅜" Barb
4.		-	See “Liquid Fertilizer Piston Pump Flow Divider”, Pages P112 And P113
5.	G10292	-	Pipe Plug, ¼" NPT
6.	G10995	1	Reducing Bushing, 1" Male NPT To ¾" Female, Stainless Steel (If Applicable)
7.	GA6527	1	Mount, ¾" NPT
8.	GD1113	1	U-Bolt, 5" x 7" x ⅝"-11
	G10230	2	Lock Washer, ⅝"
	G10104	2	Hex Nut, ⅝"-11
9.	GA3893	1	Strainer Complete
	GR0880	-	Screen, No. 40 Mesh
	GR0881	-	Gasket
	GR0882	-	Y-Body
	GR0883	-	End Cap
10.	G10278	-	Hose Clamp, No. 16
11.	G10626	2	Adapter, 1 ¼" NPT To Barb
12.		-	See “Liquid Fertilizer Tanks, Saddles, Saddle Mounts And Hoses”, Pages P104 And P105
13.	G10674	2	Hose Clamp, No. 24
14.	G11083	1	Coupler, ¾" Female NPT
15.	G4205-10	-	Hose, ¾" x 200"
16.	G11237	1	Reducing Bushing, 1 ½" Male NPT To ¾" Female
17.	G10917	1	Elbow, 90°, ¾" NPT To Barb
18.		-	See ”Liquid Fertilizer Piston Pump”, Pages P110 And P111
19.	G10615	1	Reducing Bushing, 1 ½" Male NPT To 1 ¼" Female
20.	G10619	1	Close Nipple, 1 ¼" NPT
21.	G10887	1	Elbow, 90°, 1 ¼" Male NPT To Female

LIQUID FERTILIZER PISTON PUMP
Uses 18 Tooth Sprocket

(A12335a/GR1808)

Model NGP-7055

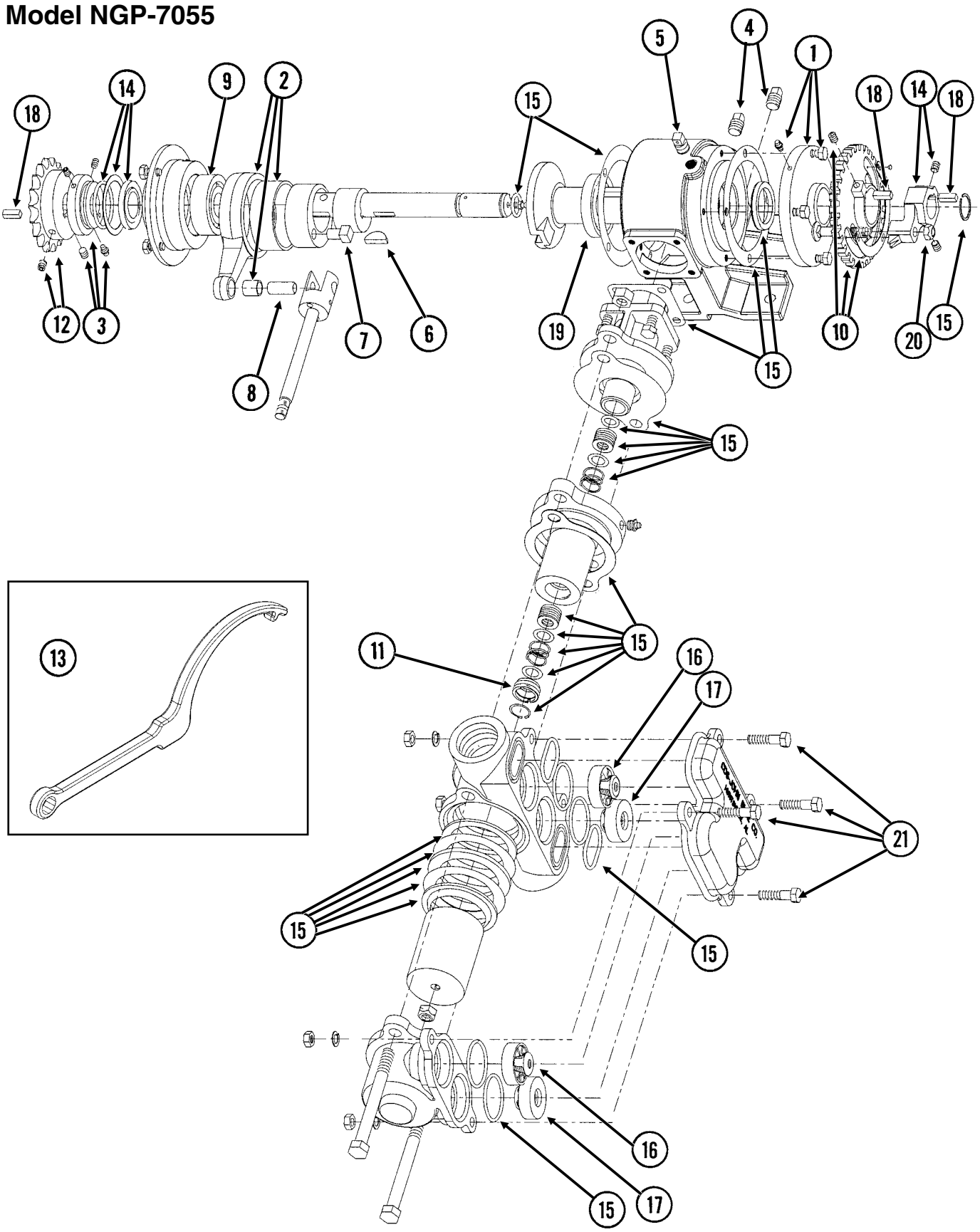

LIQUID FERTILIZER PISTON PUMP
Uses 18 Tooth Sprocket

ITEM	PART NO.	QTY.	DESCRIPTION
1.	GR1804	1	Flange Cover Assembly
	G10991	4	Hex Head Cap Screw, 5⁄16"-18 x 7⁄8"
2.	GR1803	1	Connecting Rod Assembly
3.	GR1801	1	Spacer Assembly
	G10693	3	Hex Socket Head Set Screw, 5⁄16"-18 x 3⁄8"
4.	GR1123	2	Plug
5.	GR1543	1	Vent Plug
6.	GR1112	1	Woodruff Key
7.	GR1120	1	Eccentric Pin
8.	GR1124	1	Pin
9.	GR1104	1	Bearing
10.	GR1805	1	Setting Hub Assembly
11.	GR1134	1	Stuffing Box Insert
12.	GR1146	1	Sprocket, 18 Tooth
13.	GR1808	1	Adjustment Wrench
14.	GR1806	1	Setting Pointer Assembly
15.	GR1796	1	Repair Kit, Includes: (6) Gaskets, (9) O-Rings, (4) Washers, (1) Retaining Ring, (2) Oil Seals, (1) Snap Ring, (1) Thrust Washer, (1) Rod Bushing, (2) Flange Plunger Packings, (2) Packing Springs, (2) Rod Vee Packing Sets
16.	GR1800	2	Discharge Valve Assembly
17.	GR1798	2	Suction Valve Assembly
18.	GR1118	3	Setting Arm Key
19.	GR1116	1	Bearing
20.	G10306	1	Carriage Bolt, 3⁄8"-16 x 2"
	G10108	1	Lock Nut, 3⁄8"-16
21.	G10003	4	Hex Head Cap Screw, 3⁄8"-16 x 1 1⁄2"
	G10210	4	Washer, 3⁄8" USS
	G10229	4	Lock Washer, 3⁄8"
	G10101	4	Hex Nut, 3⁄8"-16
A.	GA12335	-	Piston Pump Complete W/18 Tooth Sprocket (Model NGP-7055)

LIQUID FERTILIZER PISTON PUMP FLOW DIVIDER

(FRTZ159/PT40a/FRTZ202c)

Model FD-1200 Flow Divider, 12 Outlet

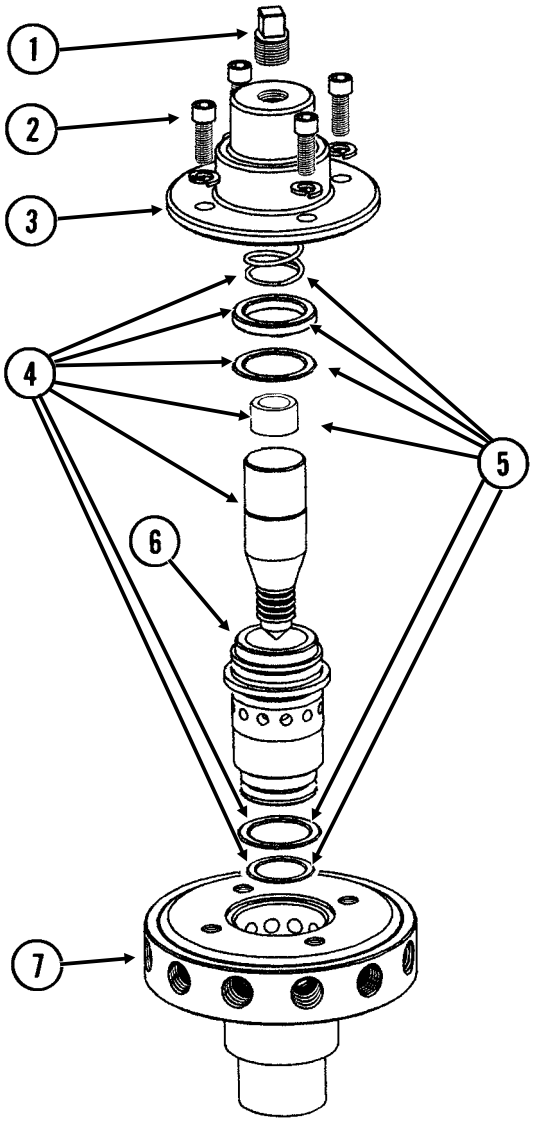

¾" NPT

Model FD-2000 Flow Divider, 20 Outlet

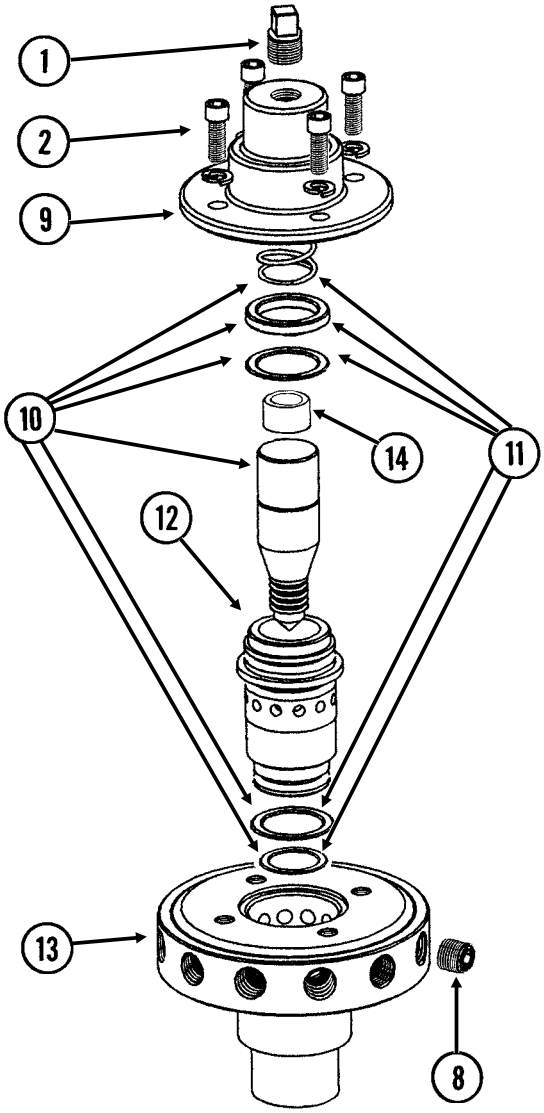

1" NPT

LIQUID FERTILIZER PISTON PUMP FLOW DIVIDER

ITEM	PART NO.	QTY.	DESCRIPTION
1.	GR1543	1	Vent Plug
2.	GR1542	4	Hex Socket Head Screw, ¼"-20 x ¾", Stainless Steel
	GR1541	4	Lock Washer, ¼", Stainless Steel
3.	GR1540	1	Cap
4.	GR1544	1	Needle Assembly W/Seal Kit (Item 22)
5.	GR1545	1	Seal Kit, Includes: (3) O-Rings, (1) Seal, (1) Spring, (1) Stainless Steel Sleeve
6.	GR1535	1	Sleeve
7.	GR1533	1	Body, (12 Outlets)
8.	G10350	4	Hex Socket Head Plug, ¼" NPT, Stainless Steel
9.	GR1566	1	Cap
10.	GR1567	1	Needle Assembly W/Seal Kit (Item 22)
11.	GR1568	1	Seal Kit, Includes: (3) O-Rings, (1) Seal, (1) Spring
12.	GR1561	1	Sleeve
13.	GR1559	1	Body, (20 Outlets)
14.	GR1574	1	Sleeve, 1" O.D. x ½" Long, Stainless Steel
A.	GA8931	1	Liquid Fertilizer Piston Pump Flow Divider Complete, 12 Outlet (Model FD-1200) (Items 1-7) (12 Row Planters)
B.	GA9407	1	Liquid Fertilizer Piston Pump Flow Divider Complete, 20 Outlet (Model FD-2000) (Items 1, 2 And 8-14) (16 Row Planters)

REAR TRAILER HITCH

PHA032/LFC003(TWL47a)

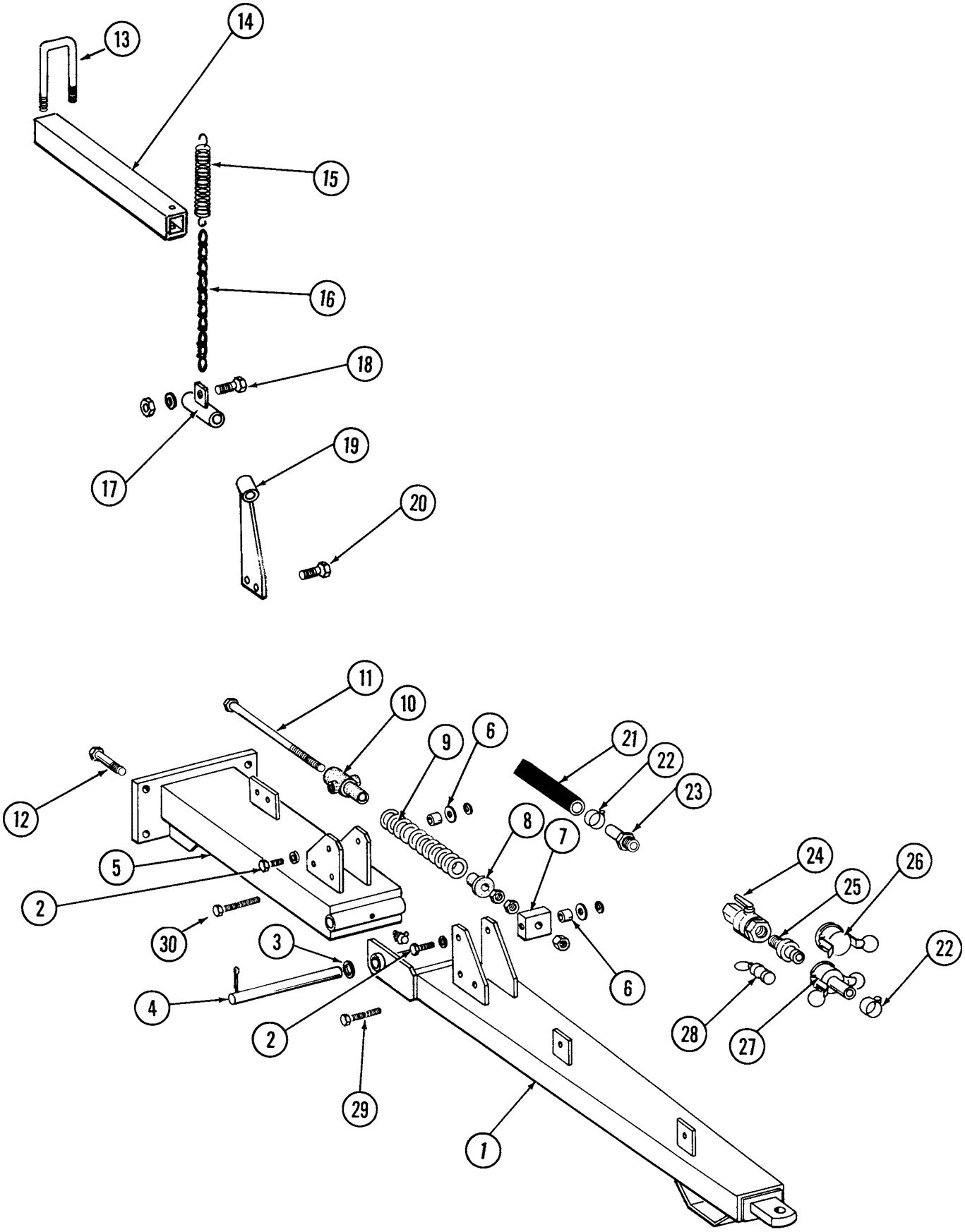

REAR TRAILER HITCH

ITEM	PART NO.	QTY.	DESCRIPTION
1.	GA6961	1	Hitch
2.	G10007	4	Hex Head Cap Screw, 5/8"-11 x 1 1/2"
	GD7805	4	Special Washer, 5/8", Hardened
	G10230	4	Lock Washer, 5/8"
3.	G10226	2	Washer, 1 1/4" SAE
4.	GD3547	1	Pin, 1 1/4" x 12 3/4"
	G10460	2	Cotter Pin, 1/4" x 2"
5.	GA6960	1	Hitch
6.	GB0218	4	Bushing, 21/32" I.D. x 7/8" O.D. x 19/32" Long
7.	GD7908	1	Tap Block
8.	GB0213	1	Spring Seat
9.	GD2115	1	Spring
10.	GB0206	1	Rod Guide
11.	GD7907	1	Special Bolt
	G10105	3	Hex Nut, 3/4"-10
12.	G10826	5	Hex Head Cap Screw, 1"-8 x 2 1/2"
	G10396	5	Lock Nut, 1"-8
13.	GD2721	2	U-Bolt, 2" x 2" x 1/2"-13
	G10228	4	Lock Washer, 1/2"
	G10102	4	Hex Nut, 1/2"-13
14.	GD10196	-	Hanger Tube
15.	GD0829	-	Spring
16.	G3305-03	-	Twin Loop Chain, 15 Links
17.	GA7209	-	Hose Support
18.	G10064	1	Hex Head Cap Screw, 1/4"-20 x 1"
	G10209	2	Washer, 1/4" USS
	G10110	1	Lock Nut, 1/4"-20, Grade B
19.	GA7208	-	Hose Support
20.	G10004	2	Hex Head Cap Screw, 3/8"-16 x 1 1/4"
	G10108	2	Lock Nut, 3/8"-16
21.	G4200-01	1	Hose, 1 1/4" x 22'
22.	G10672	6	Hose Clamp, No. 28
23.	G10626	1	Adapter, 1 1/4" NPT To Barb
24.	GA4976	1	Shutoff Valve, 1 1/4" NPT
	GR1015	-	Body O-Ring
	GR1016	-	Stem O-Ring
	GR1017	-	Teflon Seat
	GR1018	-	Ball
	GR1019	-	Handle
25.	GD1514	1	Adapter, 1 1/4" Male NPT To Cam Lock
26.	GD1515	1	Dust Cap, 1 1/4" Cam Lock
27.	GD1516	1	Adapter, 1 1/4" Barb To Female Cam Lock
28.	GD1517	1	Dust Plug, 1 1/4" Male Cam Lock
29.	G10172	1	Hex Head Cap Screw, 3/8"-16 x 5"
	G10229	1	Lock Washer, 3/8"
	G10101	1	Hex Nut, 3/8"-16
30.	G10756	1	Hex Head Cap Screw, 3/8"-16 x 6"
	G10229	1	Lock Washer, 3/8"
	G10101	1	Hex Nut, 3/8"-16

DECALS, PAINT AND MISCELLANEOUS

WARNING

ALWAYS USE SAFETY PINS IN TRANSPORT POSITION

7100-2

1

WEEKLY

2

DAILY

3

WARNING

AGRICULTURAL CHEMICALS CAN BE DANGEROUS. IMPROPER SELECTION OR USE CAN SERIOUSLY INJURE PERSONS, ANIMALS, PLANTS, SOIL OR OTHER PROPERTY. BE SAFE. SELECT THE RIGHT CHEMICAL FOR THE JOB. HANDLE WITH CARE. FOLLOW THE INSTRUCTIONS ON THE CONTAINER LABEL AND OF THE EQUIPMENT MANUFACTURER.

7100-115

4

DAILY

7100-116

5

DANGER

SERIOUS INJURY OR DEATH CAN RESULT FROM CONTACT WITH ELECTRICAL LINES. USE CARE TO AVOID CONTACT WITH ELECTRIC LINES WHEN MOVING OR OPERATING THIS MACHINE.

7100-117

6

ATTENTION

Connect directly to **BATTERY** whenever possible

Connect black lead to negative terminal

Connect to 12 Volts Only

7100-123

7

USE 1 TABLESPOON POWDERED GRAPHITE WITH EACH HOPPER FILL OF SEED. SEED TREATMENT, FOREIGN MATERIAL, DIRT, OR SEED CHAFF MAY CAUSE GRADUAL REDUCTION OF SEED POPULATION. REFER TO MANUAL FOR MAINTENANCE AND CARE.

7100-153

8

Twin•Line®

7100-177

9

ROTATION

7100-192

10

WARNING

ALWAYS USE SAFETY STAND IN TRANSPORT POSITION

7100-200

11

MARKER SPEED CONTROL

LOWER

SEE MANUAL FOR PROPER ADJUSTMENT

RAISE

7100-201

12

Interplant®

7100-205

13

DANGER

DO NOT REMOVE THIS ASSEMBLY AFTER PLANTER IS ASSEMBLED FOR USE. REMOVAL OF THIS WHEEL AND AXLE ASSEMBLY CAN CAUSE THE MACHINE TO BECOME UNSTABLE AND TIP OVER CAUSING DAMAGE OR SERIOUS INJURY.

7100-215

15

14

NOTE

It is the responsibility of the user to read and understand the Operator's Manual in regards to safety, operation, lubrication and maintenance before operation of this equipment.

AN OPERATOR & PARTS MANUAL IS AVAILABLE FOR THIS MACHINE.

To obtain a manual, furnish model number and serial number and contact your KINZE Dealer or KINZE Manufacturing, Inc., P.O. Box 806 Williamsburg, IA 52361-0806 USA

16

WARNING

MAXIMUM INFLATION PRESSURE 75 PSI

7100-219

17

TORQUE 5/8" SPINDLE BOLTS TO 120 FT/LBS. CHECK PERIODICALLY AND RE-TORQUE AS NEEDED.

7100-234

18

KINZE 3600V

19

EVOLUTION SERIES

20

DECALS, PAINT AND MISCELLANEOUS

ROTATE KNURLED COLLAR
ON WRAP SPRING TIGHTENER
TO RELEASE SPRING
TENSION
7100-295

21

CAUTION

SET DOWN PRESSURE SPRINGS TO MINIMUM. LOWER PLANTER TO GROUND AND EMPTY SEED HOPPERS. REQUIRES 90 LB MIN TO LIFT .
7100-249

22

WARNING

TO AVOID INJURY --
STAND CLEAR--KEEP OTHERS AWAY WHEN RAISING OR LOWERING MARKERS. BEFORE TRANSPORTING PLANTER FULLY EXTEND HYDRAULIC CYLINDERS AND INSTALL LOCKING PINS WHERE PROVIDED.
7100-42

23

WARNING

1. Read and understand the Operator's Manual.
2. Stop the tractor engine before leaving the operator's platform.
3. Keep riders off the machine.
4. Make certain everyone is clear of the machine before starting the tractor engine and operating.
5. Keep all shields in place.
6. Never lubricate, adjust, unclog or service the machine with tractor engine running.
7. Wait for all movement to stop before servicing.
8. Keep hands, feet and clothing away from moving parts.
9. Use flashing warning lights when operating on highways except when prohibited by law.

7100-46

24

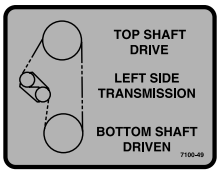

25

WARNING

USE SAFETY CHAINS PROVIDED. TOW ONLY WITH FARM TRACTOR.
7100-302

26

CAUTION

REAR OF PLANTER SWINGS WIDE IN TURNS. ALWAYS ALLOW SUFFICIENT ROOM TO CLEAR OBSTACLES WHEN TURNING.
7100-63

27

CAUTION

AVOID UNEVEN LOADING OF HOPPERS, ESPECIALLY DURING TRANSPORT
7100-75

29

WARNING

TO AVOID INJURY
ALWAYS USE HYDRAULIC CYLINDER SAFETY LOCKOUT CHANNELS WHEN TRANSPORTING PLANTER ON THE ROAD. AFTER USE RETURN TO STORAGE LOCATION.
7100-83

30

WARNING

NEVER WALK UNDER OR WORK ON PLANTER WHEN IT IS RAISED WITHOUT SUPPORTING THE FRAMES WITH ADDITIONAL SUPPORTS.
7100-68

28

31

WARNING

THIS MACHINE HAS BEEN DESIGNED AND BUILT WITH YOUR SAFETY IN MIND. DO NOT MAKE ANY ALTERATIONS OR CHANGES TO THIS MACHINE. ANY ALTERATION TO THE DESIGN OR CONSTRUCTION MAY CREATE SAFETY HAZARDS.
7100-90

32

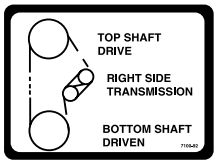

33

A A

34

35

36

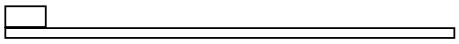

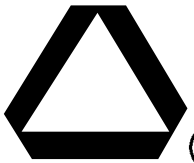

37

38

39

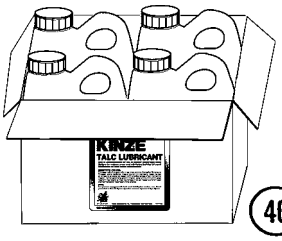

40

41

DECALS, PAINT AND MISCELLANEOUS

ITEM	PART NO.	QTY.	DESCRIPTION
1.	G7100-02	3	Decal, Warning
2.	G7100-110	-	Decal, Grease Weekly
3.	G7100-111	-	Decal, Oil Daily
4.	G7100-115	-	Decal, Warning (1 Per Granular Chemical Hopper)
5.	G7100-116	-	Decal, Grease Daily
6.	G7100-117	1	Decal, Danger
7.	G7100-123	1	Decal, Attention
8.	G7100-153	-	Decal, Information (1 Per Brush-Type Seed Meter)
9.	G7100-177	1	Decal, Twin-Line®, ¾" x 3"
10.	G7100-192	-	Decal, Point Row Clutch Rotation
11.	G7100-200	-	Decal, Warning
12.	G7100-201	1	Decal, Information
13.	G7100-208	-	Decal, Interplant®
14.	G7100-258	-	Reflective Decal, Red, 1 ½" x 9", Rectangular (If Applicable)
	G7100-259	-	Reflective Decal, Amber, 1 ½" x 9", Rectangular (If Applicable)
	G7100-260	-	Reflective Decal, Orange, 1 ½" x 9", Rectangular (If Applicable)
15.	G7100-215	1	Decal, Danger
16.	G7100-217	-	Decal, Note
17.	G7100-219	-	Decal, Warning
18.	G7100-234	-	Decal, Bolt Torque
19.	G7100-333	2	Decal, KINZE® 3600V
20.	G7100-247	-	Decal, Logo, 4 ⅜" x 4 ½" (2 Per Row Unit)
	G7100-252	-	Decal, Logo, 3 ½" x 3 ⅝" (Hopper Panel Extension)
21.	G7100-295	-	Decal, Spring Tension Release
22.	G7100-249	-	Decal, Caution
23.	G7100-42	4	Decal, Warning
24.	G7100-46	1	Decal, Warning
25.	G7100-49	1	Decal, Left Side Transmission
26.	G7100-302	1	Decal, Warning
27.	G7100-63	2	Decal, Caution
28.	G7100-68	3	Decal, Warning
29.	G7100-75	4	Decal, Caution
30.	G7100-83	2	Decal, Warning (1 Per Marker Lockup)
31.	G7100-261	-	Reflective Decal, Red, 1 ¾" x 9", Die-Cut (If Applicable)
	G7100-262	-	Reflective Decal, Amber, 1 ¾" x 9", Die-Cut (If Applicable)
	G7100-263	-	Reflective Decal, Orange, 1 ¾" x 9", Die-Cut (If Applicable)
32.	G7100-90	1	Decal, Warning
33.	G7100-92	1	Decal, Right Side Transmission
34.	GD10057-01	-	Hose Identification Sleeve, Red AA
	GD10057-02	-	Hose Identification Sleeve, Red BB
	GD10057-03	-	Hose Identification Sleeve, Blue AA
	GD10057-04	-	Hose Identification Sleeve, Blue BB
35.	GM0212	-	Operator & Parts Manual, Model 3600V (Mechanical Seed Metering)
36.	GD1512	-	Tie Strap, 7 ½"
	GD2117	-	Tie Strap, 14 ½"
	GD1162	-	Tie Strap, 28"
	GD2984	-	Tie Strap, 34"
37.	GD2199	1	SMV Sign
38.	GR0146	-	Powdered Graphite, 1 Pound Container
	GR0146MPP	-	Powdered Graphite, Twenty-Four 1 Pound Containers
39.	GR0155	-	Blue Paint, Aerosol Can
	GR0155MPP	-	Blue Paint, Twelve Aerosol Cans
40.	GR1570MPP	-	Talc Lubricant, Four 8 Pound Containers

NUMERICAL INDEX

Part No.	Page
A6904	P49
*A1011	P79
*A1018	P81
*A1027	P82
*A1028	P82
*A1033	P81
*A1034	P81
*A1041	P79
*A1055	P81
*A1057	P82
*A1076	P81, P82
*A1097	P81, P82
*A1106	P79
*A1116	P79
*A1129	P79
*A1139	P79
*A12042	P81
*A1404	P82
*A1424	P82
*A1467	P79
*A1478	P79
*A1489	P79
*A1491	P79
*A3118	P79
*A3122	P82
*A3127	P81
*A3128	P81
*A3131	P82
*A3133	P79
*A3156	P79
*A3183	P79
*A7603	P79
*A8267	P81
A6892	P49
A6893	P49
A6905	P49
A7010	P37
A7088	P37
A7220	P64
A7393	P45
A7426	P41
A7429	P41
A7524	P69
A8797	P65
A8822	P69
A8873	P65
D13169	P66
D13426	P66
G10001	P5, P10, P15, P17, P45, P47, P49, P89, P97
G10002	P47, P99
G10003	P3, P31, P41, P111
G10004	P5, P35, P41, P43, P91, P97, P115
G10005	P33, P39, P106
G10006	P15, P29, P36
G10007	P5, P10, P11, P19, P33, P39, P97, P105, P107, P115
G10008	P61
G10009	P36, P63
G10010	P13, P31, P33, P95, P103
G10011	P33, P51, P61, P99
G10012	P63, P107
G10013	P17, P107
G10014	P13, P33, P37, P41
G10015	P15
G10016	P37, P91, P97
G10017	P5, P27, P37, P41, P47, P51, P57, P61, P63, P99, P107
G10018	P13, P15
G10019	P9, P59, P93, P107
G10020	P5, P22, P55
G10021	P22, P47
G10022	P22, P56, P83
G10023	P5
G10025	P45
G10026	P37, P57, P107
G10027	P51
G10028	P53
G10033	P29, P49
G10036	P25, P47
G10037	P5, P45, P55
G10039	P5, P27, P33, P97
G10040	P9
G10043	P89
G10045	P29, P93
G10046	P33, P61, P93, P99
G10047	P99
G10049	P53, P97
G10053	P43, P45
G10054	P71
G10061	P20
G10062	P37
G10064	P17, P45, P49, P56, P115
G10071	P5
G10085	P45
G10096	P105
G10100	P53, P97
G10101	P5, P10, P17, P19, P35, P41, P43, P49, P70, P88, P89, P91, P93, P111, P115
G10102	P5, P9, P15, P29, P33, P37, P41, P45, P51, P53, P55, P57, P59, P61, P63, P89, P91, P93, P95, P99, P107, P115
G10103	P5, P45, P49, P55, P56
G10104	P5, P10, P19, P35, P36, P37, P45, P49, P61, P63, P91, P93, P97, P99, P105, P106, P107, P109
G10105	P36, P45, P53, P57, P97, P105, P107, P115
G10106	P9, P15, P27, P45, P71, P89
G10107	P15, P17, P25, P27, P33, P36, P43, P45, P51, P93, P99, P101, P106, P107
G10108	P3, P5, P20, P35, P37, P41, P43, P49, P53, P64, P97, P99, P101, P111, P115
G10109	P13, P15, P17, P29, P31, P33, P59, P93, P101
G10110	P49, P83, P115
G10111	P5, P17, P25, P27, P29, P33, P37, P41, P43, P49, P61, P63, P93, P97, P99, P101
G10112	P33, P37, P45
G10118	P39
G10128	P47
G10130	P5, P35, P90
G10131	P41
G10133	P17, P29, P31, P33, P47, P71, P93, P101
G10152	P15
G10157	P36, P37, P39
G10159	P49
G10168	P59
G10169	P36, P39
G10171	P15
G10172	P43, P70, P115
G10194	P31
G10201	P3, P35
G10203	P5, P35, P43, P101
G10204	P11, P13, P93, P103
G10205	P33, P37, P45, P61, P95, P96, P97, P107
G10206	P5, P31, P45, P49, P61, P63, P91, P99
G10207	P3
G10209	P9, P56, P115
G10210	P3, P15, P17, P19, P20, P35, P41, P43, P91, P93, P97, P99, P111
G10211	P85
G10213	P11, P31, P33, P93

NUMERICAL INDEX

Part No.	Page
G10216	P5, P13, P15, P27, P35, P37, P41, P51, P53, P61, P63, P91, P95, P97, P107
G10217	P39, P99, P107
G10218	P45, P105
G10219	P9, P15, P99
G10220	P97
G10221	P93
G10226	P37, P53, P57, P63, P115
G10227	P9, P45, P49, P55, P56
G10228	P5, P9, P13, P29, P37, P41, P45, P51, P53, P55, P57, P59, P61, P63, P89, P91, P93, P95, P99, P107, P115
G10229	P5, P10, P17, P19, P31, P35, P41, P43, P49, P67, P68, P70, P88, P89, P91, P93, P97, P111, P115
G10229	P10
G10230	P5, P10, P13, P17, P19, P35, P36, P37, P39, P49, P61, P63, P91, P93, P95, P97, P99, P105, P106, P107, P109, P115
G10231	P36, P53, P57, P105, P107
G10232	P9, P15, P45, P71, P75, P89, P93, P99, P107
G10233	P47, P90, P103
G10234	P45
G10237	P53, P97
G10243	P89
G10278	P104, P109
G10284	P35
G10292	P109
G10303	P15
G10305	P24, P93
G10306	P99, P101, P111
G10307	P35
G10308	P17, P24
G10309	P20
G10312	P3, P49
G10318	P27
G10322	P63, P97
G10323	P22
G10325	P11
G10326	P3
G10328	P11, P67, P68
G10330	P55
G10336	P45
G10338	P13, P20
G10342	P105
G10348	P29
G10350	P113
G10371	P29
G10395	P83
G10396	P115
G10400	P33
G10401	P22
G10404	P45
G10412	P5, P10, P20, P35, P91
G10427	P11, P15
G10436	P53
G10437	P53
G10438	P3, P95
G10439	P49
G10441	P51
G10448	P55
G10449	P65
G10450	P99
G10451	P93
G10456	P35, P95
G10457	P37
G10459	P97
G10460	P49, P53, P57, P61, P63, P106, P115
G10462	P36, P41
G10463	P15, P35
G10468	P41
G10470	P22
G10496	P91
G10499	P93
G10500	P22
G10501	P29, P47
G10503	P27, P31, P33, P93, P101
G10504	P93
G10507	P97
G10509	P64
G10526	P95
G10529	P24
G10531	P23
G10535	P91
G10536	P27, P61, P63
G10542	P93
G10543	P45
G10544	P59
G10546	P20
G10551	P3
G10560	P95
G10567	P20
G10572	P27
G10574	P25, P29, P33
G10581	P43
G10583	P71
G10585	P27, P41
G10592	P97
G10594	P97
G10597	P27
G10599	P17, P19, P35
G10602	P20, P22, P23
G10603	P22, P23, P101
G10604	P22
G10606	P49
G10610	P37, P57, P95
G10615	P109
G10616	P105
G10619	P105, P109
G10620	P3, P13, P20, P49, P95, P103
G10621	P20, P22, P24
G10622	P11, P24
G10623	P105
G10626	P105, P109, P115
G10630	P105
G10633	P105
G10634	P23
G10636	P53
G10640	P13, P39, P45, P55, P61, P63, P65, P95, P97, P99, P101
G10641	P41, P61, P97, P107
G10643	P33
G10647	P53
G10669	P3
G10672	P115
G10674	P105, P109
G10676	P105
G10681	P93, P109
G10686	P88
G10688	P91
G10689	P43, P51
G10690	P22
G10693	P111
G10718	P35
G10722	P59
G10724	P59
G10725	P59
G10732	P5, P10, P35
G10751	P20, P35
G10752	P20, P91
G10756	P115
G10758	P89
G10765	P31, P33, P36
G10770	P66
G10779	P39, P51
G10801	P15, P17
G10802	P36, P53
G10808	P53
G10826	P115
G10827	P69
G10828	P45
G10830	P101, P106

NUMERICAL INDEX

Part No.	Page
G10844	P59
G10860	P56
G10862	P97
G10870	P56
G10871	P99
G10874	P49
G10887	P105, P109
G10888	P105
G10889	P105
G10894	P41
G10907	P64, P65
G10908	P101
G10912	P11, P35
G10913	P55
G10917	P104, P109
G10923	P5, P35, P90
G10924	P13
G10927	P89
G10928	P89
G10931	P89
G10936	P75
G10938	P93
G10939	P64
G10940	P13
G10958	P64, P65
G10961	P95, P103
G10962	P69
G10968	P91
G10969	P69
G10972	P64, P67, P68
G10974	P31, P33
G10977	P71
G10979	P63
G10990	P67, P68
G10991	P99, P111
G10992	P9
G10995	P109
G10996	P76, P85
G11007	P3
G11008	P3
G11009	P22, P23
G11010	P33
G11015	P3
G11016	P66
G11018	P5
G11034	P101
G11042	P107
G11053	P51
G11058	P37
G11065	P73, P89
G11066	P9, P71
G11067	P71
G11068	P73
G11081	P57
G11083	P109
G11098	P31
G11122	P107
G11151	P23
G11159	P85
G11169	P41
G11182	P105
G11220	P5
G11223	P39
G11228	P31
G11236	P31
G11237	P109
G11239	P35
G11241	P89
G11242	P47
G11243	P5, P35, P83
G11244	P83
G11247	P9
G11284	P3
G11288	P89
G11295	P5, P35
G11296	P5, P35
G11298	P3
G1K215	P95
G1K248	P7, P85, P89
G1K252	P7, P85, P89
G1K267	P7, P85
G1K268	P7, P85
G1K269	P91
G1K274	P76
G1K275	P76
G1K296	P13
G1K320	P7, P85
G1K321	P7, P85, P91
G1K345	P17
G1K362	P89
G1K363	P89
G1K412	P37
G2100-03	P47
G2500-84	P107
G2603-08	P81
G2700-08	P67, P68, P79
G2700-10	P79
G2703-08-08-10	P81
G306-08	P53, P67, P68
G306-10	P53
G3200-63	P107
G3303-16	P3
G3303-96	P35
G3303-98	P3
G3305-01	P24
G3305-03	P115
G3310-226	P91
G3310-84	P47
G3317-16	P47
G3400-01	P47
G4200-01	P115
G4200-03	P105
G4200-06	P105
G4201-02	P105
G4201-03	P105
G4205-10	P109
G4205-11	P104
G4301-05	P109
G4301-06	P109
G6325X	P5, P10
G6400-06	P73
G6400-06-08	P79
G6400-08	P70, P71, P73, P79, P81
G6400-08-04	P67, P68, P81
G6400-08-10	P71
G6400-10	P71, P73
G6400-10-08	P70
G6400-L-08	P82
G6408-08	P71
G6408-10	P71
G6408-H04-O	P64
G6408-H06-00	P75
G6408-H06-O	P71, P73
G6408-H08-00	P75
G6408-H10-00	P75
G6500-06	P73
G6500-08	P82
G6502-06	P79
G6801-06	P73
G6801-06-08	P79
G6801-08	P73, P75, P81
G6801-08-10	P71
G6801-10	P75
G7100-02	P118
G7100-110	P118
G7100-111	P118
G7100-115	P118
G7100-116	P118
G7100-117	P118
G7100-123	P118
G7100-153	P118
G7100-177	P118
G7100-192	P118
G7100-200	P118
G7100-201	P118
G7100-208	P118
G7100-215	P118
G7100-217	P118
G7100-219	P118
G7100-234	P118
G7100-247	P118
G7100-249	P118
G7100-252	P118
G7100-258	P118
G7100-259	P118
G7100-260	P118
G7100-261	P118

NUMERICAL INDEX

Part No.	Page
G7100-262	P118
G7100-263	P118
G7100-295	P118
G7100-302	P118
G7100-333	P118
G7100-42	P118
G7100-46	P118
G7100-49	P118
G7100-63	P118
G7100-68	P118
G7100-75	P118
G7100-83	P118
G7100-90	P118
G7100-92	P118
G7566X	P19
G7633X	P85
G7698X	P49
GA0167	P59
GA0237	P97
GA0241	P107
GA0243	P59
GA0245	P59
GA0251	P107
GA0252	P107
GA0257	P59
GA0262	P107
GA0312	P93
GA0328	P93
GA0547	P107
GA0810	P93
GA0895	P57
GA0899	P59
GA10036	P103
GA10037	P103
GA10137	P20
GA10151	P20
GA10155	P20
GA10157	P3
GA10161	P35
GA10621	P107
GA10622	P106
GA10624	P106
GA10894	P107
GA10901	P89
GA10907	P107
GA10908	P107
GA10924	P85
GA10940	P89
GA11066	P87
GA11079	P39
GA11082	P39
GA11083	P39
GA11200	P53
GA11331	P47
GA11520	P25
GA11568	P63
GA11569	P63
GA11590	P61
GA11766	P61
GA11767	P61
GA11768	P63
GA11769	P63
GA11969	P35
GA11971	P35
GA11982	P5
GA11988	P9
GA11991	P9
GA11992	P9
GA11993	P9
GA11994	P9
GA11995	P9
GA11997	P9
GA12044	P82
GA12102	P9
GA12104	P9
GA12108	P99
GA12109	P99
GA12163	P39
GA12164	P39
GA12165	P39
GA12235	P31, P33
GA12236	P29, P31, P33
GA12256	P31
GA12335	P111
GA12358	P9
GA12404	P9
GA12405	P5
GA12536	P87
GA12537	P87
GA12538	P89
GA12539	P87
GA12540	P87
GA12551	P87
GA12552	P87
GA12553	P87
GA12554	P83
GA12555	P87
GA12556	P87
GA12557	P89
GA12558	P87
GA12559	P87
GA12560	P87
GA12561	P87
GA12562	P87
GA12563	P89
GA12564	P87
GA12565	P47, P87
GA12568	P87
GA12569	P47
GA12596	P87
GA12598	P87
GA12626	P9
GA12630	P35
GA12641	P89
GA12655	P87
GA12661	P47
GA12684	P7
GA12812	P7
GA12813	P7
GA12814	P7
GA12815	P7
GA12852	P87
GA12853	P87
GA12858	P7
GA12861	P83
GA12865	P83
GA12866	P83
GA12868	P87
GA13078	P75, P77
GA13079	P75
GA13169	P9
GA13204	P55, P87
GA13214	P55
GA13219	P75
GA13227	P55
GA13335	P57
GA13512	P9
GA13580	P3
GA1369	P93
GA1676	P59
GA1677	P59
GA1678	P59
GA1679	P59
GA1720	P5, P10
GA2007	P20
GA2012L	P11
GA2012R	P11
GA2014	P11, P15, P27, P29, P31, P33, P93, P101
GA2018	P22
GA2019	P22
GA2020	P22
GA2054	P15
GA2094	P24
GA2148	P57
GA2180	P35, P47, P90
GA2528	P85
GA2559	P107
GA2612	P85
GA2660	P105
GA2908	P57
GA3407	P77
GA3413	P76
GA3584	P84
GA3893	P109
GA4286	P96
GA4287	P96
GA4293	P75, P77

NUMERICAL INDEX

Part No.	Page
GA4353	P61
GA4376	P57
GA4377	P57
GA4402	P37
GA4418	P37
GA4722	P55
GA4723	P55
GA4727	P55
GA4729	P55
GA4842	P37
GA4845	P37
GA4877	P63
GA4976	P105, P115
GA4994	P36
GA4995	P36
GA5105	P47
GA5107	P91
GA5108	P47
GA5121	P51
GA5130	P61
GA5385	P85
GA5600	P89
GA5625	P25
GA5651	P5, P10
GA5654	P27, P29, P31, P33, P101
GA5698	P23
GA5699	P23
GA5715	P27
GA5716	P55
GA5718	P27
GA5719	P27
GA5787	P35
GA5794	P23
GA5795	P23
GA5796	P23
GA5834	P23
GA5842	P37
GA5853	P59
GA5887	P96
GA5982	P23
GA6027	P23
GA6038	P23
GA6108	P85
GA6109	P85
GA6147	P89
GA6168	P23
GA6171	P13, P15, P17, P95, P103
GA6182	P23
GA6184	P23
GA6187	P23
GA6434	P17
GA6478	P23
GA6497	P45
GA6527	P109
GA6597	P17
GA6608	P53
GA6618	P15
GA6619	P15
GA6620	P15
GA6633	P23
GA6699	P84
GA6700	P84
GA6701	P85
GA6733	P15
GA6801	P15
GA6832	P29
GA6833	P29
GA6834	P29
GA6838	P29
GA6928	P45
GA6929	P45
GA6943	P45
GA6960	P115
GA6961	P115
GA6964	P51
GA6966	P99
GA6975	P85
GA6977	P85
GA6978	P7, P85
GA7013	P43
GA7016	P36
GA7018	P49
GA7019	P49
GA7021	P43
GA7022	P36, P53
GA7029	P37
GA7042	P61
GA7043	P63
GA7049	P43
GA7050	P43
GA7051	P91
GA7052	P90
GA7067	P51
GA7077	P85
GA7083	P37
GA7084	P37
GA7085	P37
GA7096	P51
GA7098	P53
GA7118	P63
GA7133	P105
GA7135	P93
GA7154	P47, P91
GA7208	P115
GA7209	P115
GA7221	P64
GA7239	P97
GA7240	P97
GA7255	P23
GA7271	P31
GA7390	P45
GA7399	P85
GA7412	P31
GA7423	P41
GA7424	P41
GA7433	P36
GA7434	P55, P57
GA7445	P31, P33, P101
GA7446	P29, P31, P33, P101
GA7533	P37
GA7540	P51
GA7579	P45
GA7845	P105
GA7851	P87, P89
GA7852	P87, P89
GA7856	P7, P85
GA7859	P89
GA7862	P85
GA7863	P85
GA7949	P13
GA7975	P13
GA7976	P13
GA7997	P57
GA7998	P101
GA7999	P101
GA8046	P89
GA8047	P85, P89
GA8062	P53
GA8092	P91
GA8149	P64
GA8157	P65
GA8170	P61, P63
GA8286	P82
GA8305	P95
GA8306	P95
GA8320	P65
GA8322	P17
GA8324	P11
GA8328	P7
GA8329	P7
GA8343	P22
GA8483	P93
GA8603	P25, P33, P99
GA8641	P25, P33
GA8651	P35
GA8677	P57
GA8685	P93
GA8688	P97
GA8689	P97
GA8729	P85
GA8731	P85
GA8734	P85
GA8760	P31
GA8845	P93
GA8857	P67
GA8858	P67

NUMERICAL INDEX

Part No.	Page
GA8859	P68
GA8861	P68
GA8862	P68
GA8871	P69
GA8874	P65
GA8877	P95, P103
GA8893	P67
GA8895	P69
GA8898	P69
GA8899	P69
GA8904	P64
GA8908	P64
GA8909	P65
GA8931	P113
GA8978	P67
GA8979	P68
GA8983	P93, P97, P99
GA9088	P61, P63
GA9095	P71
GA9096	P84
GA9097	P71
GA9098	P73
GA9105	P35
GA9112	P85
GA9113	P85
GA9131	P33
GA9195	P93
GA9202	P85
GA9204	P85
GA9205	P66
GA9407	P113
GA9433	P99
GA9434	P99
GA9437	P99
GA9472	P103
GA9481	P85
GA9544	P55
GA9545	P55
GA9553	P47
GA9559	P66
GA9565	P99
GA9689	P85
GA9714	P21
GA9836	P36
GA9837	P36
GA9840	P49
GA9844	P33
GA9845	P33
GA9861	P33
GA9862	P33
GA9864	P33
GA9865	P33
GA9883	P53
GA9905	P104
GA9963	P83
GA9964	P7
GA9978	P89
GA9979	P89
GB0110	P22
GB0111	P22
GB0120	P22
GB0134	P93
GB0186	P10
GB0196	P107
GB0205	P96
GB0206	P97, P115
GB0212	P95
GB0213	P97, P115
GB0218	P5, P10, P20, P33, P35, P36, P43, P97, P106, P115
GB0237	P36
GB0239	P15, P17
GB0246	P41
GB0254	P17
GB0265	P3
GB0266	P3
GB0267	P3
GB0268	P15, P17
GB0274	P3
GB0276	P13
GB0278	P20
GB0282	P17
GB0285	P3
GB0292	P37
GB0296	P99
GB0301	P11, P35
GB0309	P49
GB0314	P20, P35
GB0322	P99
GB0323	P99
GB0331	P20
GB0366	P5, P10
GB0383	P31
GB0386	P33
GB0387	P29, P31
GB0389	P5
GB0390	P5
GB0391	P5
GB0392	P5
GB0393	P5
GB0394	P5
GB0395	P5
GB0396	P5
GB0397	P5
GB0398	P5
GB0400	P99
GB0401	P31
GB0405	P99
GB0409	P45
GD0453-03	P63
GD0453-04	P61
GD0453-07	P61
GD0453-09	P63
GD0487	P93
GD0652	P63
GD0746	P59
GD0752-41	P61
GD0829	P115
GD0831	P107
GD0840	P59
GD0844	P107
GD0914-124	P90
GD0914-138	P90
GD0914-24	P90
GD0914-33	P90
GD0914-48	P90
GD0914-54.75	P47
GD0914-66	P90
GD0914-90	P90
GD0962	P93
GD10006	P45
GD10011	P51
GD10012	P51
GD10013	P51
GD10014	P51
GD10036	P5, P10
GD10053	P45
GD10057-01	P118
GD10057-02	P118
GD10057-03	P118
GD10057-04	P118
GD10063	P51
GD10064	P53
GD10092	P53
GD10110	P105
GD10144	P57
GD10196	P115
GD10207	P69
GD10211	P64
GD10226	P22
GD10231	P53
GD10242	P97
GD10243	P85
GD1026	P3, P35, P99
GD10273	P97
GD10283	P59
GD10298	P56
GD10303	P97
GD10304	P97
GD1033	P3
GD1039	P22
GD1041	P22
GD1042	P22
GD10446	P51
GD10447	P51
GD10473	P11, P15
GD10487	P97

NUMERICAL INDEX

Part No.	Page
GD10492	P45
GD10519	P31, P33
GD10526	P31
GD10530	P41
GD10531	P45
GD10532	P45
GD10538-01	P41
GD10552	P29, P31, P33, P101
GD10646	P37
GD1065	P3
GD10650	P41
GD10664	P41
GD10706	P45
GD10707	P45
GD10733	P22
GD10777	P105
GD10792	P61
GD10793	P63
GD1083	P22
GD1085	P17
GD1086	P13
GD10867	P3, P35
GD10936	P64
GD10991	P13
GD10993	P3
GD11001	P3
GD11017	P11
GD1104	P97
GD11045	P5, P35, P90
GD11089	P85, P89
GD1109	P15, P17
GD11122	P23
GD1113	P5, P10, P91, P93, P97, P99, P105, P109
GD11178	P101
GD11188	P101
GD11193	P64, P65
GD11194	P65
GD11218	P35
GD11239	P20
GD11253	P64, P65
GD11259	P3, P11
GD11263	P35
GD11264	P35
GD11265	P101
GD11266	P101
GD11279	P21
GD11286	P22
GD11306	P11, P93
GD11311	P22
GD11313	P19
GD1132	P27, P29, P31, P33, P93, P101
GD1138	P93
GD11413	P20
GD11422	P5, P10
GD11423	P13, P95, P103
GD1143	P24
GD1144	P24
GD11447	P35
GD1145	P24
GD11453	P13
GD11474	P89
GD11490	P57
GD11508	P19
GD11509	P19
GD11528	P22
GD11557	P99
GD11558	P99
GD1162	P118
GD11649	P35
GD11652	P25, P33
GD1166	P107
GD11677	P25
GD11695	P57
GD11700	P109
GD11705	P93
GD11721	P89
GD11787	P22
GD11791	P63
GD11836	P101
GD11845	P3, P11, P15
GD11951	P64
GD11953	P95, P103
GD11954	P95, P103
GD11962	P3, P35
GD11963-04	P5
GD11970	P67, P68
GD11972	P91
GD11973	P91
GD11983	P69
GD11984	P67, P68
GD11985	P69
GD11986	P69
GD11988	P64
GD11991	P64
GD11992	P64
GD11993	P89
GD11994	P65
GD11995	P65
GD12534	P29
GD12543	P53
GD12597	P67, P68
GD12676	P99
GD12677	P99
GD12679	P99
GD12684	P101
GD12685	P99
GD12703	P49
GD12724	P49
GD12726	P84
GD12817	P33
GD12818	P73
GD12826	P33
GD12827	P33
GD12829	P33
GD13146	P71
GD13170	P66
GD13171	P66
GD13172	P66
GD13173	P66
GD13287	P99
GD13309	P103
GD13310	P85
GD13328	P107
GD13348	P85
GD13359	P63
GD13360	P61
GD13361	P3
GD1337	P105
GD13400	P66
GD13401	P57
GD13409	P55
GD13422	P47
GD13425	P66
GD13543	P41
GD13544	P41
GD13545	P41
GD13546	P41
GD13744	P107
GD14170	P33
GD14217	P10
GD14258	P7
GD14398	P25
GD14562	P39
GD14660	P7
GD14674	P27, P31
GD15100	P39
GD1512	P118
GD1514	P115
GD1515	P115
GD1516	P115
GD1517	P115
GD1520	P104
GD15698	P22
GD15699	P23
GD15725	P39
GD15747	P20
GD15950	P49
GD16046	P85
GD16226	P39
GD16245	P3
GD16303	P39
GD16315	P89
GD16316	P89
GD16489	P47
GD16490	P47
GD1657	P93

NUMERICAL INDEX

Part No.	Page
GD1673	P93
GD16999	P61
GD17001	P63
GD17003	P63
GD1701	P63
GD17141	P9
GD17143	P9
GD17150-03	P9
GD17150-04	P9
GD17150-08	P9
GD17150-09	P9
GD17150-12	P9
GD17151-05	P83
GD17151-06	P7
GD17154	P9
GD17156	P9
GD1719	P91
GD17245	P39
GD1755	P23
GD17794	P5
GD18010	P7, P9
GD18011	P9
GD18013	P89
GD18014	P47
GD18066	P91
GD18067	P91
GD18073	P35
GD18074	P35
GD18078	P9
GD18085	P83
GD18094	P91
GD18112	P9
GD18114	P47
GD18115	P47
GD18116	P41
GD18118	P88
GD18119	P9
GD18168	P89
GD18176	P87
GD18177	P87
GD18274	P9
GD18275	P7
GD18326	P47
GD18329	P45
GD18344	P45
GD18389	P83
GD18395	P83
GD18398	P83
GD18407	P87
GD18408	P87
GD18437	P83
GD18512	P75
GD18513	P87
GD1862	P105
GD18643	P55
GD18645	P41
GD18646	P55
GD18676	P55
GD18677	P87
GD18796	P7
GD18891	P5, P35
GD1908	P49
GD19237	P9
GD19238	P9
GD19317	P3
GD2115	P115
GD2117	P118
GD2161	P61
GD2169	P51, P53
GD2199	P56, P118
GD2460	P24
GD2557	P37
GD2558	P37, P53, P107
GD2589	P93
GD2597	P59
GD2681	P106
GD2721	P61, P63, P115
GD2829	P85
GD2971-09	P37
GD2984	P118
GD3180-12	P15
GD3180-30	P5
GD3501	P37
GD3537-11	P41
GD3537-12	P41
GD3537-17	P41
GD3537-18	P41
GD3547	P115
GD3612	P3
GD3622	P105
GD3623	P105
GD3860	P85
GD3951	P105
GD4086	P79, P82
GD4108	P49
GD4743	P9, P47, P61, P63
GD5154	P37, P41
GD5173	P36, P41
GD5789	P56
GD5790	P56
GD5804	P37, P41
GD5841	P57
GD5857	P29, P36, P47, P56
GD5875	P49
GD5892	P37
GD6136	P49
GD6291	P85, P89
GD6501	P22
GD6553	P96
GD6556	P37
GD6895	P56
GD7079	P55
GD7089	P55
GD7137	P37
GD7147	P67, P68
GD7251	P37
GD7318	P3
GD7363-01	P45
GD7518	P37
GD7519	P37
GD7803	P25, P33
GD7804	P25, P33
GD7805	P5, P17, P20, P27, P35, P36, P43, P45, P61, P63, P91, P101, P103, P106, P107, P115
GD7817-01	P27
GD7817-04	P27, P101
GD7817-05	P107
GD7823	P27
GD7831	P107
GD7864	P55
GD7878	P23
GD7883	P41
GD7889	P27
GD7890	P27
GD7900	P96
GD7904-02	P45, P97
GD7907	P97, P115
GD7908	P97, P115
GD7911	P95
GD7962	P97, P101
GD8066-02	P71
GD8188	P37, P41, P43, P45
GD8189	P37, P41, P43, P45
GD8218	P95
GD8224	P97
GD8237	P23
GD8238	P97
GD8239	P97
GD8247	P96
GD8249	P10
GD8260	P36
GD8276	P53, P97
GD8306	P91
GD8307	P27
GD8308	P95
GD8460	P17
GD8739	P84
GD8740	P85
GD8741	P85
GD8751	P89
GD8770	P89
GD8771	P89
GD8778	P23
GD8893-01	P35
GD9120	P17
GD9130	P51

NUMERICAL INDEX

Part No.	Page
GD9254	P25, P33
GD9290	P15
GD9305	P15
GD9529	P76, P84
GD9530	P76, P84
GD9533	P71
GD9562	P15
GD9636	P51
GD9695	P35
GD9705	P95
GD9706	P95
GD9709	P95
GD9715	P29
GD9720	P29
GD9724	P29, P31, P33, P101
GD9870	P45
GD9896	P85
GD9898	P45
GD9905	P73
GD9952	P43
GD9953	P37
GD9955	P49
GD9956	P49
GD9959	P37, P41
GD9960	P37
GD9963	P49
GD9964	P49
GD9968	P45
GD9969	P56
GD9971	P70
GD9977	P71
GD9981	P61, P63
GM0212	P118
GR0146	P118
GR0146MPP	P118
GR0150	P59
GR0151	P59
GR0155	P118
GR0155MPP	P118
GR0188	P96
GR0190	P107
GR0193	P51
GR0195	P107
GR0196	P3, P35
GR0200	P107
GR0204	P107
GR0267	P107
GR0270	P57
GR0375	P51
GR0434	P57
GR0508	P104
GR0513	P104
GR0515	P36
GR0516	P36
GR0517	P36
GR0528	P55
GR0594	P89
GR0761	P76
GR0763	P76
GR0764	P76, P77
GR0880	P109
GR0881	P109
GR0882	P109
GR0883	P109
GR0912	P47, P91
GR1015	P105, P115
GR1016	P105, P115
GR1017	P105, P115
GR1018	P105, P115
GR1019	P105, P115
GR1037	P70, P71, P73, P75, P79, P81, P82
GR1045	P71, P73
GR1104	P111
GR1112	P111
GR1116	P111
GR1118	P111
GR1120	P111
GR1123	P111
GR1124	P111
GR1134	P111
GR1146	P107, P111
GR1203	P84
GR1204	P84, P85
GR1205	P84
GR1206	P84, P85
GR1207	P84, P85
GR1208	P84, P85
GR1290	P85
GR1292	P85
GR1293	P90, P91
GR1294	P90, P91
GR1295	P91
GR1296	P91
GR1297	P90
GR1298	P90
GR1301	P91
GR1327	P22
GR1363	P7, P85
GR1364	P7, P85
GR1397	P104
GR1405	P91
GR1406	P91
GR1407	P91
GR1408	P91
GR1409	P91
GR1410	P91
GR1411	P91
GR1412	P91
GR1413	P91
GR1414	P89
GR1415	P88
GR1417	P65
GR1428	P64
GR1465	P64, P67, P68, P81
GR1466	P71, P73, P75
GR1487	P22
GR1519	P67, P68
GR1521	P69
GR1522	P69
GR1523	P65
GR1524	P64
GR1533	P113
GR1535	P113
GR1540	P113
GR1541	P113
GR1542	P113
GR1543	P111, P113
GR1544	P113
GR1545	P113
GR1557	P90, P91
GR1559	P113
GR1561	P113
GR1566	P113
GR1567	P113
GR1568	P113
GR1569	P22
GR1570MPP	P118
GR1574	P113
GR1598	P66
GR1629	P89
GR1635	P71, P73
GR1678	P104
GR1778	P9
GR1790	P47
GR1796	P111
GR1798	P111
GR1800	P111
GR1801	P111
GR1803	P111
GR1804	P111
GR1805	P111
GR1806	P111
GR1808	P111
GR1809	P9
GR1812	P5
GR1813	P5, P35
GR1815	P5
GR1818	P5, P35
GR1819	P5, P35
GR1829	P35
GR1830	P5, P35
GR1831	P35
GR1835	P87
GR1836	P87
GR1837	P87
GR1838	P87
GR1839	P87

NUMERICAL INDEX

Part No.	Page
GR1843	P9
GR1846	P75
GR1894	P5, P35
GR1895	P5, P35
GR1896	P5, P35
GR1898	P5, P35
GR1899	P35
GR1900	P35

Part No.	Page

Part No.	Page