SH1

COMPONENTS

Precision Split-Hub Shaft Collar

Inch and Metric versions

SH1

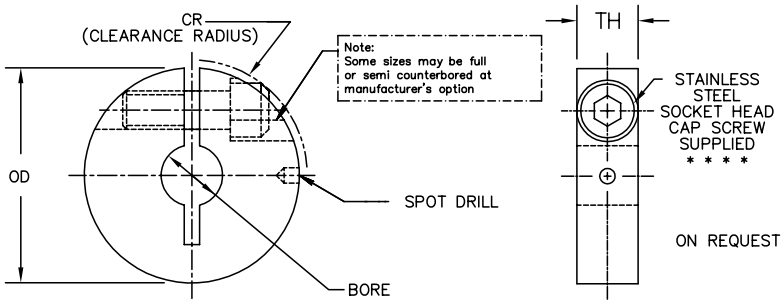

Tolerances	
.XX	±.016
.XXX	±.005
Bore	+.001

Suffix	Material	Finish
A	Aluminum 2024-T351	Chromic Acid Anodize
S	Stainless Steel 303	Clear Passivate

Part Number	Suffix		Bore	OD	TH	CR	Spot	Screw
SH1-1616.094	A	S	.094	.500	.16	.32	.06	3-48
SH1-1616.118	A	S	.118	.500	.16	.32	.06	3-48
SH1-1616.125	A	S	.125	.500	.16	.32	.06	3-48
SH1-1616.157	A	S	4mm	.500	.16	.32	.06	3-48
SH1-1616.188	A	S	.188	.500	.16	.32	.06	3-48
SH1-1812.181	A	S	4.6mm	.562	.125	.33	-	1-72
SH1-1812.188	A	S	.188	.562	.125	.33	-	1-72
SH1-1812.197	A	S	5mm	.562	.125	.33	-	1-72
SH1-1812.250	A	S	.250	.562	.125	.33	-	1-72
SH1-1815.125	A	S	.125	.562	.156	.34	-	2-56
SH1-1815.181	A	S	4.6mm	.562	.156	.34	-	2-56
SH1-1815.188	A	S	.188	.562	.156	.34	-	2-56
SH1-1815.197	A	S	5mm	.562	.156	.34	-	2-56
SH1-1815.250	A	S	.250	.562	.156	.34	-	2-56
SH1-1815.260	A	S	6.6mm	.562	.156	.34	-	2-56
SH1-2015.125	A	S	.125	.625	.156	.34	-	2-56
SH1-2015.157	A	S	4mm	.625	.156	.34	-	2-56
SH1-2015.181	A	S	4.6mm	.625	.156	.34	-	2-56
SH1-2015.188	A	S	.188	.625	.156	.34	-	2-56
SH1-2015.197	A	S	5mm	.625	.156	.34	-	2-56
SH1-2015.220	A	S	5.6mm	.625	.156	.34	-	2-56
SH1-2015.236	A	S	6mm	.625	.156	.34	-	2-56
SH1-2015.250	A	S	.250	.625	.156	.34	-	2-56
SH1-2015.260	A	S	6.6mm	.625	.156	.34	-	2-56
SH1-2015.276	A	S	7mm	.625	.156	.34	-	2-56
SH1-2019.181	A	S	4.6mm	.625	.19	.34	.07	4-40
SH1-2019.188	A	S	.188	.625	.19	.34	.07	4-40
SH1-2019.250	A	S	.250	.625	.19	.34	.07	4-40
SH1-2019.260	A	S	6.6mm	.625	.19	.34	.07	4-40
SH1-2418.250	---	S	.250	.750	.188	.41	-	4-40
SH1-2425.313	---	S	.313	.750	.250	.44	-	4-40
SH1-2814.250	---	S	.250	.875	.14	.46	-	2-56
SH1-2819.220	---	S	5.6mm	.875	.19	.48	-	4-40
SH1-2819.250	A	S	.250	.875	.19	.48	-	4-40
SH1-2819.260	A	S	6.6mm	.875	.19	.48	-	4-40
SH1-2819.299	A	S	7.6mm	.875	.19	.48	-	4-40

Part Number	Suffix		Bore	OD	TH	CR	Spot	Screw
SH1-2819.312	A	S	.312	.875	.19	.48	-	4-40
SH1-2819.339	A	S	8.6mm	.875	.19	.48	-	4-40
SH1-2819.375	A	S	.375	.875	.19	.48	-	4-40
SH1-2825.156	A	---	.156	.875	.250	.51	-	6-32
SH1-2825.157	A	---	4mm	.875	.250	.51	-	6-32
SH1-2825.188	A	S	.188	.875	.250	.51	-	6-32
SH1-2825.197	A	S	5mm	.875	.250	.51	-	6-32
SH1-2825.236	A	S	6mm	.875	.250	.51	-	6-32
SH1-2825.250	A	S	.250	.875	.250	.51	-	6-32
SH1-2825.260	A	S	6.6mm	.875	.250	.51	-	6-32
SH1-2825.276	A	S	7mm	.875	.250	.51	-	6-32
SH1-2825.281	A	S	.281	.875	.250	.51	-	6-32
SH1-2825.313	A	S	.313	.875	.250	.51	-	6-32
SH1-2825.315	A	S	8mm	.875	.250	.51	-	6-32
SH1-2825.339	A	S	8.6mm	.875	.250	.51	-	6-32
SH1-2825.375	A	S	.375	.875	.250	.51	-	6-32
SH1-3037.438	A	---	.438	.937	.37	.49	-	6-32
SH1-3625.375	A	S	.375	1.125	.25	.63	.19	8-32
SH1-3625.378	A	S	9.6mm	1.125	.25	.63	.19	8-32
SH1-3625.394	A	S	10mm	1.125	.25	.63	.19	8-32
SH1-3625.437	A	S	.437	1.125	.25	.63	.19	8-32
SH1-3625.457	A	S	11.6mm	1.125	.25	.63	.19	8-32
SH1-4032.250	A	---	.250	1.250	.32	.63	-	8-32
SH1-4032.375	A	S	.375	1.250	.32	.63	-	8-32
SH1-4032.394	A	S	10mm	1.250	.32	.63	-	8-32
SH1-4032.433	A	S	11mm	1.250	.32	.63	-	8-32
SH1-4032.437	A	S	.437	1.250	.32	.63	-	8-32
SH1-4032.457	A	S	11.6mm	1.250	.32	.63	-	8-32
SH1-4032.472	A	S	12mm	1.250	.32	.63	-	8-32
SH1-4032.500	A	S	.500	1.250	.32	.63	-	8-32
SH1-4032535	A	S	13.6mm	1.250	.32	.63	-	8-32
SH1-4032.551	A	S	14mm	1.250	.32	.63	-	8-32
SH1-4032.562	A	S	.562	1.250	.32	.63	-	8-32
SH1-4032.591	A	S	15mm	1.250	.32	.63	-	8-32
SH1-4032.625	A	S	.625	1.250	.32	.63	-	8-32
SH1-4032.630	A	S	16mm	1.250	.32	.63	-	8-32