12" ALUMINUM TRANSPORT

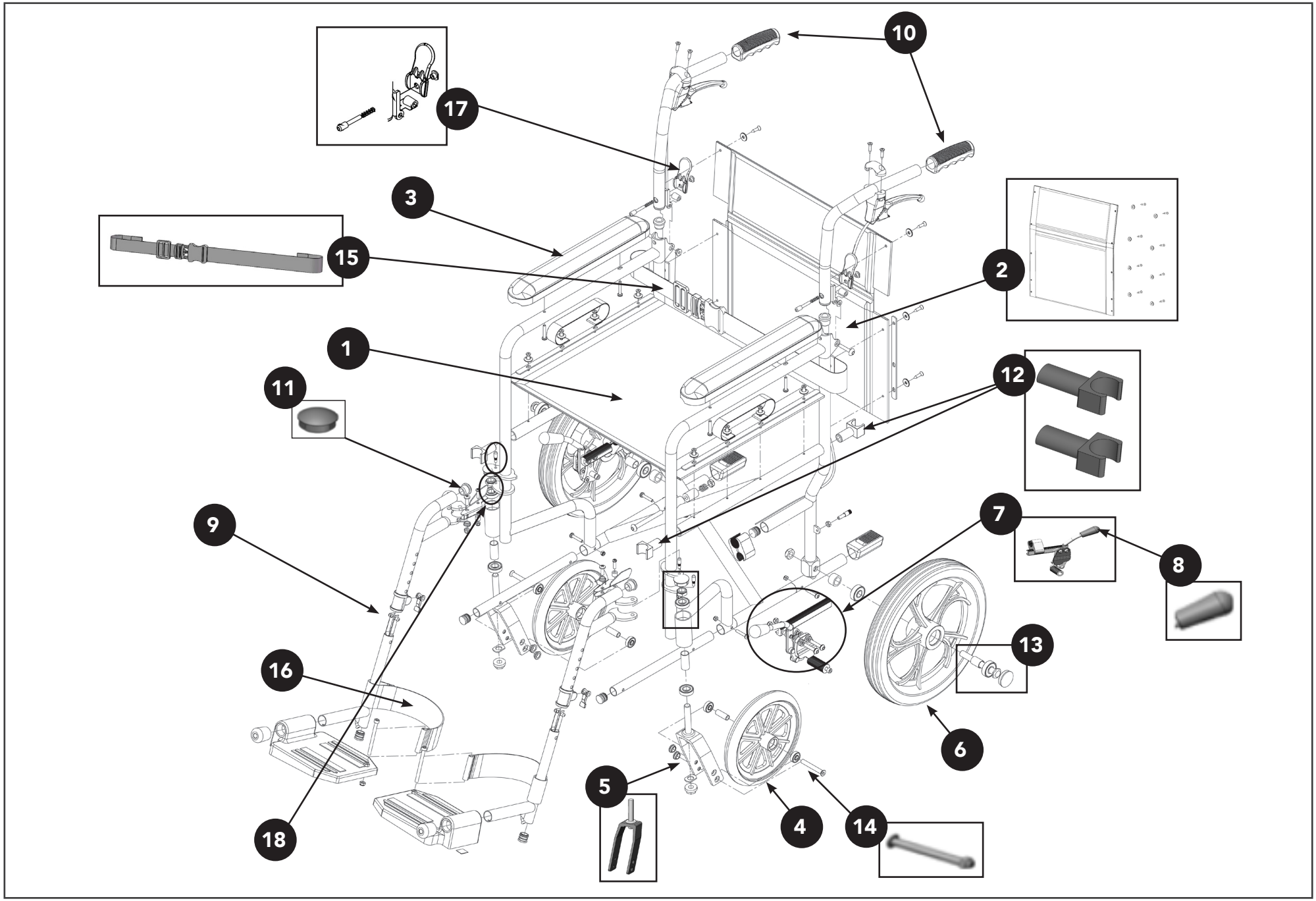

12” ALUMINUM TRANSPORT

Fig.	Description	Part No.
1	Probasics Transport Chair 19" Seat Upholstery w/Hardware	X1TCAS01
2	Probasics Transport Chair 19" Back Upholstery w/Hardware	X1TCAS03
3	Probasics Transport Chair Armrest Pad, Full-Length w/Hardware	X1TCAS05
4	Probasics Transport Chair Front Caster w/Bearing	X1TCAS07
5	Probasics Transport Chair Alum. Front Caster Fork w/Stem Bearings	X1TCAS10
6	Probasics Transport Chair 12" Rear Wheel w/Bearings	X1TCAS13
7	Probasics Transport Chair 12" Wheel Lock Assembly	X1TCAS15
8	Probasics Transport Chair Wheel Lock Tip	X1TCAS17
9	Probasics Transport Chair 12" Wheel Swing-Away Footrest	X1TCAS22
10	Probasics Transport Chair Hand Grips, Pair	X1TCAS24
11	Probasics Transport Chair Stem Dust Cap for Fork	X1TCAS25
12	Probasics Transport Chair Aluminum TC Seat Rail Guide	X1TCAS27
13	Probasics Transport Chair 12" Rear Axle Bolt w/Nut	X1TCAS30
14	Probasics Transport Chair Caster Axle Bolt w/Nut	X1TCAS32
15	Probasics Transport Chair Seat Belt	X1TCAS33
16	Probasics Transport Chair Heel Loop	X1TCAS34
17	ProBasics Transport Chair Folding Back Hinge w/Hardware	X1TCAS35
18	ProBasics Transport Chair Footrest Pins (Pair)	X1TCAS37